5/20/26 15:39 JCLEMENS02 C:\USERSJCLEMENS02\BOX\0517_TNF_NAMP\6260261010602_NAMP\IMPLEMENTATION\METHOD_ACCOMP\IAS REQUISITION\SAND POND 5-20-26.DWG;

United States Department of Agriculture
Forest Service

(R05) PACIFIC SOUTHWEST
TAHOE NATIONAL FOREST
SIERRA COUNTY, CALIFORNIA
YUBA RIVER RANGER DISTRICT
SAND POND BOARDWALK REPLACEMENT

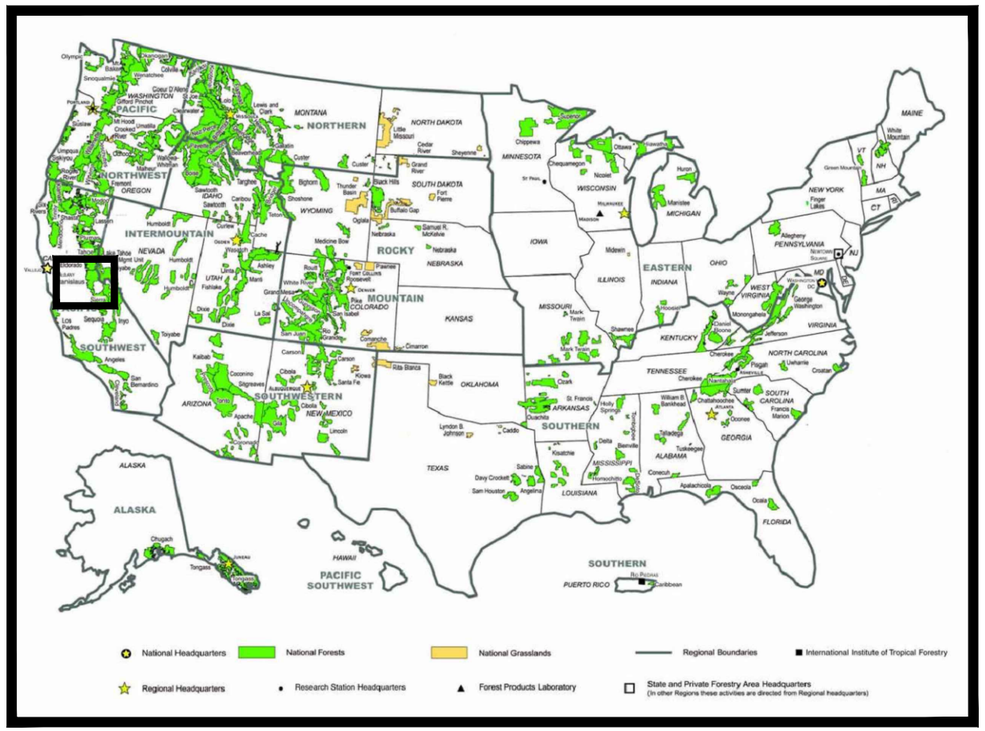

PROJECT LOCATION



VICINITY MAP

TRAVEL DIRECTIONS:

DIRECTIONS FROM DOWNIEVILLE: HEAD EAST ON HWY 49 17.5 MI. TURN LEFT ON GOLD LAKE HIGHWAY. CONTINUE FOR 1.3 MILES. TURN LEFT ON PACKER LAKE ROAD FOR 0.3 MILES. CONTINUE STRAIGHT ONTO SARDINE LAKE ROAD. CONTINUE 0.5 MILES TO ARRIVE AT SAND POND ON THE LEFT.

LATITUDE: 39.617000293221615

LONGITUDE: -120.62241150101839

INDEX OF SHEETS

SHEET	SHEET TITLE	DATE
G-01	COVER SHEET	
G-02	VICINITY MAP	
G-03	GENERAL NOTES AND SCHEDULE OF ITEMS	
C-01	PROJECT TRAIL LOG AND PHOTOS	
C-02	BOARDWALK DETAILS 1	
C-03	BOARDWALK DETAILS 2	

RECOMMENDED BY:

JENNIFER CLEMENS — Digitally signed by JENNIFER CLEMENS Date: 2026.05.20 15:41:14 -07'00'
DESIGN ENGINEER — DATE

JOE CHAVEZ — Digitally signed by JOE CHAVEZ Date: 2026.05.21 09:24:20 -07'00'
TRAIL MANAGER — DATE

APPROVED:

AMBER NELSON — Digitally signed by AMBER NELSON Date: 2026.05.21 10:01:30 -07'00'
DISTRICT RANGER — DATE

TEMOC RIOS — Digitally signed by TEMOC RIOS Date: 2026.05.21 09:36:59 -07'00'
FOREST ENGINEER — DATE

SAND POND BOARDWALK VICINITY MAP

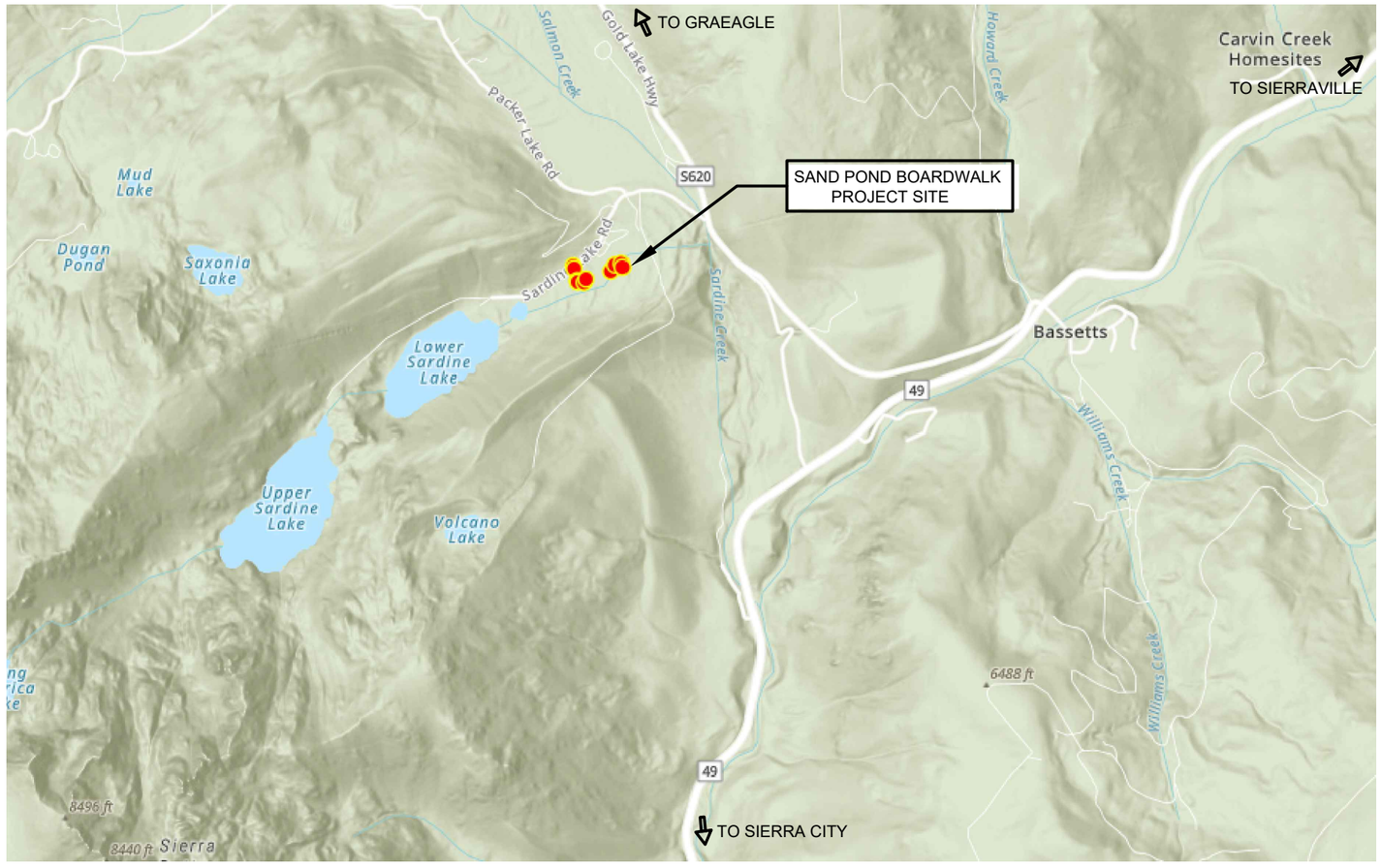

United States Department of Agriculture
Forest Service

(R5)
PACIFIC SOUTHWEST REGION

PROJECT NAME

SAND POND BOARDWALK

TAHOE NATIONAL FOREST

YUBA RIVER RANGER DISTRICT

DRAWING TITLE

VICINITY MAP

DATE
3/25/2024

ARCHIVE NO.
ARCHIVE_NUMBER

DESIGNER
TAHOE ENGINEERING

DRAWN
J. CLEMENS

CHECKED
C. VILLA

PROJECT NO.

DWG SHEET NO.
G-02

SHEET 2 OF 6

5/20/26 15:39 JCLEMENS02 C:\USERS\JCLEMENS02\BOX\0517_TNF_NAMP\6260261010602_NAMP\IMPLEMENTATION\METHOD_ACCOMP\IAS REQUISITION\SAND POND 5-20-26.DWG;

SCHEDULE OF ITEMS				
Item No.	Description	Quantities	Method of Measure	Total Quantity
90701	Mobilization	CQ	Lump Sum	1
91203	Clearing and Grubbing	CQ	Lump Sum	1
93801	Boardwalk All Materials and Complete Installation	CQ	Lineal Feet	1100
96202	Bridge All Materials and Complete Intallation	CQ	Lump Sum	1
98202	Erosion Control	CQ	Lump Sum	1
98301	Removal of Improvements- Existing Bridge, 200 LF Existing Boardwalk and 2 Lumber Debris Piles	CQ	Lump Sum	1
99101	Crushed Aggregate Surface Course, Grading B Delivery and Stockpile Only	CQ	Cubic Yard	20

TIMBER NOTES:

1. DECK PLANKS, 6X6 POSTS, SILLS, AND CURBS SHALL BE DOUGLAS FIR- LARCH, NO. 1, S4S.
2. RUN PLANKS AND END PLANKS SHALL BE DOUGLAS FIR- LARCH NO.2 OR BETTER, ROUGH.
3. MAXIMUM MOISTURE CONTENT FOR TIMBER SHALL BE 19%. ALL TIMBER EXCEPT RAILS AND RUN PLANKS SHALL BE PRESSURE TREATED WITH COPPER NAPHTHENATE IN HEAVY OIL, IN ACCORDANCE WITH AASHTO M133, AWPA AND AWPA U1-09. USE CATEGORY UC4B.
4. TREATED MATERIALS SHALL FOLLOW THE POST TREATMENT REQUIREMENTS SUMMARIZED IN THE “BEST MANAGEMENT PRACTICES FOR THE USE OF TREATED WOOD IN AQUATIC ENVIRONMENTS” (WWPI 1196), TO ENSURE ALL SURFACES ARE FREE OF EXCESS PRESERVATIVE AND CHEMICALS ARE ADEQUATELY FIXATED IN THE WOOD.
5. ALL WOOD MEMBERS SHALL BE CUT AND DRILLED BEFORE TREATMENT. WHEN MISCELLANEOUS FIELD DRILLED HOLES AND CUTS ARE REQUIRED BECAUSE OF MISALIGNMENT, THEY MUST BE APPROVED BY THE ENGINEER.
6. ALL FIELD DRILLED HOLES AND CUTS SHALL BE TREATED WITH TWO APPLICATIONS OF COPPER NAPHTHENATE 2% SOLUTION.
7. LEAD HOLES ARE REQUIRED FOR ALL BOLTS AND SCREWS. DRIVING OF LAG BOLTS AND SCREWS WILL NOT BE PERMITTED.
8. CUT BEAMS SO THEY FIT FLUSH AND TIGHT TO THE ADJOINING MEMBER.
9. ALL FASTENERS SHALL BE GALVANIZED.

CONTRACTOR RESPONSIBLE FOR ANY UTILITY LINE LOCATES AND ANY DAMAGED DONE TO UTILITY LINES WHEN INSTALLING SIGN POSTS OR ANY OTHER EARTHWORK INVOLVED WITH SIGN INSTALLATION

GENERAL NOTES:

1. PERFORM CONSTRUCTION IN CONFORMANCE WITH THE STANDARD SPECIFICATIONS FOR CONSTRUCTION OF TRAILS AND TRAIL BRIDGES ON FOREST SERVICE PROJECTS, US CUSTOMARY UNITS, EXCEPT AS MODIFIED BY SUPPLEMENTAL SPECIFICATIONS AND THE FOREST SERVICE TRAIL ACCESSIBILITY GUIDELINES (FSTAG) 2013 CLAUSES IN THE CONTRACT DOCUMENT OR THE PLANS.
2. CONTRACTOR SHALL PROVIDE ALL MATERIALS, LABOR, AND EQUIPMENT
3. WATER FOR FIRE PREVENTION & SUPPRESSION REQUIREMENTS UNDER THE CONTRACT, AS WELL AS FOR USE WITH CONSTRUCTION ACTIVITIES, MAY BE OBTAINED FROM IDENTIFIED WATER SOURCES, SHOWN IN WORK SHEETS AND ON VICINITY MAP, AT THE PROJECT SITE. ALL WATER WITHDRAWALS FOR FIRE OR CONSTRUCTION SHALL ABIDE BY CURRENT NMFS WATER DRAFTING GUIDELINES. AT A MINIMUM, ANY WATER WITHDRAWAL IN ACTIVE STREAMS WITH FISH PRESENT SHALL HAVE SCREENED INTAKES WITH A MAXIMUM SCREEN OPENING OF 3/32 INCH, MAXIMUM INTAKE VELOCITY OF 0.4 FEET PER SECOND AND WILL NOT REDUCE STREAM FLOW BY MORE THAN 10% BY VISUAL MEASURE. WATER WITHDRAWAL FROM ANY OTHER SOURCE SHALL BE APPROVED IN WRITING, PRIOR TO USE, BY THE CO.
4. PRIOR TO DIGGING, CALL "DIG SAFELY CALIFORNIA" 811. LOCATING AND PROTECTION OF ALL UTILITIES (PUBLIC & PRIVATE) IS THE RESPONSIBILITY OF THE CONTRACTOR.
5. CONTRACTING OFFICERS APPROVAL IS NEEDED WITH A MINIMUM OF 72 HRS NOTICE PRIOR TO THE PLACEMENT OF THE FOLLOWING ITEMS: BEDDING OR LEVELING COURSE OF ANY STRUCTURE.
6. REMOVE ALL CONSTRUCTION RELATED REFUSE FROM GOVERNMENT LAND PRIOR TO FINAL ACCEPTANCE.
7. REPAIR ANY DAMAGE DUE TO CONTRACTOR'S OPERATIONS, INSIDE OR OUTSIDE THE PROJECT BOUNDARY, AT THE CONTRACTOR'S EXPENSE, PRIOR TO FINAL ACCEPTANCE.
8. CONFINE CONSTRUCTION EQUIPMENT TO THE PROJECT AND STAGING AREAS UNLESS OTHERWISE SHOWN ON THE PLANS OR APPROVED BY THE CO.
9. STORING OF ALL EQUIPMENT ON GOVERNMENT LANDS WILL BE AT THE CONTRACTOR'S RISK AND AT A LOCATION APPROVED BY THE CO.
10. CONSTRUCTION TOLERANCE IS 'A' UNLESS OTHERWISE NOTED ON THE DRAWINGS.
11. ALL SLASH, DEBRIS, AND WASTE MATERIAL SHALL BE DISPOSED OF OFF NFS LANDS
12. THE SUBMITTED TRAFFIC CONTROL PLAN SHALL INCLUDE METHODS TO WARN PUBLIC TRAFFIC OF ROAD WORK ACTIVITIES. ALL CONSTRUCTION SIGNS SHALL MEET CURRENT MUTCD REQUIREMENTS.
13. UNLESS NOTED ELSEWHERE, WATER SOURCE WILL BE CONTRACTOR PROVIDED OFF OF NFS LANDS.
14. FOREST SERVICE ROADS SHALL NOT BE CLOSED TO TRAFFIC.
15. ALL EQUIPMENT SHALL BE WASHED PRIOR TO USE ON THIS PROJECT AND SHALL BE INSPECTED PRIOR TO USE TO VERIFY CLEAN AND WEED FREE STATE.
16. THE CONTRACTOR SHALL PERFORM ALL WORK BETWEEN THE HOURS OF 7:00 AM AND 6:00 PM MONDAY THROUGH FRIDAY. NO WORK SHALL BE PERFORMED ON WEEKENDS OR FEDERAL HOLIDAYS WITHOUT PRIOR APPROVAL FROM THE CO.
17. CADOT 1-1/2" AB AGGREGATE MAY BE SUBSTITUTED FOR USFS CLASS F SURFACING?
18. FOLLOW STATE OF CALIFORNIA BEST MANAGEMENT PRACTICES (BMP) ACCORDING TO THE CADEQ
19. TRAIL WILL BE CLOSED TO PUBLIC DURING CONSTRUCTION HOWEVER CONTRACTOR IS RESPONSIBLE FOR PUBLIC SAFETY.

ABBREVIATIONS:
NFS - NATIONAL FOREST SYSTEM CO - CONTRACTING OFFICER FS - FOREST SERVICE

FSSS - FOREST SERVICE SUPPLEMENTAL SPECIFICATIONS

United States Department of Agriculture
Forest Service

(R5)
PACIFIC SOUTHWEST REGION

PROJECT NAME

SAND POND BOARDWALK

TAHOE NATIONAL FOREST

YUBA RIVER RANGER DISTRICT

DRAWING TITLE

SCHEDULE OF ITEMS AND GENERAL NOTES

DATE
3/25/2024

ARCHIVE NO.
ARCHIVE_NUMBER

DESIGNER
TAHOE ENGINEERING

DRAWN
J. CLEMENS

CHECKED
C. VILLA

PROJECT NO.

DWG SHEET NO.
G-03

SHEET 3 OF 6

5/20/26 15:39 JCLEMENS02 C:\USERS\JCLEMENS02\BOX\0517_TNF_NAMP\6260261010602_NAMP\IMPLEMENTATIONMETHOD_ACCOMPLIAS REQUISITION\SAND POND 5-20-26.DWG;

TRAIL LOG			
Station	Description of Work	x	y
0+00	Beginning of Project- Begin Boardwalk Construction	-120.6184678	39.6187374
2+00	Begin Bridge Replacement	-120.618288	39.61820611
2+25	End Bridge Replacement- Resume Boardwalk Construction	-120.6182581	39.61815279
2+31	End Boardwalk- Begin Gravel Section	-120.6182615	39.61814177
3+61	End Gravel Section- Resume Boardwalk Construction	-120.6178929	39.61811651
4+29	Install Accessible Passing Space	-120.6177761	39.6182655
8+64	Install Accessible Passing Space	-120.6163356	39.61862063
10+00	Install Accessible Passing Space	-120.6160927	39.61889451
11+10	Install Accessible Passing Space	-120.6157299	39.61896482
11+83	End Boardwalk- End of Project	-120.6156607	39.61879736

DESCRIPTION OF WORK LOG



EXISTING 10FT X 10 FT LUMBER PILE TO BE REMOVED



EXISTING 15 FT X 15 FT LUMBER PILE TO BE REMOVED



EXISTING BRIDGE TO BE REMOVED



EXISTING TRAIL ALIGNMENT



EXISTING TRAIL ALIGNMENT



EXISTING BOARDWALK SECTION (TYP.) TO BE REMOVED

United States Department of Agriculture
Forest Service

(R5)
PACIFIC SOUTHWEST REGION

PROJECT NAME

SAND POND BOARDWALK

TAHOE NATIONAL FOREST

YUBA RIVER RANGER DISTRICT

DRAWING TITLE

PROJECT TRAIL LOG AND PHOTOS

DATE
3/25/2024

ARCHIVE NO.
ARCHIVE_NUMBER

DESIGNER
TAHOE ENGINEERING

DRAWN
J.CLEMENS

CHECKED
C. VILLA

PROJECT NO.

DWG SHEET NO.
C-01

SHEET 4 OF 6

5/20/26 15:39 JCLEMENS02 C:\USERS\JCLEMENS02\BOX\0517_TNF_NAMP\6260261010602_NAMP\IMPLEMENTATION\METHOD_ACCOMP\IAS REQUISITIONS\SAND POND 5-20-26.DWG;

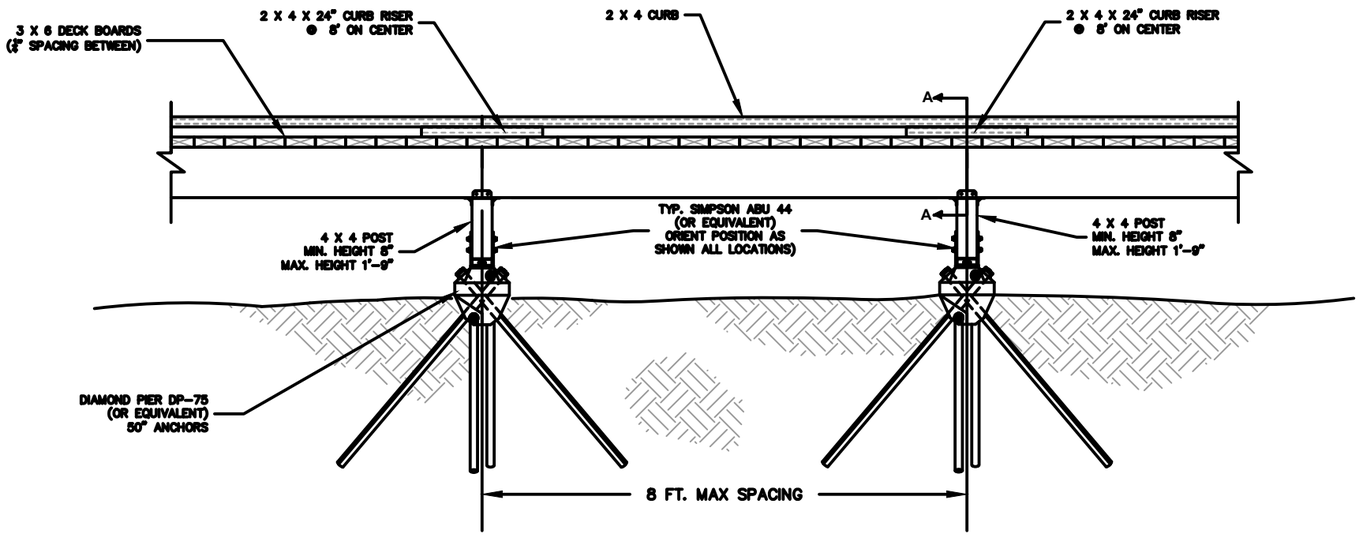

BOARDWALK PROFILE DETAILS
N.T.S.

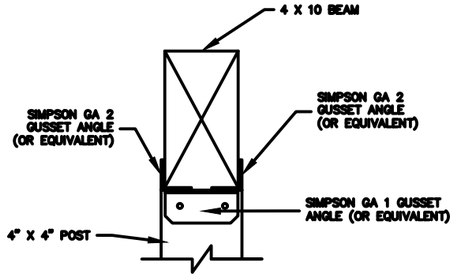

SECTION A-A (N.T.S.)
(DECK NOT SHOWN FOR CLARITY)

NOTES:

TIMBER TO BE PRESSURE TREATED. SEE TIMBER NOTES SHEET G-03.

ALL FASTENERS SHALL BE GALVANIZED.

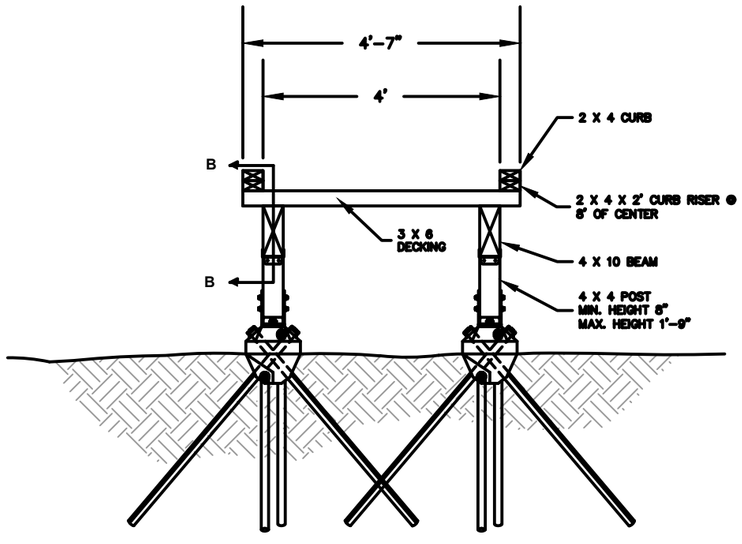

BOARDWALK SECTION DETAILS
N.T.S.

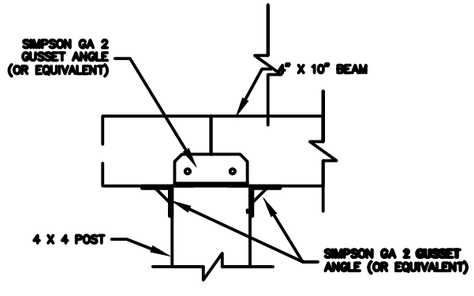

SECTION B-B (N.T.S.)
(DECK NOT SHOWN FOR CLARITY)

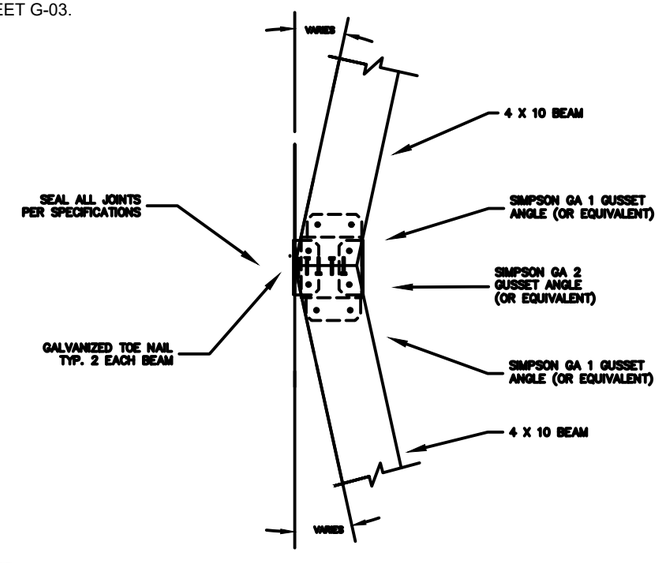

BOARDWALK JOINT PLAN VIEW (N.T.S.)
(DECK & PIER NOT SHOWN FOR CLARITY)

United States Department of Agriculture
Forest Service

(R5)
PACIFIC SOUTHWEST REGION

PROJECT NAME

SAND POND BOARDWALK

TAHOE NATIONAL FOREST

YUBA RIVER RANGER DISTRICT

DRAWING TITLE

BOARDWALK DETAILS 1

DATE
3/25/2024

ARCHIVE NO.
ARCHIVE_NUMBER

DESIGNER
TAHOE ENGINEERING

DRAWN
J. CLEMENS

CHECKED
C. VILLA

PROJECT NO.

DWG SHEET NO.
C-02

SHEET 5 OF 6

5/20/26 15:39 JCLEMENS02 C:\USERS\JCLEMENS02\BOX\0517_TNF_NAMP\6260261010602_NAMP\IMPLEMENTATION\METHOD_ACCOMP\IAS REQUISITION\SAND POND 5-20-26.DWG;

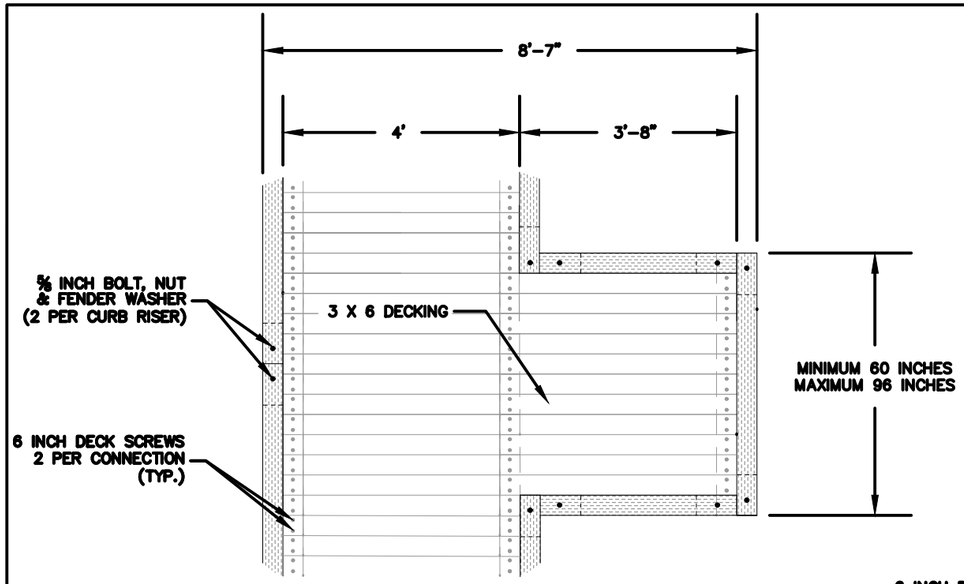

ACCESSIBLE PASSING SPACE PLAN VIEW
N.T.S.

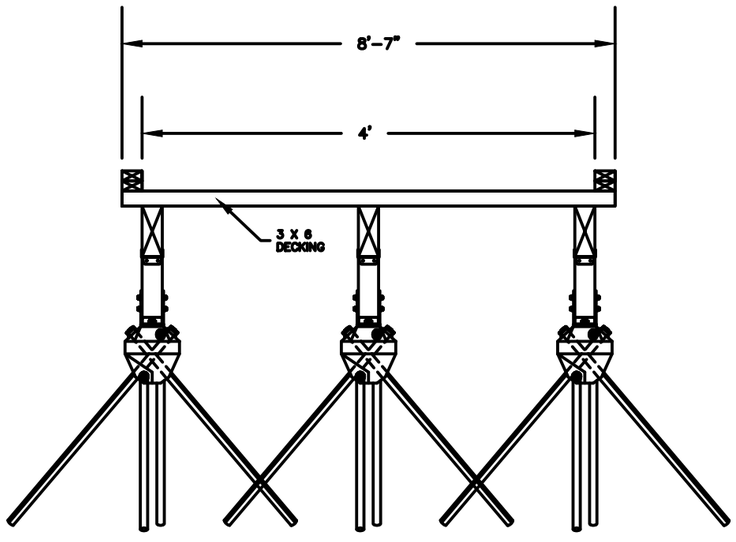

ACCESSIBLE PASSING SPACE SECTION DETAILS
N.T.S.

NOTES:

ACCESSIBLE PASSING SPACES ARE INCIDENTAL TO PAY ITEM 938

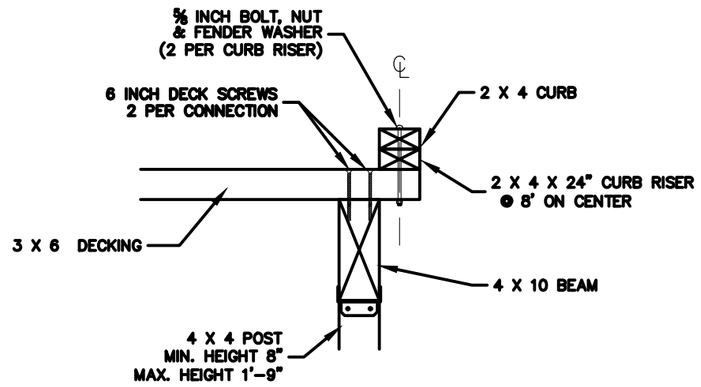

BOARDWALK DECK AND CURB DETAILS (N.T.S.)
PIERS NOT SHOWN

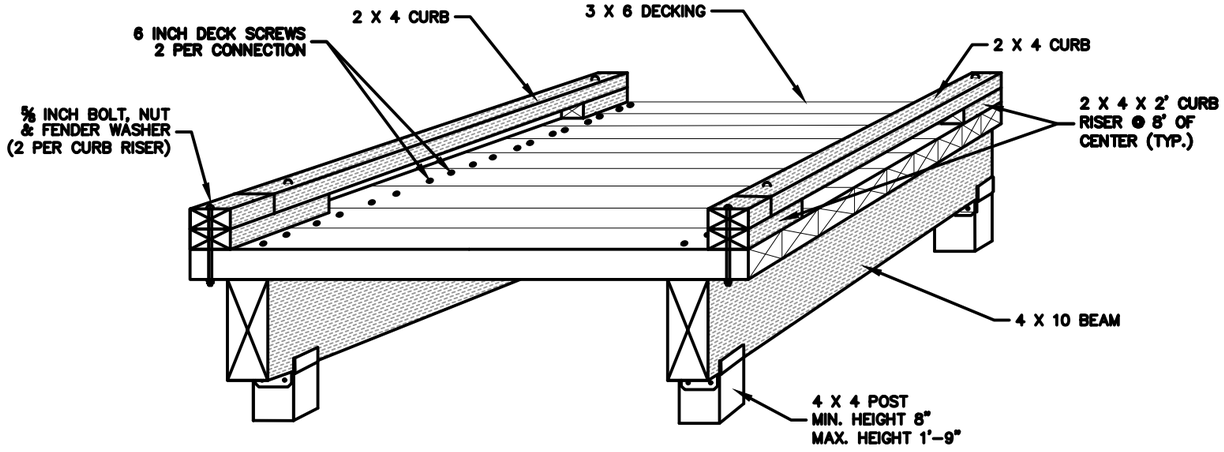

BOARDWALK PERSPECTIVE VIEW (N.T.S.)
PIERS NOT SHOWN

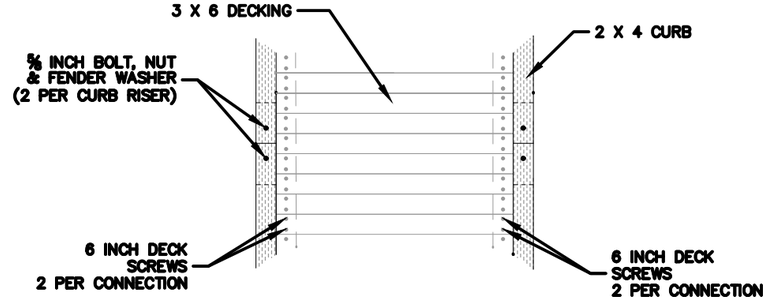

BOARDWALK DECK AND CURB PLAN VIEW (N.T.S.)
PIERS NOT SHOWN

United States Department of Agriculture
Forest Service

(R5)
PACIFIC SOUTHWEST REGION

PROJECT NAME

SAND POND BOARDWALK

TAHOE NATIONAL FOREST

YUBA RIVER RANGER DISTRICT

DRAWING TITLE

BOARDWALK DETAILS 2

DATE
3/25/2024

ARCHIVE NO.
ARCHIVE_NUMBER

DESIGNER
TAHOE ENGINEERING

DRAWN
J.CLEMENS

CHECKED
C. VILLA

PROJECT NO.

DWG SHEET NO.
C-03

SHEET 6 OF 6

5/20/26 15:39 JCLEMENS02 C:\USERS\JCLEMENS02\BOX\0517_TNF_NAMP\6260261010602_NAMP\IMPLEMENTATION\METHOD_ACCOMP\IAS REQUISITION\SAND POND 5-20-26.DWG;