AMENDMENT OF SOLICITATION/MODIFICATION OF CONTRACT

1. CONTRACT ID CODE	PAGE	OF	PAGES
	1		2

2. AMENDMENT/MODIFICATION NUMBER	3. EFFECTIVE DATE	4. REQUISITION/PURCHASE REQUISITION NUMBER	5. PROJECT NUMBER *(If applicable)*
0004	09/14/2026		

6. ISSUED BY CODE PDS

NPS, DSC Contracting Services Div
1 Denver Federal Center, Building 50
P.O. Box 25287
Denver CO 80225-0287

7.ADMINISTERED BY *(If other than Item 6)* CODE

8. NAME AND ADDRESS OF CONTRACTOR *(Number, street, county, State and ZIP Code)*

CODE FACILITY CODE

(X) 9A. AMENDMENT OF SOLICITATION NUMBER
140P2026R0078

[X] 9B. DATED *(SEE ITEM 11)*
08/14/2026

10A. MODIFICATION OF CONTRACT/ORDER NUMBER

[ ]

10B. DATED *(SEE ITEM 13)*

11. THIS ITEM ONLY APPLIES TO AMENDMENTS OF SOLICITATIONS

[X] The above numbered solicitation is amended as set forth in Item 14. The hour and date specified for receipt of Offers [X] is extended. [ ] is not extended.

Offers must acknowledge receipt of this amendment prior to the hour and date specified in the solicitation or as amended, by one of the following methods: (a) By completing items 8 and 15, and returning 1 copies of the amendment; (b) By acknowledging receipt of this amendment on each copy of the offer submitted; or (c) By separate letter or electronic communication which includes a reference to the solicitation and amendment numbers. FAILURE OF YOUR ACKNOWLEDGMENT TO BE RECEIVED AT THE PLACE DESIGNATED FOR THE RECEIPT OF OFFERS PRIOR TO THE HOUR AND DATE SPECIFIED MAY RESULT IN REJECTION OF YOUR OFFER. If by virtue of this amendment you desire to change an offer already submitted, such change may be made by letter or electronic communication, provided each letter or electronic communication makes reference to the solicitation and this amendment, and is received prior to the opening hour and date specified.

12. ACCOUNTING AND APPROPRIATION DATA *(If required)*

13. THIS ITEM APPLIES ONLY TO MODIFICATIONS OF CONTRACTS/ORDERS. IT MODIFIES THE CONTRACT/ORDER NUMBER AS DESCRIBED IN ITEM 14.

CHECK ONE

[ ] A. THIS CHANGE ORDER IS ISSUED PURSUANT TO: *(Specify authority)* THE CHANGES SET FORTH IN ITEM 14 ARE MADE IN THE CONTRACT ORDER NUMBER IN ITEM 10A.

[ ] B. THE ABOVE NUMBERED CONTRACT/ORDER IS MODIFIED TO REFLECT THE ADMINISTRATIVE CHANGES *(such as changes in paying office, appropriation data, etc.)* SET FORTH IN ITEM 14, PURSUANT TO THE AUTHORITY OF FAR 43.103(b).

[ ] C. THIS SUPPLEMENTAL AGREEMENT IS ENTERED INTO PURSUANT TO AUTHORITY OF:

[ ] D. OTHER *(Specify type of modification and authority)*

E. IMPORTANT: Contractor [ ] is not [ ] is required to sign this document and return _____ copies to the issuing office.

14. DESCRIPTION OF AMENDMENT/MODIFICATION (*Organized by UCF section headings, including solicitation/contract subject matter where feasible.)*

See continuation page

Except as provided herein, all terms and conditions of the document referenced in Item 9A or 10A, as heretofore changed, remains unchanged and in full force and effect.

15A. NAME AND TITLE OF SIGNER *(Type or print)*		16A. NAME AND TITLE OF CONTRACTING OFFICER *(Type or print)*	
		Vicki Freese-supler	
15B. CONTRACTOR/OFFEROR	15C. DATE SIGNED	16B. UNITED STATES OF AMERICA	16C. DATE SIGNED
(Signature of person authorized to sign)		*(Signature of Contracting Officer)*	

Previous edition unusable

STANDARD FORM 30 (REV. 11/2016)
Prescribed by GSA FAR (48 CFR) 53.243

ITEM NO. (A)	SUPPLIES/SERVICES (B)	QUANTITY (C)	UNIT (D)	UNIT PRICE (E)	AMOUNT (F)
	YELL 326141 - Yellowstone Modular Housing, Yellowstone National Park, Wyoming The purpose of this Amendment is to provide the following information: 1. Provide the final set of responses to Q&A's received. 2. To extend the proposal submission date from September 17, 2026 to September 28, 2026 at 2:00 p.m. Mountain Time. 3. To provide for a revised Bid Schedule - see attached. 4. To provide for revised drawing sheet as follows: a. Remove Drawing Sheets 1 of 94, Sheet C5.02, C5.05, and C7.06 and replace with Drawing Sheet 1 of 94, Sheet C5.02 Amd 4, Sheet C5.05 Amd 4 and Sheet C7.06 Amd 4. b. Remove Drawing Sheet E1-E6, E9-E10 and replace with Drawing Sheet E1-E6 Amd 4 and Drawing Sheets E9-E10 Amd 4. 5. To provide a fillable Attachment 7 - Limitations on Subcontracting Report. All other terms and conditions of the solicitation remain unchanged and in full force and effect.				

Date Answered	Question No.	Amendment No.	Detail (**)	Description (*)	Response
8/27/2026	1	2		Prime Contractor Licensing---FAR 52.236-7 requires the Contractor to obtain all necessary licenses and permits, and Drawing C1.01 states that the Contractor must maintain valid Wyoming and Montana contractor licenses. We understand that a general contractor license is not generally required for construction performed within Yellowstone National Park; however, the reference to Wyoming and Montana contractor licenses in Drawing C1.01 is unclear as to whether it applies to the Prime Contractor or to licensed trades performing work under the contract. Please confirm whether the licensing requirement in Drawing C1.01 is intended to apply only to trades for which state or local licensing is required (e.g., electrical, plumbing, or other regulated trades), or whether NPS requires the Prime/General Contractor itself to hold a contractor or general contractor license or registration in Wyoming, Montana, Park County, or any other jurisdiction associated with the Canyon, Mammoth, or Northeast Entrance work sites.	There is no federal regulation/requirement for contractors or subcontractors to be licensed; however, the applicable state and local governments regulate professional and trade licenses (such as electrical, plumbing, or general construction); therefore, all contractors and/or subcontractors must comply with applicable regulations.
8/27/2026	2	2		Section 01 31 00 identifies Government-furnished permits and approvals, including the Wyoming/Montana DEQ water and wastewater permits and the Canyon Section 404/401 approvals. Based on our review of the Contract Documents and the project's location within Yellowstone National Park, our understanding is that NPS will administer and/or obtain the permits, inspections, and approvals required for the Work, including those that would ordinarily be administered through state or local authorities. Please confirm this understanding and provide the following: Existing Permits and Approvals: Confirm the permits and approvals that have already been obtained by NPS for this project Permit Validity: Please identify any existing permit or approval that may require renewal, extension, reinstatement, modification, or other action during the anticipated construction period, and confirm whether NPS will administer the required action. NPS-Administered Permitting and Inspections: Please confirm that NPS will administer the applicable building, electrical, plumbing, mechanical, fire/life-safety, inspection, and occupancy/final acceptance processes for the Work, including those that would otherwise typically fall under state, county, or local jurisdiction	Confirmed

Date Answered	Question No.	Amendment No.	Detail (**)	Description (*)	Response
8/27/2026	3	2		Factor 3 requests an “MS Project Gantt Chart format.” Please confirm whether an Oracle Primavera P6 schedule presented in Gantt Chart format is acceptable, provided it includes all required activities, durations, logic, milestones, predecessor relationships, and critical path.	Yes that is acceptable
8/27/2026	4	2		Please confirm that the Product Binder is a separate Factor 1 deliverable and does not count toward the 15-page Concept Narrative limit.	Confirmed
8/27/2026	5	2		Both Factors 2 and 4 request organizational charts. Please confirm whether one comprehensive project organizational chart meeting both requirements may be submitted under Factor 4 and referenced in Factor 2, or whether separate charts are required.	Only one organizational chart will be required.
8/27/2026	6	2		Since we are licensed to install sprinklers, I assume it would be fine for us to install those during the build process?	Either method is acceptable either during installation or during the build process.
8/27/2026	7	2		Please provide the available electronic CAD files for the civil/site design at Mammoth Hot Springs, Canyon Village, and Northeast Entrance, including existing topographic survey information and proposed grading information. If available, please also provide existing-ground and proposed-finish-grade Civil 3D surfaces and/or LandXML surface files with the associated civil DWG files. Please confirm that electronic files provided for proposal use are informational and that the issued Contract Drawings remain controlling.	These will be provided after contract award
9/2/2026	8	3		Please provide available static and residual water-pressure information, flow data, and any available recent test information for the existing water systems serving the three project sites. Please also confirm the existing pipe size/material and intended tie-in conditions where those conditions are not fully established by the Contract Documents, so Offerors may develop a consistent proposal basis.	Project Reports including as much of this information as is available have been attached to this solicitation amendment.
9/2/2026	9	3		Please clarify the proposal basis for locating and reconnecting the existing sanitary service associated with the Northeast Entrance fourplex where the existing service location is not positively established on the Contract Drawings. Please confirm whether dye testing, exploratory excavation, or other investigative work is anticipated and identify the bidding assumption Offerors should use if the service cannot be located as shown.	Although not shown on the CDs, old construction drawings indicate that the 4-Plex discharges into the SSMH-D1. Base your pricing on the assumption that this is true, and that no work will be required to re-connect the 4-Plex to the existing sanitary sewer system.
9/2/2026	10	3		Please clarify the intended proposal basis for Canyon utility work in areas where existing utility locations, profiles, or connection conditions are approximate or require field fit. Please identify any Government-held survey, record drawings, or utility information not included in the solicitation that can be provided to Offerors, and confirm the baseline condition to be carried for proposal pricing.	Consider the Construction Drawings to be accurate as drawn, and price the work accordingly. If you have specific questions about any particular items, ask them.

Date Answered	Question No.	Amendment No.	Detail (**)	Description (*)	Response
9/2/2026	11	3		The Contract Documents provide that certain clean soil, rock, boulders, logs, and felled trees may remain NPS property and require Contractor hauling to Government-designated locations. For consistent proposal pricing, please identify the anticipated receiving, stockpile, quarry, or delivery locations for NPS-retained materials generated at each project site, or provide a maximum one-way haul distance Offerors should include.	The Government maintains salvage pits for desirable materials within 10 miles of both the Canyon and Mammoth construction areas. Do not rely on being able to dispose of any materials in these pits. The Government will not require delivery of any waste materials from the Northeast Entrance construction to Government-maintained pits.
9/2/2026	12	3		Please identify the Government-designated or anticipated disposal/delivery locations for woody slash, stumps, brush, and other green waste generated at Mammoth, Canyon, and Northeast Entrance. Please clarify whether NPS has an approved in-Park location for disposal or processing of these materials or whether the Contractor is responsible for locating and paying for an approved offsite disposal facility. If locations are not presently designated, please provide the haul-distance assumption Offerors should use.	There is not a Government-owned disposal area for the materials listed. Offerors are responsible for locating legal offsite disposal areas and the associated hauling and disposal costs.
9/2/2026	13	3		The Contract Documents require the Construction Access Plan to identify staging areas and stockpile locations. Please identify or confirm the areas available at Mammoth, Canyon, and Northeast Entrance for temporary stockpiling and segregation of salvaged topsoil/duff, satisfactory excavated material, rock, and other earthwork materials. If the designated areas are insufficient for the contemplated earthwork operations, please confirm whether additional temporary stockpile locations within previously disturbed areas may be proposed by the Contractor for Contracting Officer approval.	Allowable staging and stockpile areas are shown on Sheets C2.11, C2.12 and C2.13. Price the work with the assumption that no other areas will be offered within the park.
9/2/2026	14	3		Please identify whether NPS potable or non-potable water sources at Mammoth, Canyon, and Northeast Entrance will be available to the Contractor for dust control, moisture conditioning, compaction, and other construction operations. If available, please identify connection/fill locations, access restrictions, metering requirements, and applicable fees. If NPS water is not available, please confirm that the Contractor is responsible for independently sourcing and transporting all construction water.	NPS will make 10,000 gallons per day available to the Contractor for free at select hydrants in Mammoth and Canyon, for project use. Contractor must use a backflow preventer when taking water from the hydrants, and the park reserves the right to require Contractor-provided metering if it looks like the limit is being approached or exceeded. Water will not be made available at Northeast Entrance.

Date Answered	Question No.	Amendment No.	Detail (**)	Description (*)	Response
9/2/2026	15	3		The solicitation requires the Product Binder submitted with the proposal to include manufacturer, make/model, product information, and high-quality representations of finishes and colors for the identified product categories. The solicitation further indicates that the products identified in the Product Binder establish characteristics the Offeror commits to provide if awarded. The level of product-specific information requested appears similar to information typically developed and reviewed through the post-award product submittal process. Please clarify why this level of product submittal information is required from Offerors prior to contract award and whether NPS intends the Product Binder to function as a pre-award product submittal package. If the intent is instead to evaluate the proposed quality, performance, appearance, durability, and overall technical approach, please confirm whether Offerors may provide representative or basis-of-design products and finishes sufficient to demonstrate those attributes, with final manufacturer, make/model, finish/color selections, and complete product data submitted through the required post-award submittal process. If final product selections are required at proposal submission, please confirm that those selections are intended to constitute the Offeror's contractual product commitment upon award.	Binder is intended to communicate the proposed quality, performance, appearance and durability of the listed materials for evaluation purposes AND to establish a minimum level of quality. Item descriptions in the binder will be seen as contractually-binding quality baselines.
8/27/2026	16	2		Can key personnel be dual hatted?	Yes, only the SSHO and QC key personnel positions can serve in a dual hat capacity. As the work may involve concurrent construction activities, the contractor shall ensure that appropriate key personnel are on site at the various locations during the performance of the work. This may entail multiple individuals serving in these roles.
8/27/2026	17	2		The solicitation package indicates RV camp pricing shall these costs be included in cost proposal?	No, these costs are paid directly to the Park and are included in the solicitation for informational purposes only.
8/27/2026	18	3		Section L states pre-proposal questions shall be submitted a minimum of seven (7) days prior to the due date and time for proposals; however, the Pre-Proposal Conference presentation identifies September 3, 2026, at 2:00 p.m. MT as the deadline for questions. Please confirm the official deadline for submission of all pre-proposal questions.	All questions shall be received by September 3, 2026

Date Answered	Question No.	Amendment No.	Detail (**)	Description (*)	Response
8/27/2026	19	3		The Past Performance Questionnaire (PPQ) included as Attachment 6 appears to have been provided as a flattened/non-fillable form. Because offerors are required to forward the PPQ to client references for completion and submission to the Government, will the Government please provide an editable/fillable version of the PPQ to allow offerors and client references to complete the required fields and rating selections electronically?	Fillable form is attached.
9/2/2026	20	3	C2.11	Sheet C2.11 Shows the Laydown and Concrete Washout in the parking lot to the North (Rec Center). That area is currently asphalt. Can you confirm if it is intended that the area would be repaved following construction?	Contractor is responsible for removing all un-needed concrete material from the project site after completion of the work, at no additional cost to the Government. If this requires re-paving, the Contractor would be responsible for those costs.
9/2/2026	21	3	C2.11	Sheet C2.11 indicates that the existing 8" sanitary be grouted entirely but it is a little unclear the full length. Can you confirm the length and also confirm if full removal of that section would also be acceptable?	Pipe is approximately 300 feet in length. Contractor may choose to remove of all or some of this pipe and dispose of it off-site, at no additional cost to the Government. All portions of the pipe that remains must be grouted.
9/2/2026	22	3	19-24	Can you provide cut and fill data for each site or sheets 19-24	An estimate of cut-and-fill quantities for each of the locations has been attached to this solicitation amendment. This information is unverified by the Government and is being provided as a courtesy to the offerors, if they choose to use it. The Government is not responsible for the accuracy of this information. Use at your own risk.
9/2/2026	23	3		Will the Contractor be responsible for coordinating with RV campers at the Canyon site that will have to be moved to allow installation of the new water and sewer mains shown on Sheet C5.04?	If the Contractor chooses to take advantage of the RV sites made available at 01 11 00, Paragraph 1.6.G, they will be assigned the RV sites that will be impacted by construction. If not, the contractor chooses not to utilize the RVV sites, the NPS will be responsible for coordinating with the campers to make the area available for construction, based on schedule updates provided by the Contractor.
9/2/2026	24	3		Regarding finishings in the modular homes (ie. Fixtures etc.) does anything with the Buy America Act apply? We had heard rumors on past projects that this was something that was a priority so we just wanted to verify if that would be something to consider for the homes.	This solicitation includes 52.225-11 BUY AMERICAN – CONSTRUCTION MATERIALS UNDER TRADE AGREEMENTS (Nov 2023) and this clause must be adhered to in any subsequent contract or subcontract.
9/14/2026	25	4		Are there any other staging/lay down areas that may be available for use to stage the modular sections ahead of time that are relatively close to each of the construction sites that are not included in these documents? This may help with pricing; it would allow us to feed the crane more effectively while setting the homes with less down time.	The Government cannot commit to any additional staging or laydown areas at this time. Coordination during the Construction Phase between the NPS and Construction Contractor will be ongoing in efforts to facilitate safe and efficient placement of the modular housing units. Temporary road closures may be permitted, but the NPS cannot commit to any logistical measures at this time.

Date Answered	Question No.	Amendment No.	Detail (**)	Description (*)	Response
9/14/2026	26	4		Is it ok to trade all thrust block for mega lugs?	Yes - substitutions are subject to submittal requirements including review and approval/disapproval prior to implemetation and placement with related work. Substitutions which incur additional costs are the responsibility of the Construction Contractor.
9/14/2026	27	4		For utilities can either or any of these products be used: Muller, Kennedy, Mega Lug?	Components noted within the inquiry are subject to submittal review to ensure minimun technical performance requirements. Alternate materials/components/items may be submitted for consideration provided they meet the minimum technical requirements of the originally specificed materials/components. Proposed "Substitutions" are at the discretion of the Offeror and any associated additional costs associated with substitutions are the burden of the Offeror. Substitutions will be reviewed individually and evaluation for approval/rejection remains a requirement. Approval for use should not be presumed.The solicitation documents note a Mueller Super Centurion 250 hydrant type.
9/14/2026	28	4		Once we have gotten to good soil will native scarfing be ok for sub-base?	No
9/14/2026	29	4		Is 3" Select Road mix ok for fill and/or sub-base material?	Alternate materials/components/items may be submitted for consideration provided they meet the minimum technical requirements of the originally specificed materials/components. Proposed "Substitutions" are at the discretion of the Offeror and any associated additional costs associated with substitutions are the burden of the Offeror. Substitutions will be reviewed individually and evaluation for approval/rejection remains a requirement. Approval for use should not be presumed.
9/14/2026	30	4		Is P208 road mix ok for final base material?	Alternate materials/components/items may be submitted for consideration provided they meet the minimum technical requirements of the originally specificed materials/components. Proposed "Substitutions" are at the discretion of the Offeror and any associated additional costs associated with substitutions are the burden of the Offeror. Substitutions will be reviewed individually and evaluation for approval/rejection remains a requirement. Approval for use should not be presumed.
9/14/2026	31	4		There is detail for the curb on civil drawings, but curbing is not shown on any plans. Is the asphalt top of sidewalk ok and there is no curb?	Curb and Gutter callouts are shown on plans C3.03 behind the parking and on plans C3.04 & C3.05 behind the roadway. Asphalt top of sidewalk is shown and permitted behind the parking lots on Sheets C3.04 & C3.05

Date Answered	Question No.	Amendment No.	Detail (**)	Description (*)	Response
9/14/2026	32	4		Mammoth – Northwestern Energy design/release, transformer schedule, and grounding demarcation - Please confirm the current Northwestern Energy design/release status for the Mammoth electrical service shown on E1-E2, including the two pad-mounted transformers, anticipated equipment lead times, required Contractor site-readiness milestones, inspections, and planned energization sequence. Please also confirm whether Northwestern Energy or the Contractor is responsible for furnishing and installing grounding electrodes, grounding connectors, and bonding associated with the two transformer/power-vault locations.	Coordination with utilities will be required. See plan sheets and specifications for additional requirements and items to provide. Sheets with additional information include E1-E10 and Division 26 and others
9/14/2026	33	4		Mammoth – Secondary point of delivery, stub-up, and utility testing - Please confirm the exact Northwestern Energy point of delivery and responsibility for the four Mammoth secondary services, including who establishes/provides final service conduit stub-up geometry and the required timing relative to foundation completion and modular-unit setting. Please also confirm that Northwestern Energy performs testing and acceptance of utility owned primary and secondary conductors, transformers and associated utility equipment with the contractor responsible for contractor furnished site electrical work and overall startup coordination.	Coordination with utilities will be required. See plan sheets and specifications for additional requirements and items to provide. Sheets with additional information include E1-E10 and Division 26 and others
9/14/2026	34	4		Canyon-Transformer/LBC4 furnishing, release and lead times - Please confirm the serving-utility/NPS scope for the Canyon primary distribution system shown on E4-E6 specifically whether Northwestern Energy furnishes and installs all six pad mounted transformers and both 1PH LBC4 utility junction enclosures. Please identify required cfontractor release dates and site readiness milestones, current anticipated lead times, paid/vault interface requirements, and the planned inspection and energization sequence. This issue remains open in our current utility scope reconciliation.	Coordination with utilities will be required. See plan sheets and specifications for additional requirements and items to provide. Sheets with additional information include E1-E10 and Division 26 and others
9/14/2026	35	4		Canyon-Transformer/LBC4 grounding and utility testing. Please confirm whether Northwestern Energy or the Contractor furnishes and installs ground electrodes, grounding conductors, and bonding at each Canyon transformer/power vault location and the two LBC4 utility junction enclosures. Please confirm that Northwestern Energy performs testing and aceptance of utility owned primary and secondary conductors, transformers, LBC4 equipment and other utility owned equipment with the contractor responsible for contractor furnished site electrical work and startup coordination.	Coordination with utilities will be required. See plan sheets and specifications for additional requirements and items to provide. Sheets with additional information include E1-E10 and Division 26 and others

Date Answered	Question No.	Amendment No.	Detail (**)	Description (*)	Response
9/14/2026	36	4		Canyon-Secondary Service point of delivery/stub up - Please confirm the exact Northwestern Energy point of delivery and responsibility for the ten Canyon secondary services, including who establishes/provides final service conduit stub up geometry at each residence and the required timing relative to foundation completion and modular unit setting.	Coordination with utilities will be required. See plan sheets and specifications for additional requirements and items to provide. Sheets with additional information include E1-E10 and Division 26 and others
9/14/2026	37	4		Northeast Entrance - Flathead primary equipment/vault scope demarcation - Please confirm the complete Flathead Electric/Contractor scope for the Northeast Entrance primary system shown on E3, including who furnishes and installs the new pad mounted transformer, new three-phase primary valut/pad mount transformer lid, primary pulling vault, primary condut and conductors, and rigid steel sweep/riser at the existing utility pole/transformer vault interface.	Coordination with utilities will be required. See plan sheets and specifications for additional requirements and items to provide. Sheets with additional information include E1-E10 and Division 26 and others
9/14/2026	38	4		Northeast Entrance - Flathead connection charges, design status and lead times - because the contractor is responsible for Northeast Entrance temporary and permanent Flathead Electric connection charges, please provide any current Flathead Electric service application, utility design, budget/estimate, authorization, or other connection charge information available for this project. Please also confirm expected utility design/release timing, transformer/equipment lead times, site readiness milestones and energization sequence.	Coordination with utilities will be required. See plan sheets and specifications for additional requirements and items to provide. Sheets with additional information include E1-E10 and Division 26 and others
9/14/2026	39	4		Northeast Entrance - Flathead grounding and utility testing demarcation - Please confirm whether Flathead Electric or the Contractor furnishes and installs grounding electrodes, ground conductors, and bonding at the new primary vault/pad mounted transformer location, primary pulling vault and existing utility transformer vault/pole interface. Please also confirm which primary and secondary conductors, transformer/vault equipment, and utility interfaces are tested and accepted by Flathead Electric versus the Contracting, includidng responsibility for final energization and documentation required for NPS acceptance.	Coordination with utilities will be required. See plan sheets and specifications for additional requirements and items to provide. Sheets with additional information include E1-E10 and Division 26 and others
9/14/2026	40	4		Northeast Entrance - Secondary Service Point of Delivery/Stub Up - Please confirm the exact Flathead Electric point of delivery and responsibility for the two Northeast Entrance residence secondary services, including who furnishes/installs the service conduit and conductors, who established final service stup up geometry and the required timing relative to foundation completion and modular unit setting.	Coordination with utilities will be required. See plan sheets and specifications for additional requirements and items to provide. Sheets with additional information include E1-E10 and Division 26 and others

Date Answered	Question No.	Amendment No.	Detail (**)	Description (*)	Response
9/14/2026	41	4		All Sites - Permanent Telecom Provide Scope, Fees, and Demarcation - Please confirm the required permanent telecom service scope at Mammoth, Canyon and Northeast Entrance, including the serving provider at each site, required point of demarcation, whether provider-furnished cable/fiber/electronics are included by the provided and whether any permanent provider connection or service charges are Contractor costs. For Northeast Entrance, please also confirm whether a new communications vault/handhole is required in addition to the existing telecom pedestal shown on E3.	Coordination with utilities will be required. See plan sheets and specifications for additional requirements and items to provide. Sheets with additional information include E1-E10 and Division 26 and others
9/14/2026	42	4		All Sites - Environmental/Biological Surveys and Resource Delineations - Please confirm whether all required preconstruction environmental and biological surveys, protected species surveys, wetland delineations, and similar resource invetigations necessary to establish approved construction limits have been completed by NPS. If additional surveys, monitoring, delineation, or environmental consultant services are the Contractor's responsibility, please identify the required scope by site.	Investigations of the type listed, if any, are identified in the Contract Documents.
9/14/2026	43	4		Are you aware of any construction projects that will significantly delay traffic in 2027 or 2028?	Yes. With the exception of the Norris-to-Golden Gate project (see below), the following scheduled projects are not anticipated to delay traffic by more than 30 minutes: Mammoth to Gardiner Road, September 2027 to November 2031; Gardiner River High Bridge (just east of Mammoth, on the way to Tower Junction), ongoing through October 2027; Madison River Bridge tree clearing (between West Yellowstone and Madison Junction), Fall 2027. The Norris-to-Golden Gate project, scheduled for April 2027 through October 2029, will delay traffic between Norris and Mammoth for up to 20 minutes from July 5 to September 12 (2027-2029), for up to 30 minutes from September 13 to July 4 (same years), will have nighttime closures (8 PM to 7 AM) from June 23 to September 6, 2027), and will have a full closure from September 7 to October 31, 2027. Additionally, the park will perform unscheduled-for-now routine maintenance across the Yellowstone road system over the course of the Modular Housing project. This information is subject to change. The Government will not consider any delay claims based on this information, which is being provided as a best-available-information courtesy to offerors.

Date Answered	Question No.	Amendment No.	Detail (**)	Description (*)	Response
9/14/2026	44	4		It was said during the site walk-through that Contractors would be required to develop their own water system flow and pressure data. Is that now a requirement?	Following award of the Construction Contract, the GOVT/NPS will issue an RFP to support performance of fire flow/hydrant testing at all three project sites to ensure current flow rates (static/residual) are confirmed. Offers shall not include any presumed costs for such testing within proposals at this time.
9/14/2026	45	4		FAR 52.219-14(f) has two unchecked boxes. Which compliance period applies?	As this is an individual contract award (not an order under a Task Order Contract) - the following is applicable: "by the end of the base term of the contract and then by the end of each subsequent option period."
9/14/2026	46	4		SF 1442 Block 10(f) stated the requirement is unfunded with "high expectation" of funding. Confirm the funding outlook and whether the 90-day minimum acceptance period may be extended.	The 90-day acceptance period is sufficient.
9/14/2026	47	4		Confirm the bid guarantee is the $3,000,000 cap rather than 20% of the proposed price?	As per FAR 52.228-1 - Bid Guarantee - "The amount of the bid guarantee shall be 20 percent of the bid price or $3,000,000, whichever is less."
9/14/2026	48	4		Under FAR 52.225-11 is a complete modular unit evaluated as single pre-assembled construction material or component by component for domestic content? If component level - will NPS entertain pre-award determinations for appliances and heat pumps?	It is a component by component construction materials as is typical in the construction industry. No, NPS will not entertain the proposed scenario.
9/14/2026	49	4		Does FAR 52.222-5 extend David Bacon coverage to the modular manufacturing plant as a secondary site of the work?	No. These are considered manufacturing facilities and not subject to Davis Bacon requirements.
9/14/2026	50	4		Spec 01 27 -- states the six modular unit CLINs are measured and paid PER UNIT, Section B lists all nine CLINs as LS with totalprice only. Issue a corrected Section B and confirm whether the unit CLINs should carry quantities and unit prices	Pricing shall be submitted as shown on the bid schedule.
9/14/2026	51	4	Spec 01 27 00; Section B	Spec 01 27 00 orders CLINs 0004-0006 as Northeast Entrance and 0007-0009 as Mammoth, the reverse of Section B. Confirm the correct assignment by amendment.	Please refer to revised Bid Schedule attached to Amendment 4.

Date Answered	Question No.	Amendment No.	Detail (**)	Description (*)	Response
9/14/2026	52	4	Spec 01 27 00; Section B	Define the CLIN boundary between "Site Improvements" and the modular unit CLINs for: foundations, crawlspace, anchor rods, utility laterals from main to unit, site concrete (walks, stoops, pads), the four Mammoth garages, and the twelve 2BR decks. Section M warns on unbalanced pricing under FAR 15.404-1(g); offerors need this in writing before allocating.	Site Improvement CLIN items are defined in 01 27 00. Everything not listed in the site improvement CLIN description shall be attributed to a "building" CLIN.
9/14/2026	53	4	Section B; Section M(3)(c); Spec 01 27 00; Dwg S101/S201	Is a classified rock and trench rock unit price being added to Section B, or is 100% of rock risk carried in the lump sum? Spec 31 23 00 defines Rock and Trench Rock in full (D-8 with 50,000 lb breakout, CAT 320 with RR bucket, 6-inch over-excavation allowance, 35% volume reduction) but no rock pay item exists in Section B or 01 27 00. Note that the project's own erosion control detail concedes shallow bedrock: C7.01 detail 1 note 3 directs gravel bags over wattles where stakes cannot be used due to bedrock. If no pay item is added, the 31 23 00 measurement provisions serve no purpose and should be struck.	All of the CLINs related to this project shall be paid on a per unit or lump sum basis as defined in Section 01 27 00.
9/14/2026	54	4	Spec 31 23 00; Section B; Spec 01 27 00; Dwg C7.01 det 1 note 3	Every Canyon sanitary manhole is set at or below the depth at which the only Canyon boring hit auger refusal. Rim-to-invert: SSMH 1 9.82 ft, SSMH 2 9.44, SSMH 3 9.67, SSMH 4 9.41, SSMH 5 9.46, SSMH 6 9.48. Terracon boring B-05 encountered severely to completely weathered bedrock at 9.1 ft with auger refusal at 50 blows per inch. State the anticipated rock quantity for the Canyon utility trenches or add a unit price. The Amendment 3 Canyon Project Report adds no subsurface data. It states only that the sanitary lines will have depths of cover over 6 feet in all locations, and it does not address rock. This question is unchanged.	The B-05 boring was not located within the current Canyon Housing area. Contractor responsible for trenching to the depths as shown on the plans. See specifications, including section 31 23 00 for additional information
9/14/2026	55	4	Dwg C5.05 (29); C5.06 (30); Att. 1A App. D	Blasting is prohibited; only ripping, hydraulic hammer, or expansive grout with CO approval. Confirm expansive grout is pre-approved for trench rock and state the approval turnaround.	Expansive grout is not pre-approved. In scope work requiring alternate methodologies shall be proposed to the CO for consideration. This may include a project-specific/site-specific expansive grout plan for CO approval, and can expect Government response within two calendar weeks.
9/14/2026	56	4	Spec 31 23 00; Spec 01 11 00	Spec 31 23 00 excludes hardpan, loose rock, and boulders from classified rock, yet the NE Entrance boring logged large cobbles and boulders and the drawing legend maps boulders as an existing site feature. How is boulder and oversize removal compensated?	All of the CLINs related to this project shall be paid on a per unit or lump sum basis as defined in Section 01 27 00.
9/14/2026	57	4	Spec 31 23 00; Att. 1A App. D; Dwg C5.03; C1.03 legend	NE Entrance sanitary trenches run 10.87 to 11.10 ft deep (SSMH-D3 11.10, SSMH-D2 10.87) in alluvial sand and gravel with large cobbles and boulders above rhyolite bedrock at 14.1 ft. Confirm the anticipated excavation classification and shoring basis.	The Construction Contractor is responsible for development and implemtation of safe shoring plans/practices. See specifications, including sections 02 41 19 and 31 23 00 for additional information

Date Answered	Question No.	Amendment No.	Detail (**)	Description (*)	Response
9/14/2026	58	4	Dwg C5.03 (27); Att. 1A App. D	Mammoth sanitary trench depths sit at the measured groundwater table: SSMH 1 and SSMH 2 are each 8.67 ft rim to invert, and the 1989 Braun report recorded groundwater at 8.3 to 14.8 ft in three of four borings. S001 general note 14 states the contractor shall be solely responsible for any required dewatering of the site during construction, with no pay item and no reference to differing site conditions, and Spec 31 23 19 likewise carries no pay item. Confirm whether NPS considers groundwater above design invert a compensable differing site condition notwithstanding note 14, and identify where dewatering discharge is permitted in a hydrothermal area.	The report includes information located outside of the project area and is provided For Information Only (FIO). The Construction Contractor is responsible for development and implementation of groundwater management plans/practices. Speculation as to status of un-surveyed sub-grade site conditions are at the discrection of the Offeror.
9/14/2026	59	4	Dwg C5.02 (26); Dwg S001 note 14; Att. 1A App. E; Spec 31 23 19	Mammoth alluvium at 5-9 blows per foot will not support 2,500 psf without over-excavation and structural fill, and no over-excavation or subgrade improvement detail appears in the set. Is over-excavation anticipated and how is it paid?	The report includes information located outside of the project area and is provided For Information Only (FIO). See plans and specifications including structural sheets for project design
9/14/2026	60	4	Att. 1A App. E; Dwg S500/S501	Which report is the geotechnical basis of design? S001 cites a McGettigan Consulting report, project 15000701, available for review at the architect's office and included in none of the appendices. Will it be issued? Is the 1,500 psf allowable bearing on S001 deliberate conservatism or a carryover, given Terracon reports 2,500 psf continuous and 3,000 psf isolated?	The report includes information located outside of the project area and is provided For Information Only (FIO). See plans and specifications including structural sheets for project design
9/14/2026	61	4	Dwg S001; Att. 1A App. C, D, E	Both Terracon borings were drilled for a different project (YELL 309913 Predesign Services), one boring per site. The Mammoth report is dated 02/22/1989 for a proposed four-plex. Will NPS commission a current investigation, or grant reliance on these reports as the FAR 52.236-2 baseline, notwithstanding Spec 01 11 00 para 1.13 stating they are not Contract Documents?	The NPS currently has no plan to perform additional technical investigations at areas associated with this solicitation.
9/14/2026	62	4	Spec 01 11 00 para 1.13; FAR 52.236-2; Att. 1A App. C, D, E	Confirm the basis for hauling excess excavation and green waste offsite, and whether material may be balanced between sites. Amendment 3 Q&A 11 states the Government maintains salvage pits within 10 miles of Canyon and Mammoth but directs offerors not to rely on being able to dispose of any materials in them, and Q&A 12 states there is no Government-owned disposal area for slash, stumps, brush or green waste and that offerors are responsible for locating legal offsite disposal and the associated hauling and disposal costs. Against the Amendment 3 cut and fill estimate this is approximately 3,232 CY of net export from Mammoth and NE Entrance plus all cleared vegetation, hauled out of the park. Confirm: (a) whether NPS will identify any receiving location, even conditionally, so offerors price on a common basis; (b) whether Mammoth and NE Entrance export may be hauled to Canyon Village and used as the imported fill required there, which would substantially reduce total haul; and (c) whether the felled trees, including the 60 five-needle pine at Canyon, are NPS property to be retained or contractor waste to be disposed.	Excess materials and spoils shall be hauled outside of the park. However, should excess materials/spoils at one location associated with this solicitation be assessed as suitable for use at another location associated with this solicitation, a formal and technically based proposal for "re-use" may be provided to the CO for consideration - no presumption of accptance should be inferred.

Date Answered	Question No.	Amendment No.	Detail (**)	Description (*)	Response
9/14/2026	63	4	Amd 3 Q&A 11, 12, 22; Att. cut and fill estimate; Dwg C2.11-C2.13	Confirm the status of the Amendment 3 cut and fill estimate. The estimate provides Mammoth 1,717.41 CY cut / 422.63 CY fill / 1,294.79 CY net export; NE Entrance 2,293.67 CY cut / 356.95 CY fill / 1,936.71 CY net export; and Canyon 1,880.10 CY cut / 3,699.95 CY fill / 1,819.86 CY net import, expressly outside the building envelope, excluding foundation excavation, and excluding asphalt, concrete, base and subbase. The transmittal states the information is unverified, provided as a courtesy, and that the Government is not responsible for its accuracy. Confirm whether an offeror who prices on these quantities carries the variance, or whether a material difference between the estimate and the as-built quantity is a compensable change. Also confirm whether foundation excavation and the pavement section quantities are to be added to these figures or are already reflected in the site CLINs.	Information is unverified. The Government will not consider claims that reference this estimate. Offerors are wholly responsible for pricing the work based on information provided in the Construction Documents.
9/14/2026	64	4	Amd 3 Q&A 22; Att. estimated cut and fill quantities	Provide the measured static and residual pressure at NE Entrance. The Canyon Village and Mammoth Project Reports were received with Amendment 0003 and both report field hydrant testing with EPANET results: Canyon service nodes model 55.14 to 66.23 psi with 32.36 psi residual at 1,000 gpm, and Mammoth service nodes model 87.03 to 100.19 psi with 33.90 psi (M1) and 23.26 psi (M3) residual at 1,000 gpm. The NE Entrance Project Report gives demands only and reports no measured pressure, so NE Entrance service pressure, PRV count and meter loss remain unpriceable. Provide the NE Entrance hydrant test data and modeled service-node pressures.	see resonse to question 44.
9/14/2026	65	4	Amd 3 Canyon Project Report Sec 4.1-4.2, App. C; Amd 3 Mammoth Project Report Sec 4.1-4.2, App. C; Amd 3 NE Entrance Project Report; Amd 3 Q&A 8	Issue the current Park-inspected gravel pit list. The attached list is 2024-2025 with expirations near 10/1/25 and the nearest PASSED pits are in Livingston, MT. Confirm which pits will be valid in the 2027 and 2028 seasons and whether recertification of a closer pit is available and at whose cost. Note the imported aggregate demand is now quantified: 12 in Class A sub-base under all roadway and parking, 10 in crushed base under all pavement trench restoration, and non-frost-susceptible fill under the garage slabs per Q100.	The pits identified are those which are currently approved for use within the Park. This list is updated annually and as such, will be updated on its regular review schedule. If the contractor wishes to utilize a different pit than those identified, the contractor must submit the recertification request and all costs for such are borne by the contractor.
9/14/2026	66	4	Spec 01 71 13; pit list; Dwg C7.02 det 3; C7.07 det 4; S001 note 20	Is on-site concrete batching permitted at any of the three locations? If not, will NPS grant relief from the ASTM C94 90-minute discharge limit given haul times from Gardiner, Cody, and Cooke City?	No "at site" concrete batching is permitted - the Offer may submit a technical "satellite" batching plan to the CO for consideration - development and submittal of such a plan should not be presumed to confer acceptance. Concrete submittals will be reviewed on an individual basis for acceptance. Ongoing projects and construction contractors within Yellowstone may have concrete supply options/solutions suitable for consideration by offerors. Any such options are the responsibility of the Construction Contractor to administer.

Date Answered	Question No.	Amendment No.	Detail (**)	Description (*)	Response
9/14/2026	67	4	Spec 03 30 00	Can foundations be placed in fall 2026 or early season ahead of module delivery, or does the road-closure window force all work into a single season?	Discrete work task scheduleing is at the discretion of the Construction Contractor and are considered means/methods. The Construction Contractor must provide a complete project schedule as a DIV 01 submittal for GOVT/NPS review and approval. The Government makes no guarantees in relation to weather events which may preclude safe working conditions.
9/14/2026	68	4	Section F; Spec 01 11 00	The Mammoth MA 3356 connection invert conflicts between plan and profile. Plan callout: STA 23+83.51, INV 6025.22. Profile invert table: new 8" IN at 6021.86, a 3.36 ft discrepancy. The profile figure closes arithmetically (SSMH 2 OUT 6025.31 less 173 LF at 2.00%) but places the new main 2.91 ft below the existing 18" outlet invert of 6024.77. If the plan's 6025.22 is correct, the reach runs at approximately 0.05%. Provide the governing invert and a corrected profile. Answer together with Q26 and note the Q85 sequencing constraint.	NOTE : revision to sheet C5.02 issued - SSMH1 Out: 6035.79 SSMH2 IN: 6028.50 SSMH2 Out: 6028.40 SSMH3 In: 6024.87
9/14/2026	69	4	Dwg C5.02 (sheet 26)	Mammoth SSMH 2 shows INV 8" IN and INV 8" OUT both at 6025.31 - no drop across the structure. C7.05 detail 5 note 1 requires drop across invert to be greater than or equal to the slope of the adjacent sewer, and every Canyon manhole carries a 0.10 ft drop. Confirm intent or provide corrected inverts. Same reach as Q25.	NOTE : revision to sheet C5.02 issued - SSMH1 Out: 6035.79 SSMH2 IN: 6028.50 SSMH2 Out: 6028.40 SSMH3 In: 6024.87
9/14/2026	70	4	Dwg C5.02 (26); Dwg C7.05 det 5 note 1	Mammoth SSMH 1 requires a drop connection that is not detailed. The existing 8" VCP enters at INV 6035.89 and the outlet is 6032.59, a 3.30 ft drop inside the structure. C7.01 through C7.07 contain no drop-manhole detail; C7.05 detail 5 addresses drop across invert only. Provide an inside or outside drop detail.	NOTE : revision to sheet C5.02 issued - SSMH1 Out: 6035.79 SSMH2 IN: 6028.50 SSMH2 Out: 6028.40 SSMH3 In: 6024.87
9/14/2026	71	4	Dwg C5.02 (26); Dwg C7.05, C7.06	"12.25 degree bend" is called out twice, at STA 101+28.58 and 103+60.05. Standard AWWA C900 deflection fittings are 11.25 and 22.5 degrees. Confirm the correct fitting.	NOTE : revision to sheet C5.05 issued - 11.25 degree bend.
9/14/2026	72	4	Dwg C5.05 (sheet 29)	EX SSMH CA2078 (STA 100+64.53, OFF 40.57' L) and EX SSMH CA2205 (STA 100+31.06, OFF 95.28' R) are both shown at RIM 7946.90. Confirm the correct rim elevations. Separately, no work is called out at either structure - state whether the existing 6" VCP services tied to them are abandoned, reconnected, or left in service.	NOTE : revision to sheet C5.05 issued- CA2078 Rim revised to 7942.52. CA2205 Rim revised to 7947.14. Inverts are shown correctly. No work is proposed at either structure. Existing services shall be protected and left in service unless noted otherwise.

Date Answered	Question No.	Amendment No.	Detail (**)	Description (*)	Response
9/14/2026	73	4	Dwg C5.05 (29); C2.13 / sheet 11	Confirm the set as issued is the bid set and no revision is pending. The C5 sheets carry PE seals yet retain the preliminary stamp, issue dates within Rev 0 range from 06/18/2026 to 06/26/2026 with plot dates to 07/22/2026, several architectural sheets carry two dates (A005B, A101B, A200B, A610B show 05/28/25 alongside 06/12/2026; A901B shows 07/23/25), and A901C carries a duplicate sheet number (shown as both 76 and 77 of 94, with a stray "D") and lists "Designer" rather than an initial in the Designed field. Provide a corrected sheet index and confirm the total sheet count. The unit electrical sheets E101A, E101C and E101D are dated 06/12/2026 and E101B is dated 05/28/25 under PMIS 326141A/326104, and all four carry the PRELIMINARY NOT FOR CONSTRUCTION stamp, while site electrical sheets E6 through E10 carry live professional engineer seals - Wyoming on E6, E7, E9 and E10 and Montana on E8 - and carry no stamp.	The Construction Drawings dated August 18, 2026 issued and included with Amendment 2 are the 100% final construction documents to be utilized for construction purposes. The Construction Specifications dated August 2026 issued and included as part of Amendment 2 are the 100% final construction documents to be utilized for construction.
9/14/2026	74	4	Cover sheet; A901B (76); A901C; C5.01-C5.09 title blocks	The complete set is stamped "100% DRAFT CONSTRUCTION DOCUMENTS - NOT FOR CONSTRUCTION" on the cover sheet dated June 18, 2026, the Quality Design Certification block on the cover is entirely blank (no box checked, no Project Manager signature, no date), and every architectural sheet carries "PRELIMINARY - NOT FOR CONSTRUCTION. Not for permits, pricing or other official purposes." A firm fixed price is nonetheless required. Amendment 3 Q&A 7 further confirms that electronic CAD files will be provided only after contract award, so no quantity in this set can be verified against the design model before the price is committed. Either issue a certified, signed and sealed CD set by amendment, or confirm the offeror is entitled to equitable adjustment for changes between this set and the eventual construction set. Note also that S001 note 7 places site positioning and project datum on the architectural drawings, which are reference-only under Spec 13 34 26, and A000 states the set is a conformance set illustrating design intent only. The Amendment 3 Project Reports show the same pattern. The Mammoth Project Report is dated July 21, 2026 on its cover but carries a sign-off block dated 6/18/2026 identical to the Canyon report's, and the Canyon report Sec 5.1 states the project includes no additional storage capacity for the Town of Mammoth, which is text carried over from the Mammoth report.	Refer to question 73 response. Amendment 2 included Construction Documents (Technical Drawings and Specification) dated August 18, 2026 - said documents are the 100% final construction documents to be utilized "for construction".

Date Answered	Question No.	Amendment No.	Detail (**)	Description (*)	Response
9/14/2026	75	4	Cover sheet (sheet 1); A000 (51); all A/P/E unit sheets; S001 note 7	Confirm how quantity variance is treated where the drawings cannot be verified before award. Amendment 3 Q&A 7 states that electronic CAD files, existing topographic survey and proposed grading surfaces will be provided only after contract award. Q&A 10 directs offerors to consider the Construction Drawings accurate as drawn and price accordingly. Several quantities material to this scope are stated only as areas, are given without lengths, or must be scaled or interpolated - including the C5.04 water main with no length or profile, roughly fifteen services without lengths, demolition given in area with no depth, the Canyon earthen ditch with no cross section, and the culvert cover at SD Line J. Confirm that a variance between the drawings as priced and the design model furnished after award is a compensable change, or issue the CAD files to all offerors before the proposal date.	The CLINs are being bid as lump sump therefore, no modifications will be made after award for any variances in quantities.
9/14/2026	76	4	Amd 3 Q&A 7, 10; Dwg S001 note 6	No profile and no length are provided for the Canyon 8" water main on C5.04. Note 1 states no survey was completed outside the shown contours, utilities are to be field fit, and no design profile will be provided, while note 3 still requires 6 ft minimum cover. The C4 grading series begins at Badger Rd 100+00 and does not cover this run. S001 note 6 directs that scaled dimensions not be used and only written dimensions be relied on, and none are given. Provide a design profile and length, or confirm in writing that depth and quantity variance from field-fit staking is a compensable change. The Amendment 3 Canyon Project Report Sec 1.0 and Sec 5.0 now state approximately 1,460 LF of 8-inch AWWA C900 DR18 main, a single air release valve at the high point, gate valve spacing no greater than 500 ft, a terminal fire hydrant, and a connection point adjacent to the existing maintenance facilities approximately 650 feet south of the proposed units. Confirm the 1,460 LF governs, that the 650-foot lead-in is included within it, and provide the profile, which the report does not contain.	The depth and quantity variance from field fit staking is a compensable change. The total expected length of 8" water on Sheets C504-C5.06 may be scaled based on the plans. Note 1 on S001 applies ONLY to the sheet(s) it is included on - specifically structural sheets.
9/14/2026	77	4	Dwg C5.04 (28) note 1; Dwg S001 note 6	Provide the sanitary profile for the 312 LF reach from CA2092 to STA 100+00. The reach is dimensioned by length and slope but roughly 180 LF falls outside the C5.05 profile grid, on the sheet that disclaims profiles.	No profile or survey data exists for this area.
9/14/2026	78	4	Dwg C5.04 / C5.05 (28-29)	State the size, material, and pressure class of the existing water main at the C5.04 tie-in, labeled only "EX WATER," and confirm whether a live tap is required or a shutdown is permitted within the 12-hour May-September cap.	Size, material, and pressure class of existing water main is unknown. Technical approach to performance of work is at the discretion of the Construction Contractor. NPS will consider requests for a temporary shutdown to facilitate work if required - formal requests shall be provided to the CO to allow for necessary coordination, review, and approval/rejection.

Date Answered	Question No.	Amendment No.	Detail (**)	Description (*)	Response
9/14/2026	79	4	Dwg C5.04 (28); Spec 01 11 00	Provide the stations at each site where cover over water services and force mains falls below 5.5 ft, so insulation board can be quantified. C7.06 detail 3 now gives the geometry - high-density XPS per ASTM C578 Type IV, 4 in minimum composite thickness, extending 4 ft either side of pipe centerline where cover is under 3.5 ft and 3 ft either side where cover is 3.5 to 5.5 ft, no rock over 3 in within 6 in of board - so the item is priceable per linear foot once the footage is known. Note the detail's 5.5 ft trigger against plan notes requiring 6 ft of cover: the details concede the design does not achieve cover somewhere.	NOTE : update to sheet C7.06 - Insulation is required when depth of cover falls below 6-ft.
9/14/2026	80	4	Dwg C7.06 det 3; C5.01 (25); C5.02 (26); C5.03 (27)	Manhole diameter is unspecified for eight of eleven structures - only Mammoth SSMH 1/2 and Canyon CA2092 are called out as 48 in. Provide diameter for Canyon SSMH 1-6 (9.4 to 9.8 ft deep) and NE SSMH-D2/D3 (10.9 to 11.1 ft). Separately, C7.05 detail 5 is the only manhole detail in the set and it is a FLATTOP with depth shown as varies; there is no cone or eccentric-top detail. Confirm flattop construction is intended at these depths. The Amendment 3 Canyon Project Report Sec 7.1 and 7.3 confirm all six Canyon manholes are 48-inch (4-foot) precast reinforced concrete with monolithic base, and the Mammoth Project Report Sec 7.1 and 7.3 confirm two 48-inch precast flattop manholes. This question is reduced to NE Entrance SSMH-D2 and SSMH-D3 (10.9 to 11.1 ft deep).	All manholes are 48-inches in diameter with flat-tops
9/14/2026	81	4	Dwg C5.03 (27); C5.05 (29); C5.06 (30); C7.05 det 5	Approximately fifteen water and sanitary services carry station ties but no lengths. Only Mammoth Building 1 is dimensioned (167 LF 2" HDPE, 82 LF 2" PVC force main, 13 LF 4" gravity). The Amendment 3 NE Entrance Project Report states that each unit requires approximately 150 LF of service line from the main, which supplies the NE Entrance figure. Provide the equivalent length per unit for Mammoth and Canyon, noting that S001 note 6 directs that scaled dimensions not be used. The Amendment 3 Project Reports now supply several of these: Canyon water services approximately 50 to 80 LF each (10 ea), Canyon sanitary services approximately 35 LF each (10 ea), Mammoth water services approximately 35 LF each (4 ea), Mammoth sanitary services approximately 35 LF (3 ea gravity), and the Mammoth Building 1 force service at 82 LF of 2-inch plus 13 LF of 4-inch gravity. Confirm these report lengths govern over the undimensioned station ties on the C5 sheets, and provide the remaining NE Entrance service lengths.	Services must meet setbacks as shown in the details. Lengths may vary and may be scaled based on plan layout. Note 1 on S001 applies ONLY to the sheet(s) it is included on - specifically structural sheets.
9/14/2026	82	4	Dwg C5.01-C5.03, C5.05, C5.06; Dwg S001 note 6	Potholing is mandated on every plan and profile sheet with no quantity, and civil note 23 bars trenching until utility locations are confirmed by the owning utilities. Provide an anticipated pothole count per site.	Construction Contractor is responsible for determining adequate number of potholes for construction.

Date Answered	Question No.	Amendment No.	Detail (**)	Description (*)	Response
9/14/2026	83	4	Dwg C5.02-C5.06, C5.09; C1.03 note 23	Mammoth Building 1 grinder pump: confirm scope, CLIN, and interface. C7.06 detail 4 fully specifies the equipment as contractor-furnished (Zoeller simplex 48 in by 120 in grinder package with M803 or approved equal, 3/4 HP, fiberglass wet well basin, guide rails and base elbow rail system, check and shut-off valves, quick disconnects, 302 stainless fasteners, bolted fiberglass cover, float tree, control panel with HOA switch, elapsed time meter and cycle counter), and it appears on the civil details rather than in the delegated package. Confirm which CLIN carries it; note 2 sends wet well location to the architectural and structural plans, which are reference-only; and Division 26 covers only Site Electrical, leaving the power feed to the control panel unassigned.	Grinder pump shall be included in utilities within Site Development CLIN
9/14/2026	84	4	Dwg C7.06 det 4; C5.01 (25) note 3; Dwg S501 det 14; Spec 13 34 26; Div 22, 26	Coring into MA 3356 and SSMH-D1 subjects both existing structures to the same leak testing and acceptance requirements as new manholes. If an existing structure fails, is rehabilitation or replacement a contract change?	Leak testing is not required at manholes not provided by or rehabilitated by contractor." However, Offers are advised : Per FAR 52.236-9- Protection of Existing Vegetation, Structures, Equipment, Utilities and Improvements(b) "The Contractor shall protect from damage all existing improvements and utilities (1)at or near the work site, and (2)on adjacent property of a third party, the locations of which are made known to or should be known by the Contractor. The Contractor shall repair any damage to those facilities, including those that are the property of a third party, resulting from failure to comply with the requirements of this contract or failure to exercise reasonable care in performing the work. If the Contractor fails or refuses to repair the damage promptly, the Contracting Officer may have the necessary work performed and charge the cost to the Contractor."
9/14/2026	85	4	Dwg C5.02 note 7; C5.03 note 4	NE Entrance manholes cannot be ordered until post-award verification of existing inverts in SSMH-D1, yet the 188 LF profile is already pinned to INV 7389.30. Confirm the schedule assumption and that a differing invert carries time and cost relief.	The Construction Contractor is responsible for construction scheduling and verification prior to installation

Date Answered	Question No.	Amendment No.	Detail (**)	Description (*)	Response
9/14/2026	86	4	Dwg C5.03 (27) note 2	All three culverts fail the minimum cover requirement in the project's own culvert detail when the specified pavement section is applied. C7.07 detail 1 note 2 requires 12 in cover to the bottom of the pavement structural section; C7.02 detail 3 makes that section 19 in (3" HMA + 4" Class E + 12" Class A), so 31 in to finished grade is required. SD LINE J: C4.04 gives ends at STA 101+86.34/OFF 17.977/INV 7938.06 and STA 102+05.78/OFF -22.607/INV 7938.45 (geometry yields 45.0 LF, matching C5.09); centerline invert interpolates to 7938.23, top of pipe approx 7940.15 against centerline low point 7940.95 - about 0.80 ft, roughly 9.6 in. The pipe occupies the sub-base. SD LINE K: centerline invert 7950.45, top of pipe approx 7952.37 against BVC 7954.63 - about 27.1 in, roughly 4 in short. SD LINE R at NE Entrance also appears short. Confirm whether the road profile is raised, the culverts lowered, or a reduced pavement section is permitted at the crossings.	Install within a reduced section profile is permissible. Proposals during construction to revise this or any profile will require Construction Contractor submittal for review and approval to the NPS. No profile will be accepted that reduces overall thickness or profile of pavement .
9/14/2026	87	4	Dwg C4.04 (22); C4.06 (24); C5.08 (32); C5.09 (33); C7.07 det 1; C7.02 det 3	The unit schedule is now fully defined by the C3 sheets and does not match the Categorical Exclusion. Mammoth: Buildings 1-4, all 3 bedroom, each with a garage, Building 3 ABAAS. Canyon: Buildings 1-10, 2 bedroom, Building 2 ABAAS. NE Entrance: Buildings 1-2, 2 bedroom, Building 1 ABAAS. Sixteen units, three ABAAS, reconciling to Section C and the nine-CLIN structure. Appendix A describes only two 2-bedroom units at Mammoth with no garages. Confirm NEPA coverage extends to four 3-bedroom units with attached garages at Mammoth, and identify the covering decision document if it is not Appendix A.	NEPA coverage extends to four three-bedroom units with attached garages at Mammoth. The Categorical Exclusion included in Appendix A is the covering decision document.
9/14/2026	88	4	Dwg C3.01 (13); C3.02 (14); C3.03 (15); C3.04-C3.06 (16-18); Att. 1A App. A; Section C	Confirm the USACE Nationwide Permit covers the SD Line J outfall and its 402 SF Class 1 riprap apron adjacent to mapped wetlands, identify who holds the permit, and state whether any in-water work window applies. C2.13 directs protecting existing wetlands "outside of improvement areas" twice, which concedes impact to wetlands inside the improvement areas.	A copy of the USACE Nationwide Permit will be provided upon award of contract. Limits of disturbance are as denoted within the Construction Documents (Drawings).
9/14/2026	89	4	Dwg C5.09 (33); C2.13 (11); C3.04 (16); Spec 01 11 00	Are as-builts available for existing utilities at all three government areas, what is their stated accuracy, and will NPS accept responsibility for undisclosed or mislocated lines beyond the "truly unknown utility" provision?	There is no as built information for these areas. The NPS will not accept responsibility for undisclosed and/or mislocated lines beyond the "truly unknown utility" provision. It is the contractor's responsibility to utilize 811 for all utility locates.
9/14/2026	90	4	Dwg C1.03 note 23; C2.11-C2.13 note 2; Spec 01 11 00	Is there any known contamination, asbestos-cement pipe, or lead in existing utilities to be removed?	Unknown

Date Answered	Question No.	Amendment No.	Detail (**)	Description (*)	Response
9/14/2026	91	4	Dwg C2.11-C2.13	Confirm the fire suppression water supply basis. All 16 units receive NFPA 13D interior sprinklers per A001 notes F1-F8 and the red note on A101A, A101B, A102C and A102D, yet Canyon shows a single fire hydrant on a dead-end 8 in main terminating at a cap at STA 108+28.90 serving ten sprinklered buildings, and neither Mammoth nor NE Entrance shows a new hydrant. The Amendment 3 NE Entrance Project Report establishes a 1,000 gpm one-hour site fire flow and a 150 gpm automatic suppression demand, and states that the 2 in HDPE service is a combined domestic and fire suppression connection with no additional hydrants at that site. Provide the equivalent basis for Canyon and Mammoth, the hydrant count, and confirm the existing mains can support both domestic and sprinkler demand.	Fire system to be installed as identified
9/14/2026	92	4	Dwg C5.06 (30); C7.05 det 4; A001 notes F1-F8; A101A (61); A102C (65)	Define the boundary between utility-provided and contractor-provided electrical and telecom work, and who pays. The site electrical key notes assign the pad mount lid and transformer, and separately "conduit and conductors," to Northwestern Energy at Mammoth and Canyon and to Flathead Electric at NE Entrance, without identifying which runs on the plans are utility scope. Appendix G is a blank Northwestern Energy authorization form with connection charges unfilled and there is no equivalent instrument for Flathead Electric. NE Entrance additionally requires intercepting an existing pad mounted transformer vault with a rigid steel sweep and riser 10 ft up the pole, and providing a three phase primary vault with pad mount transformer lid per utility requirements. Canyon also includes removal and disposal of approximately 170 LF of overhead electric line - confirm who de-energizes and who performs the removal. E6 key note 3 assigns utility provided conduit and conductors and on that sheet appears to apply to the 2/0 triplex secondary runs as well as the 1PH primary. Confirm specifically whether the secondary conductor and its conduit - 2/0 triplex with 1 #6 ground in 2 in conduit at Mammoth and Canyon, and 3 in conduit with 3 #3/0 and 1 #6 at NE Entrance - are utility furnished or Contractor furnished at each site, and identify which party excavates, beds, backfills and compacts the trench where the cable is utility furnished.	Coordination with utilities will be required. See plan sheets and specifications for additional requirements and items to provide. Sheets with additional information include E1-E10 and Division 26 and others
9/14/2026	93	4	Dwg E1-E6 (41-46) key notes; E3 (43); Att. 1A App. G; C2.13 (11)	NTP is assumed 11/01/2026, when interior park roads are closing. How does NPS reconcile a 730-day clock starting in a closed season? Will closures and spring plow dates be treated as excusable delay or contractor risk under FAR 52.236-3?	Mammoth area is not subject to park adminstrative road closures and work may proceed at any time at the Mammoth location as weather permits. NE Entrance location is not subject to park adminstrative road closures and work may proceed at any time at the NE location as weather permits.

Date Answered	Question No.	Amendment No.	Detail (**)	Description (*)	Response
9/14/2026	94	4	Section F; FAR 52.236-3	Work hours of 8am-5pm Monday-Friday with no night or holiday work directly conflict with FAR 52.236-15(c), which requires the contractor to recover schedule by increasing shifts, overtime, and added days at no cost to the Government. Confirm how an offeror is to comply with the recovery remedy the clause demands.	The period of performance includes the calculation wherein no holiday, or weekend work is allowed and is inclusive of weather shutdown periods. The contractor needs to complete the work in order to allow for the seasonal nature of the work associated with seasonal winter weather shutdowns in their schedule.
9/14/2026	95	4	Spec 01 11 00; FAR 52.236-15(c)	Do the $1,796 per day liquidated damages attach only to 730-day final completion, or do the 2027 Mammoth/Canyon and 2028 NE Entrance seasons carry interim milestone LDs?	LD's apply to the 730 day final completion and is inclusive of work all three locations.
9/14/2026	96	4	Section F; Section E	Confirm whether the 2027 construction season sequencing is concurrent or sequential. Section M Factor 3 lists Construction Season 2027 as 'a. Mammoth b. Canyon' and Construction Season 2028 as 'c. Northeast'. Confirm that Mammoth and Canyon may be constructed concurrently within the 2027 season, or state whether the lettering requires Mammoth to be substantially complete before Canyon begins.	Project Scheduling and Sequencing is at the discretion of the Construction Contractor. A full project schedule shall be submitted for NPS review and acceptance/rejection as a DIV 01 item prior to notice to proceed.
9/14/2026	97	4	Section M Factor 3	Is a hydrothermal encounter under civil note 21 a differing site condition under FAR 52.236-2, an excusable delay, or neither? The stop-work trigger (a basketball-sized or larger hole, standing or flowing water hot or cold other than stormwater, or a rotten-egg smell) carries no time limit, no compensation language, and no relief from liquidated damages. Both Mammoth and Canyon Village are identified as hydrothermal, and the Mammoth boring logs travertine.	This is a known condition and the Construction Contractor shall plan and prepare for work in areas with these known conditions.
9/14/2026	98	4	Dwg C1.03 note 21; FAR 52.236-2; Att. 1A App. E	Confirm the usable clearing window per site given the March 1 - August 15 raptor and May 1 - August 15 songbird restrictions plus road closures, and state whether nest-survey-and-clear is permitted inside the window.	The NPS shall coordinate and perform bird/nest survey during the time frames noted to determine if any active nests are within the project site work limits - if no active nesting is discovered, work may continue uninterrupted. If active nesting is observed and confirmed, adjacent work may continue at the discretion and direction of the NPS.
9/14/2026	99	4	Spec 01 11 00; Att. 1A App. B	State the maximum allowable module dimensions for transport on park roads (width, height, length, axle weight). Module footprints are now fixed: 2BR 40 ft by 28 ft plus an 8 ft deck; 3BR 56 ft by 28 ft plus a 20 ft garage bay. Are there bridge or hairpin restrictions on Grand Loop Road or Norris Canyon Road? Will NPS provide escorts or closures, and at whose cost?	NPS will not provide for escorts or closures - logistics and planning are the responsibility of the Construction Contractor. Transport plans for mudular units to the final placement locations are the responsibility of the Construction Contractor. Verification of road widths and capacities, etc. are the responsibility fo the Construction Contractor based on anticipated load sizes and anticipated transport methods. Refer to Construction Specification 01 11 00 - Summary of Work-Section 1.6(H).

Date Answered	Question No.	Amendment No.	Detail (**)	Description (*)	Response
9/14/2026	100	4	Dwg S101 (89); S201 (91); Spec 13 34 26; Section C	Can equipment, materials, and temporary facilities be stored on site over winter? All excavation must be backfilled before winter shutdown.	Please refer to Construction Specification 01 11 00 - Summary of Work, Section 1.6(B). Project Site security and maintenance of project site perimeter controls are the responsibility of the Construction Contractor. Should the Construction Contractor elect to store equipment, materials, temporary facilities, or other items within designed LOD's, any and all liability for damage and/or loss of same lies solely with the Construction Contractor.
9/14/2026	101	4	Spec 01 11 00	Can equipment inspections be batched, and is re-inspection required each time a machine leaves and returns? Every off-road machine requires power-washing and in-person inspection with 24-hour notice, inspectors available Monday-Thursday 7am-5pm only.	Equipment re-inspections must be completed each time a machine leaves and returns the park and at each individual site in order to prohibit the spread of invasive species. Equipment inspections can be batched.
9/14/2026	102	4	Spec 01 11 00	Both attached wage determinations are Wyoming (WY20260041 Building, WY20260044 Civil) but NE Entrance is confirmed in Park County, Montana on the cover sheet, which lists the project state as MT/WY. Amendment 3 Q&A 1 confirms there is no federal licensing requirement and that state and local trade licensing applies, but does not identify the governing wage determination. Confirm the applicable wage determination, the applicable standard specification (Appendix F is the Wyoming Public Works Standard Specifications 2023), and the permitting agency for the Montana site. Note C7.04 detail 6 note 7 additionally cites Wyoming DEQ Chapter 12 as governing cement-treated fill at all three sites, and civil note 1 requires both Wyoming and Montana contractor licenses.	WY 20260041 and WY20260044 cover Park County as denoted in the "Counties" section of the determination. WY20260041 - applies to the work associated with the buildings while WY20260044 applies to the work related to the civil components. For additional questions relative to the wage determinations, contact the U.S. Department of Labor as they are the governing entity for setting the Construction Wage Rates. The response to Question 1 does not change and the governing regulatory agencies for permitting compliance is both WY DEQ and Montana DEQ.
9/14/2026	103	4	Cover sheet (1); Attachments 3 and 5; Att. 1A App. A and F; Dwg C1.03 note 1; C7.04 det 6 note 7	Camps are prohibited at Mammoth and NE Entrance, only 15 trailer sites are available near Canyon Village at $485.74/month plus electricity, and campgrounds and in-park commercial lodging are prohibited. Amendment 3 Q&A 23 states that a contractor electing to use the Canyon RV sites will be assigned the sites impacted by construction, which are those within the C5.04 water and sewer alignment. Confirm whether sites outside the construction footprint can be assigned instead, since the alternative is relocating contractor accommodation mid-season. Q&A 17 also confirms RV camp costs are paid directly to the Park and are informational only rather than a proposal line item. Note that Section M Factor 2 separately requires the offeror to describe its management approach to worker housing, daily transportation, and maintaining crew production rates despite long commutes - so this is an evaluated technical item as well as a cost item. Will NPS make NPS-owned housing or additional sites available at Mammoth or NE Entrance, and does lodging in Gardiner or Cooke City fall within the prohibition on in-park commercial lodging? Separately, state the maximum permitted occupancy per assigned trailer site and confirm whether multi-occupancy	No - the park will not make NPS owned housing or additional sites available. Housing that the Construction Contractor obtains outside of park boundaries (i.e. within Gardiner MT or Cooke City MT for example) do not fall within the prohibition relative to in-park commercial housing as they lie outside of the Park boundaries. The size of RV units is not dictated by the agency; however, units shall not exceed the space being provided nor can more than one camper be placed in said trailer site (i.e., 1 RV/trailer per 1 site). The rate is adjusted annually - the stated rate of $485.74 is provided for information only. The rate does not change based on the number of occupants within the trailer unit. Any agreement to use RV sites exists directly between the Construction Contractor and Yellowstone National Park and is not the perview of the Construction Contract.

Date Answered	Question No.	Amendment No.	Detail (**)	Description (*)	Response
9/14/2026	104	4	Spec 01 11 00; Section L Factor 2	Are there daily gate procedures, park entry fees, vehicle permits, or escort requirements for the workforce?	Following construction contract award, gate passes are available to any prime and subcontractor conducting work associated with the project - said gate passes facilitate no-fee entry into the park. The Construction Contractor must make requests for gate passes in writing to the CO.
9/14/2026	105	4	Spec 01 11 00	Confirm UTVs are permitted where ATVs are not, and identify any further restrictions on equipment type or operating hours.	Per SPECIAL REQUIREMENT 4: Prohibition of All Terrain Vehicles (ATV's) - Intermountain Region - ATV's are not permitted; however, UTV's are permitted.
9/14/2026	106	4	Spec 01 11 00	Confirm the basis for construction water at NE Entrance. Amendment 3 Q&A 14 makes 10,000 gallons per day available free at select hydrants at Mammoth and Canyon, with a backflow preventer required and the Park reserving the right to require contractor-provided metering, but states that water will not be made available at Northeast Entrance. Confirm the nearest permitted source from which construction water may be drawn and hauled for dust control, moisture conditioning and compaction at NE Entrance, and whether any NPS source may be used under a separate arrangement.	Contractor is responsible for identifying an off-site water source or hauling construction water from the Mammoth or Canyon. Water may be available from a hydrant at Tower Junction, but that water treatment and storage capacity is limited, and NPS cannot commit to providing water from that location.
9/14/2026	107	4	Amd 3 Q&A 14; Spec 01 50 00	Identify the NPS-administered project management and communication software required by Spec 01 31 00, its license cost, and who pays.	The project management software is Government provided and there is not cost to the Contractor for its use during construction.
9/14/2026	108	4	Spec 01 31 00	What is the nearest permitted asphalt plant NPS will accept, and will NPS relieve mix-temperature-at-delivery requirements given haul distance to sites at 7,000-8,000 ft?	Offerors are responsible for identifying locations of asphalt plants. There may exist in park facilities associated with other ongoing projects which may present options for Offeror consideration - any coordination and agreements with facilities related to other projects is the responsbility of the Construction Contractor.
9/14/2026	109	4	Spec 32 12 00; WYDOT binder list	State the allowable paving season at each elevation - earliest and latest dates and minimum ambient and base temperatures.	Refer to requirements noted within the Construction Documents.
9/14/2026	110	4	Spec 32 12 00	Mammoth is within a National Historic Landmark District and NE Entrance is adjacent to the Northeast Entrance Road Historic District (48YE821). Do Section 106 or SHPO conditions restrict pavement color, aggregate, surface treatment, curb type, or site lighting?	Work shall be performed as directed within the Construction Documents.
9/14/2026	111	4	Att. 1A App. A; Spec 01 11 00	Confirm pavement markings, signage, guardrail, and bollards in scope and the governing CLIN. The C3 sheets now show stop signs (install and relocate), stop roadway markings, accessible parking signs and symbols, wheel stops, and approximately 580 SF of striping at NE Entrance.	Site Development

Date Answered	Question No.	Amendment No.	Detail (**)	Description (*)	Response
9/14/2026	112	4	Section B; Dwg C3.03-C3.06; C7.03	Only Mammoth has a traffic control plan (C2.21), and its note 1 states the traffic control shown is for reference only with a contractor-prepared plan approved by the Contracting Officer required prior to work. Canyon reconstructs Badger Road to a sawcut tie-in at Grand Loop Road (STA 112+54.41) and NE Entrance ties to Meridian Road, with no traffic control sheet for either. Confirm whether contractor-prepared traffic control plans are required at Canyon and NE Entrance, whether any work falls within the Grand Loop Road, Norris Canyon Road or US 212 right-of-way triggering WYDOT or MDT permits, and note that C2.21 note 19 makes any addition or modification to traffic control subsidiary to the bid item with no separate payment.	The contractor is required to provide interim/instance specific Traffic Control Plans for all locations as equipment, materials and supplies will be transported to and from each site throughout the construction season through various portions of the Park. The Mammoth project site requires full time traffic controls for the duration of work activity at that location. The Park remains open to the public and as such the Contractor must address impacts to visitor safety as well as visitor and park traffic.
9/14/2026	113	4	Dwg C2.21 (12) notes 1, 4, 19; C3.06 (18); C4.06 (24); C3.03 (15)	Is archaeological or paleontological monitoring required during excavation, and who pays for it and for stoppages during discovery?	Per Section 01 35 13.22, an archeological monitor may be provided by NPS at the discretion of the NPS. The Contractor is responsible for coordinating with and providing notice to the CO prior to beginning on-site work and ground disturbing activites. The scheduling and sequencing of construction activity is the responsibility of the Construction Contractor.
9/14/2026	114	4	Att. 1A App. A; Spec 01 11 00	Provide the NEPA and Section 106 mitigation commitments in full - revegetation, seasonal restrictions, thermal-feature setbacks, monitoring. There are no landscape or restoration sheets in the 94-sheet set. The only restoration details are C7.07 detail 3 (2 in topsoil in open areas) and C7.07 detail 4 (asphalt pavement), while the Site Improvements CLINs include soil preparation for restoration and C2.11-C2.13 note 4 requires mulch as needed in disturbed and scarified areas. No seed mix or revegetation specification appears anywhere.	Refer to the Construction Documents for information related to site restoration. See Section 32 90 00 in addition to other sections and plan sheets. The Construction Contractor is responsible for soil preparation, seeding is the responsibility of the NPS.
9/14/2026	115	4	Att. 1A App. A; Dwg C7.07 det 3-4; C2.11-C2.13 note 4; Spec 01 27 00	Are bear-country requirements for material storage, waste containment, and worker food storage specified, or left to the contractor?	Per Construction Specification 01 11 00 - Summary of Work - As the work is being performed in areas where wildlife are present, appropriate precautions for material storage, construction waste and debris containment, and construction contractor food storage and food waste shall be implemented by the construction contractor. The Government assumes no responsibility in this regard. See Construction Specification 01 11 00 - Summary of Work - Section 1.6 (M)(N)
9/14/2026	116	4	Spec 01 11 00	SF-1442 Block 13a states proposals are due 1300 local time; Attachment 6 states 2:00 p.m. MT. Confirm the deadline is 1300 Mountain Time.	Proposals are due at 2:00 p.m. Mountain Time.

Date Answered	Question No.	Amendment No.	Detail (**)	Description (*)	Response
9/14/2026	117	4	SF-1442 Block 13a; Attachment 6	The site visit (08/18-08/19/2026) has passed and was described as both virtual and an in-person meeting at the Albright Visitor Center. Will NPS post photos, video, or a sign-in list, or schedule a second visit? Confirm non-attendance is not disqualifying.	No other site visits are planned and the Power Point Presentation and accompanying attendance list was posted as part of Amendment 1. Non-attendance is not a disqualifying action.
9/14/2026	118	4	Section L; site visit notice	Confirm the amendment log to date. The solicitation file is marked v16 dated 06/17/2026, but Section J attachments carry dates through 07/31/2026.	Amendment 1 posted on August 19, 2026, Amendment 2 posted on August 26, 2026 and Amendment 3 posted on September 2, 2026. Section J refers to dates of specific documents and has no bearing on the dates of the amendments issued.
9/14/2026	119	4	Section J; solicitation cover	Pressure reducing valves are unpriced scope. C7.04 detail 3 notes 5 and 6 require PRVs on any service exceeding 80 psi, require the contractor to FURNISH ENOUGH PRVs TO INSTALL ONE ON EACH NEW SERVICE, require pressure testing at each location in the Contracting Officer's presence to determine whether one is needed, and direct that any uninstalled PRVs be given to the Contracting Officer as spares. No static pressure data appears anywhere in the set, no PRV appears on any plan sheet, and there is no pay item. Amendment 3 Q&A 8 stated that available pressure information is in the attached Project Reports, but the NE Entrance report provides demand figures only (1,000 gpm one-hour site fire flow, 150 gpm automatic suppression, 3.8 gpm peak hour) and no measured static or residual pressure. Provide measured static and residual pressure at each site, and confirm whether the obligation to furnish one PRV per service, sixteen total, is intended. The Amendment 3 Project Reports make this partly quantifiable and confirm the exposure. Mammoth models every service node at 87.03 to 100.19 psi, all above the 80 psi threshold, so all four Mammoth services require an installed PRV. Canyon models every service node at 55.14 to 66.23 psi, so no Canyon PRV is expected to be installed. NE Entrance has no measured pressure at all. Confirm the pricing basis is furnish sixteen and install four plus the NE Entrance count once pressures are provided, and confirm that unfurnished-but-uninstalled PRVs turned over as CO spares are paid at the same furnished value as installed units.	The Construction Contractor shall verify all pressures. Assume PRVs are required at all units.

Date Answered	Question No.	Amendment No.	Detail (**)	Description (*)	Response
9/14/2026	120	4	Dwg C7.04 det 3 notes 5-6; Spec 33 14 00 Sec 2.3.I; Amd 3 Canyon Project Report App. C; Amd 3 Mammoth Project Report App. C	Two products are specified without "or approved equal." The hydrant is a Mueller Super Centurion 250 (C7.05 detail 4 note 1), reinforced by note 5 requiring conformance to YNP Public Works standardization. The meter is a 1 in Sensus/Xylem iPERL with radio read antenna plus a Sensus iPERL remote reader, with note 4 requiring FlexNet compatibility. The grinder pump, retaining wall block, and air release valve all carry "or approved equal." Confirm whether the hydrant and meter are brand-restricted, and whether the remote reader and FlexNet programming are contractor-furnished. The Amendment 3 Project Reports add a hard approval gate on the meter: Spec 33 14 00 requires the contractor to submit documentation verifying the meters are compatible with the Park's existing FlexNet radio-read system, approved by the Contracting Officer in writing prior to ordering meters or components. Confirm the approved manufacturer and part number, and confirm NPS will	As defined in the Contract Documents, Sensus / Xylem water meters are required and shall be shown to be compatible with the Park's existing system. Hydrants shall also be as called out in the Contract Documents. Both are brand restricted as shown in the Contract Documents. The prescribed turn around time for submittals review is 30-days; therefore, the contractor must plan accordingly to ensure submittals can be reviewed and approved in time for possible lead times associated with the acquiring of such materials and supplies. Detailed review times for various submittals are included in Section 01 33 23 - Submittal Procedures.
9/14/2026	121	4	Dwg C7.05 det 4; C7.04 det 3	Schedule 40 versus SDR26 PVC conflict. C7.06 detail 2 note 3 states all sanitary sewer pipes and fittings shall be Schedule 40 PVC glue joint. The C5 plan notes and every profile specify SDR26 PVC. The note sits in a cleanout detail but is not scoped to the cleanout assembly. Confirm the governing pipe specification.	NOTE - update to sheet C7.06 : note to read : SDR26
9/14/2026	122	4	Dwg C7.06 det 2 note 3; C5.02, C5.03, C5.05, C5.06	Water and sewer crossing separation remedies are unquantified. C7.04 detail 6 defines the remedy where separation cannot be met: sewer built to water-main material and joint standards and pressure tested, or placed in casing extending 9 ft each side of the crossing, plus one foot of cement-treated backfill to a specified mix (0.45 sack, 42 lb cement, 325 lb water, 1,700 lb coarse aggregate, 1,845 lb sand per CY, 30-60 psi at 28 days). The C5 profiles show crossings at 1.5 ft, 1.89 ft, 2.2 ft and 2.5 ft, and 1.5 ft is exactly the 18 in minimum with zero tolerance on sheets that also state crossing depths are approximate and direct potholing. Any field variance triggers casing or flowable fill with no quantity and no pay item. Confirm how this is compensated.	All items associated with the various CLINs are paid lump sum; therefore, the contractor shall account for all work associated with such CLIN. No payment for a variance in quantities will be made.
9/14/2026	123	4	Dwg C7.04 det 6; C5.01-C5.06 profiles	Trench foundation material for unstable subgrade is unquantified. C7.04 detail 1 shows foundation material below the bedding, required where subgrade is unstable, depth varies, as directed by the Contracting Officer, with no pay item. At Mammoth, with groundwater logged at 8.3 ft and trench inverts at 8.67 ft, unstable trench bottom is likely. Provide an anticipated quantity or an allowance. Submit with Q15.	See Response to question 122

Date Answered	Question No.	Amendment No.	Detail (**)	Description (*)	Response
9/14/2026	124	4	Dwg C7.04 det 1; Att. 1A App. E	NE Entrance requires demolition of a structure with no hazardous materials survey. C2.12 calls for "remove and dispose structure wash house Bldg #230" with no dimensions, construction type, age, or salvage designation, and no asbestos or lead survey appears anywhere in the RFP. Specs 02 41 00 and 02 41 19 are included but no CLIN names building demolition. Provide the building's size and construction type and the hazardous materials survey. Related to Q47.	Construction Contractor shall determine demolition methodology. Building was available to view and inspect during pre-proposal site visit held 18/19 AUG 2026. Should suspect materials be encounted prior to/during demolition, it is the Construction Contractor's responsibility to notify the CO as soon as possible.
9/14/2026	125	4	Dwg C2.12 (10); Spec 02 41 00, 02 41 19	Tree removal quantities are undefined at all three sites. Canyon gives explicit five-needle pine counts but tags "conifer tree removal (TYP)" with no number; Mammoth states "remove trees (including stumps/root balls) within the construction limits or as indicated by the NPS CO"; NE Entrance shows "tree removal (TYP)" with symbols only. Note 1 has the CO marking and inventorying trees in the field prior to removal, note 5 says construction activities may identify additional trees requiring complete stump removal, and note 6 says hazard trees may require removal and are not identified. Provide a tree inventory by site with counts and caliper ranges, and confirm how trees identified after award under notes 5 and 6 are compensated.	Hard counts will not be made available. Offerors are advised to develop and submit pricing based upon the information available within the Construction Documents and observations made in person during the 18/19 AUG 2026 site visit to the best of your ability.
9/14/2026	126	4	Dwg C2.11-C2.13 (9-11), notes 1, 5, 6	Sixty five-needle pines are marked for removal at Canyon - 52 within the LOD plus separate callouts of 1, 4 and 3. Five-needle pine is whitebark pine, federally listed, and the USFWS Programmatic Biological Opinion in Appendix B imposes 10 m equipment buffers; C1.03 note 12 imposes a 33 ft buffer. The drawings protect whitebark pine in one place and remove sixty of them in another. Confirm removal of sixty whitebark pines is covered by the Programmatic BO, state what mitigation or compensatory planting is required, and confirm whether removal is seasonally restricted.	This information will not be available prior to the deadline for the proposal. Price the work to the best of your ability using the information provided.
9/14/2026	127	4	Dwg C2.13 (11); Att. 1A App. B; Dwg C1.03 note 12	C2.11 note 8 requires the sanitary line to be re-routed as shown on C5.02 PRIOR TO DEMO, making the new 8 in main and the MA 3356 connection predecessors to demolition, which is in turn a predecessor to grading and foundations - the whole chain inside one season. The reach that must go first is the one carrying the plan-versus-profile invert conflict in Q25. Confirm the sequencing requirement and address it together with Q25 and Q26; a late answer on Q25 costs the season, not just the reach.	See specifications for additional requirements including 01 11 00. Bypassing or other temporary measures are the responsibility of the contractor.

Date Answered	Question No.	Amendment No.	Detail (**)	Description (*)	Response
9/14/2026	128	4	Dwg C2.11 (9) note 8; C5.02 (26)	Demolition depths are not given and the spoil has no stated destination. Canyon alone: approx 43,165 SF gravel parking, 21,765 SF gravel road, 1,118 SF and 330 SF asphalt - roughly 66,400 SF given in area only with no depth. C2.11-C2.13 note 4 then requires scarification to 12 in over all of it and 6 in over non-vehicular compacted soils, plus mulch as needed. Amendment 3 Q&A 11 and 12 have now established that there is no Government disposal site available for these materials and that offerors are responsible for locating and paying for legal offsite disposal. The remaining gap is depth: provide the existing gravel and asphalt section thickness at each site so the volume can be computed.	Depths of gravel and asphalt not available. No as Built information is available
9/14/2026	129	4	Dwg C2.11-C2.13 (9-11), note 4	Confirm the extent of restoration required at the Mammoth laydown and concrete washout area. Amendment 3 Q&A 20 states that the contractor is responsible for removing all unneeded concrete material from the project site after completion at no additional cost to the Government, and that if this requires re-paving the contractor is responsible for those costs. The area shown on C2.11 is existing asphalt at the Rec Center parking lot. Confirm the area to be repaved and the required section, or confirm that a concrete washout constructed on a protective mat that leaves the existing asphalt undamaged satisfies the requirement without repaving.	A concrete washout constructed on a protective mat that leaves the existing asphalt undamaged satisfies the requirement without repaving.
9/14/2026	130	4	Amd 3 Q&A 20; Dwg C2.11 (9)	The Canyon culvert is a replacement, not a new installation. C2.13 calls for "remove and replace existing culvert, see sheet 33" with no size, material, or length given for the culvert being removed. Provide those. Note this also bears on Q43: if the work is replacing an existing culvert at a fixed road grade, the cover deficiency may be inherited from the existing condition rather than a drafting error.	Existing culvert is CMP. Proposed culvert design is shown on the plan sheets
9/14/2026	131	4	Dwg C2.13 (11); C5.09 (33)	BMP quantities are not the bid basis by their own terms. C2.11-C2.13 note 3 states BMPs shall be adjusted based on the final SWPPP, and the SWPPP is contractor-furnished and engineer-stamped per civil note 6. Confirm whether the quantities shown are minimums, the bid basis, or estimates subject to adjustment at contractor cost: Canyon 3,279 LF construction limit fence and 1,183 LF wattles; Mammoth 2,240 LF CLF, 335 LF wattles, 395 LF silt fence; NE Entrance 877 LF CLF, 443 LF wattles. Separately, Mammoth receives 395 LF of silt fence while NE Entrance receives none despite 3:1 fill slopes and grades to 19 percent - confirm that is intentional.	BMPs shown are for reference only. Contractor is responsible for SWPPP and any required BMPs.

Date Answered	Question No.	Amendment No.	Detail (**)	Description (*)	Response
9/14/2026	132	4	Dwg C2.11-C2.13 (9-11), note 3; C1.03 note 6	Entry steps are called for at nearly every building with no detail anywhere in the set. All three sites show "install steps (# steps vary) (TYP)" or "install stairs (# steps vary) (TYP)"; A101A adds "provide stairs as required by site specific grading; re civil"; and neither C7.01-C7.07 nor the architectural set contains a stair detail. Rise is derivable from FFE less adjacent finished grade (approximately 20 in at Canyon, 22 in at Mammoth, 25 in at NE Entrance, so three to four risers), but no tread, riser, landing or footing dimension is given, and the elevations confirm handrails at the entries. Provide a stair detail, or confirm risers are to be sized by the contractor to the FFE and finished grade shown, and confirm which CLIN carries the entry stairs.	See section 01 27 00, if no CLIN exists for a portion of the work, include costs in a related item. Steps to confirm to FFE elevations and follow IBC 1011.5.2 for rise and run. Offeror proposals shall include all work necessary to deliver a complete project conforming to the Construction Documents.
9/14/2026	133	4	Dwg C3.03-C3.05; C4.01-C4.06; C7.02; A101A (61); A200A (67)	The purpose of the 5 ft by 5 ft concrete pads is not stated. Called out as typical at Mammoth Buildings 1 through 4 referencing C7.02 detail 1, with no label for what they serve (condenser, transformer, meter, refuse). Confirm what they support and which CLIN carries them; if they are equipment pads, the equipment may fall in the delegated-design scope. Relates to Q8.	Pads are for pedestrian access only. Site Development CLIN. re CLIN question - Section 01 27 00 defines in general each CLIN. As stated in 01 27 00, if no CLIN exists for a portion of the work, include costs in a related item. The Contract Price shall include all work necessary to deliver a complete project conforming to the Contract Documents.
9/14/2026	134	4	Dwg C3.01 (13); C3.02 (14); C7.02 det 1	Mammoth pavement patch is unquantified. C3.02 calls for "install pavement patch (TYP)" referencing C7.07 detail 4 with no area given. C2.11 gives approx 9,005 SF of sawcut and remove asphalt plus four undimensioned flush-driveway removals. Confirm whether the 9,005 SF is the patch quantity or whether patching is additional.	Construction Contractor responsible for identifying the final pavement area required. It is permissible to scale quantities off of the 100% Final Construction Documents. Construction Contractor will be responsible for repairing any additional pavement they damage in the conduct of the work, at no additional cost to the Government.
9/14/2026	135	4	Dwg C3.02 (14); C2.11 (9); C7.07 det 4	Canyon parking stall count is not tabulated. Ten buildings with alternating valley-pan-and-parking and curb-and-gutter segments along roughly 435 LF of Badger Road frontage, 19.5 ft by 9 ft stalls and one 16 ft ABAAS space, but no stall count anywhere. Provide a stall schedule, noting S001 note 6 directs that scaled dimensions not be used. Submit with Q38.	Note 1 on S001 refers to those sheets it is listed on including structural sheets. Refer to plans for parking stall numbers
9/14/2026	136	4	Dwg C3.04 (16); C3.05 (17); C7.03 det 4-5; S001 note 6	The Canyon earthen ditch has flowline elevations but no cross section. C4.04 gives FL 7938.84 at STA 101+89.22 OFF 20.00, FL 7940.44 at 103+49.22 OFF 20.00, and FL 7941.19 at 104+32.62 OFF 16.66 with an FL radius of 401 ft, roughly 245 LF. No width, depth, side slopes or lining is given and there is no ditch detail in the C7 series. C7.07 detail 2 compounds this by directing that the 10 ft dissipater width be adjusted "depending on actual ditch width per plan (final)" - deferring to a plan dimension that does not exist. Provide a ditch typical section.	Geometry shown in contours and cross slope labels on C4.04 and other sheets.

Date Answered	Question No.	Amendment No.	Detail (**)	Description (*)	Response
9/14/2026	137	4	Dwg C4.04 (22); C3.04 (16); C7.07 det 2	Two 2.0:1 fill slopes at Canyon have no slope stability basis. C4.05 shows 2.0:1 in the Building 9 and 10 area alongside 3.0:1 elsewhere; NE Entrance holds 3.0:1 throughout and Canyon holds 4.0:1 along the road, making these two locations the outliers. The Terracon report provides bearing values and embedment only, with no slope stability analysis and no recommended maximum slope, in silty sand over weathered bedrock. Confirm 2:1 was analyzed and state whether erosion matting or slope treatment beyond topsoil and mulch is required.	Follow plans for slope grading. No additional stability requirements unless shown on plans.
9/14/2026	138	4	Dwg C4.05 (23); Att. 1A App. D	NE Entrance grading limits are labeled approximate. C4.03 reads "APPROXIMATE GRADING LIMITS (TYP)" where Canyon reads "LIMIT OF GRADING" and Mammoth reads "GRADING LIMIT." On the site with 3:1 fill slopes and grades to 19 percent, an approximate limit of disturbance drives earthwork quantity, erosion control quantity, and the NPDES disturbed-acreage threshold. Confirm whether the NE Entrance grading limit is fixed.	Grading limits are fixed and based on site survey.
9/14/2026	139	4	Dwg C4.03 (21)	The trench excavation influence line may prohibit the utility depths the civil sheets require. S500 detail 2 draws a 1:1 influence line down from the footing and states BOT OF TRENCH EXCAVATION SHALL NOT EXTEND BELOW THIS LINE, with a 10 ft minimum horizontal dimension. Canyon sanitary inverts are 9.4 to 9.8 ft deep and the 8 in main runs along Badger Road with buildings set back from it. Confirm no utility trench violates the S500 detail 2 influence line; if any does, state whether the remedy is sequencing utilities before foundations, shoring, or footing deepening, and who bears the cost. The answer may reorder the entire Canyon sequence.	It is the contractors responsibility to verify existing utilities locations via 811 or other locating methodologies prior to excavation activities.
9/14/2026	140	4	Dwg S500 det 2 (93); C5.05 (29); C5.06 (30)	Three contractor-delegated engineering deliverables, in two states. S001 note 15 requires an engineered design confirming the as-built structure's adequacy for all surcharge loads from compaction, cranes, trucks and bulldozers, signed and sealed by a PE licensed in the jurisdiction and submitted to the EOR. Note 10 separately requires engineered designs of temporary shoring and bracing. S500 detail 2 note 3 makes the contractor responsible for maintaining excavation sides. Provide the submittal schedule and confirm these are the full extent of delegated structural engineering.	See plans and specifications for submittals requirements.

Date Answered	Question No.	Amendment No.	Detail (**)	Description (*)	Response
9/14/2026	141	4	Dwg S001 notes 10, 15; S500 det 2 note 3	Special inspections are fully tabulated with several continuous, and cost responsibility is unassigned. S002 lists five soils inspections (fill placement continuous) and ten concrete inspections (prior to placement, during placement, prestressing and grouting all continuous). Continuous means a full-time inspector during those operations, at three remote sites with 8am-5pm weekday work hours. The IBC statement on S002 says inspections are the owner's, performed by an approved agency other than the contractor, but no CLIN or specification section assigns the cost. Confirm whether NPS retains and pays the special inspector or whether it is contractor-furnished.	Construction Contractor is responsible for special inspections.
9/14/2026	142	4	Dwg S002 (88); Section B	Non-frost-susceptible structural fill under the garage slabs is unquantified and appears on no civil sheet. S001 note 20 requires a base of structural fill or non-frost-susceptible soil extending deeper than the frost depth beneath concrete slabs on grade, with a vapor barrier below the slab. Design frost depth is 48 in. At roughly 560 SF per garage bay that is approximately 83 CY per garage and 332 CY across four, all imported, weed-free certified, from a Park-inspected pit. No over-excavation or structural fill is shown on C4.01 or C4.02. Confirm this is intended and state how it is paid. Cite in Q22.	Native Fill may be used if it meets specification requirements
9/14/2026	143	4	Dwg S001 note 20; S500 det 15; C4.01 (19); C4.02 (20)	Footings must be deepened where they parallel existing utilities, with no quantity. S500 detail 3 requires the contractor to lower the bottom of footing to avoid surcharging existing subgrade utilities, using additional concrete or slurry, with no locations identified. Combined with civil note 23 stating existing utility locations are general and may be inaccurate, this is unquantified concrete at unknown locations. Identify which buildings are affected and state how deepening is compensated. Relates to Q46.	See plans and specifications for locations. Foundation locations designed to minimize impacts

Date Answered	Question No.	Amendment No.	Detail (**)	Description (*)	Response
9/14/2026	144	4	Dwg S500 det 3 (93); C1.03 note 23	Two open-ended scope clauses in the structural notes. S001 note 3 states "the scope of work is not solely defined by these documents." Note 4 states typical details apply throughout even where not referenced, and construction not fully shown shall be of the same size and character as similar conditions shown. On a firm fixed price against a set carrying a preliminary stamp, confirm that scope is limited to what the Contract Documents show and that note 3 is not a basis for direction without a change order.	Scope of project is as indicated per signed sealed Construction Documents dated August 18, 2026 issued as Part of Amendment 2 (100% final construction documents).
9/14/2026	145	4	Dwg S001 notes 3, 4	A001 general note 17 states that for the purpose of pricing and estimates, where there is a conflict or discrepancy in the drawings and/or specifications, the contractor shall price the higher cost item. Against a set stamped 100% Draft with an uncertified Quality Design Certification block, and against the drawing conflicts identified elsewhere in this list (Q25, Q26, Q27, Q28, Q29, Q43, Q78, Q102, Q107, Q108), that note transfers the entire cost of the design team's unresolved conflicts to the offeror at the highest-cost reading. Amendment 3 Q&A 10 further directs offerors to "consider the Construction Drawings to be accurate as drawn, and price the work accordingly," while inviting specific questions on particular items. That direction cannot be complied with where the drawings contradict themselves, which is the basis for the Drawing Conflict items on this list. Note also that the Government intends to award without discussions under FAR 52.215-1(f), so there is no negotiation stage in which a conflict can be resolved - every unresolved conflict is priced, not discussed. Confirm the order of precedence among the Contract clauses, specifications, and drawings under FAR 52.236-21, and confirm whether note 17 is intended to govern the FFP bid or is to be struck.	Please refer to the Final 100% Construction Drawings and Construction Specifications dated August 18, 2026 issued as Part of Amendment 2 denoted in response to Q75. See FAR 52.215-8 - Order of Precedence - Uniform Contract Format

Date Answered	Question No.	Amendment No.	Detail (**)	Description (*)	Response
9/14/2026	146	4	Dwg A001 note 17; FAR 52.236-21; cover sheet (1)	Interior fire suppression is required in all 16 units but its scope assignment conflicts and it has no CLIN. A101A, A101B, A102C and A102D carry a note requiring a delegated-design fire suppression system, Uponor AquaSAFE or approved equal, with drawings, hydraulic calculations and product data submitted to the NPS Fire Code Official or AHJ prior to installation. A001 note F1 assigns fire suppression to the modular building manufacturer, while note F2 makes the contractor responsible for contracting and coordinating the fire alarm and suppression subcontractors, and F6 sets NICET II/III/IV qualification requirements. Division 21 is marked N/A in the specifications. Amendment 3 Q&A 6 confirms that installation either at the plant or during the build process is acceptable, but does not address scope assignment. Confirm who furnishes and installs the sprinkler system, which CLIN carries it, whether a NICET-qualified fire protection subcontractor is a Key Trade requiring a letter of commitment, and how the NPS Regional Structural Fire review under F8 fits the schedule.	The Construction Contractor is obligated by the Construction Documents to provide an NFPA 13D compliant fire suppression system - means and methods for providing this requirement are the responsibility of the Construction Contractor.
9/14/2026	147	4	Dwg A001 notes F1-F8; A101A (61); A101B (62); A102C (65); A102D (66); Spec Div 21; Section H	No conduit lengths are given for any site electrical or telecom work. General note 1 on every E-series site sheet states junction box locations and conduit routing are schematic and requires a conduit and junction box layout plan submitted to the engineer prior to installation; note 4 states junction boxes and conduits are shown in approximate locations; and note 5 states all conduit lengths are approximate. The work includes 2 in primary, 2 in triplex service, 1.5 in and 2.5 in communications conduit at Mammoth and Canyon and 3 in primary and secondary at NE Entrance, at 36 in minimum cover for primary and secondary and 24 in for all other conduit per E10 detail 5. Provide conduit lengths by size and site, or confirm in writing that quantity variance from the post-award layout plan is a compensable change. E6 carries the same general notes 1, 4 and 5 for Canyon and likewise provides no conduit schedule, no junction box count and no linear footage.	The Construction Contractor is responsible for determining lengths based on Construction Documents.

Date Answered	Question No.	Amendment No.	Detail (**)	Description (*)	Response
9/14/2026	148	4	Dwg E1-E6 (41-46) notes 1, 4, 5; E10 det 5 (50)	The set cites at least four different code baselines. A000 lists 2024 IBC, 2024 IRC, 2021 UPC, 2023 NEC, 2024 IMC, 2024 IECC, 2024 IFGC, 2017 ANSI 117.1, 2024 IFC and 2024 IWUIC, with a Climate Zone 6B table showing both 2021 and 2024 columns and no indication which applies. S001 note 1 cites the 2021 IBC with ASCE 7-22 and ACI 318-19. A001 note 19 cites Chapter 6 of the 2021 IRC and IECC 2021 insulation. The E-series site sheets require compliance with NEC 2026 while A001 note E2 requires NEC 2023. Identify the governing code edition for each discipline. The insulation R-values in particular differ between the 2021 and 2024 IECC columns and drive the envelope cost. E6 general note 7 confirms NEC 2026 on the site electrical sheets against NEC 2023 in A001 note E2 and A000.	Current year code cycles apply for the codes baselines.
9/14/2026	149	4	Dwg A000 (51); A001 notes 19, E2; S001 note 1; E1-E6 note 7	Water heater sizing conflicts between two general notes sheets. A000 code note 5 requires 40 gallons for the 2 bedroom and 60 to 80 gallons for the 3 bedroom. A001 discipline note P5 requires electric water heaters at 50 gallons minimum for all two bedroom modules and 66 gallons minimum for all three bedroom modules. Confirm the governing sizes.	Water Heaters to be 50 gallon minimum
9/14/2026	150	4	Dwg A000 note 5 (51); A001 note P5 (52)	The plumbing isometrics on all four unit types use a distinct line type legended "OWNER/PURCHASER RESPONSIBILITY" to mark portions of the drain and vent piping. The term is undefined in this contract and does not correspond to any party named in the solicitation. Confirm whether that piping is Government-furnished, modular manufacturer scope, or site contractor scope, and identify the physical point at which it separates from the piping shown as contractor scope.	There is no government-furnished piping.
9/14/2026	151	4	Dwg P101A (79); P101B (80); P101C (81); P101D (82)	Foundation perimeter insulation and drain tile appear on the architectural assembly detail but on no structural or civil sheet. A003 shows concrete faced insulation board at the stem wall referencing A000 for R-values and directing the contractor to confirm frost depth with structural, plus drain tile at the footing. A000 requires a crawl space wall R-value of 15ci, or 19, or 13 with 5ci. Neither element appears on S500, S501 or any C-series sheet, and neither is quantified. Confirm both are in scope, provide the extent, and identify which CLIN carries them.	Confirmed as shown on A003. See section 01 27 00, if no CLIN exists for a portion of the work, include costs in a related item
9/14/2026	152	4	Dwg A003 (54); A000 (51); S500 (93); S501 (94)	A wood stove with a 48 in by 48 in hearth pad is shown in every unit type, and A001 note M5 requires it to be EPA compliant, but no chimney, flue or roof penetration appears on any elevation or roof plan, and no wood stove specification is included. Confirm who furnishes and installs the stove, hearth and flue, whether the flue penetration is compatible with the standing seam roof and the NPS Reference Manual 58 and IWUIC fire-resistive requirements cited on A000, and which CLIN carries it.	Contractor responsible for all stove elements. See Construction Documents (technical drawings and specifications). Include proposed components within the Factor 1 "Product Binder".

Date Answered	Question No.	Amendment No.	Detail (**)	Description (*)	Response
9/14/2026	153	4	Dwg A101A (61); A101C (63); A101D (64); A001 note M5; A200A-D	The site electrical key notes misdirect the meter base and telecom box detail. E1 and E2 refer to detail 3 on sheet E4, E3 refers to detail 3 on sheet E8, and E5 and E6 refer to detail 3 on sheet E9. The Power Meter and Telecom Box detail is detail 3 on sheet E10; sheets E4, E8 and E9 are the Canyon site plan and the NE Entrance and Canyon one-line diagrams. Correct the cross references. E6 key note 1 refers to detail 3 on sheet E9, a fourth instance of the same error; E9 is the Canyon Village one line diagram.	Electrical and telecom boxes required on each building as shown on the plans.
9/14/2026	154	4	Dwg E1-E6 (41-46) key notes; E10 det 3 (50)	Define the anchor rod and module set interface and its tolerance. The foundation plans label the module "MODULAR BLDG BY OTHERS" and the anchor bolts "AB BY OTHERS" with 7 in embedment on S500 detail 9, while Spec 03 30 00 places anchor rod installation in the concrete scope, and Spec 13 34 26 has the manufacturer submit anchor rod plans and templates before foundation work. On this project the site contractor would place the rods in its own concrete and a separate subcontractor would set the modules. Provide: (a) the placement tolerance for the anchor rods against the manufacturer's bolt pattern; (b) confirmation that the manufacturer's template and approved shop drawings will be furnished before the foundation pour, and the lead time; (c) who bears the cost if the as-placed rods do not match the delivered module - a mismatch is a demolition and repour of the site contractor's concrete for a pattern it did not produce; and (d) whether leveling, shimming, grouting and crawlspace closure at the stem wall follow the module set or the foundation. Separately, no crane pad, crane access or module laydown area is shown on C2.11, C2.12 or C2.13, and the NE Entrance staging area is approximately 2,975 SF - identify where the modules are staged and set at each site.	Construction Contractor responsible for coordination of requirements and scheduling with modular house manufacturer.
9/14/2026	155	4	Dwg S101 (89); S111 (90); S201 (91); S211 (92); S500 det 9 (93); Spec 03 30 00; Spec 13 34 26; C2.11-C2.13	The Amendment 3 Mammoth Project Report contradicts itself on whether a water main extension is contractor scope. Section 5.0 states the services to the units along Lower Mammoth Service Road will need to tie to a potable water main extension running along the Lower Mammoth Service Road, then states in the same paragraph that as only water services are being constructed, no gate valves or air release valves are being placed. Sections 1.0 and 3.0 describe only four service connections to the existing 6-inch mains on Powerhouse Rd and Boneyard Service Rd, and no main extension appears on C5.01 or C5.02. Confirm whether a Mammoth potable water main extension is within the scope of this solicitation and, if so, provide length, size, material, tie-in location, valving and profile.	Offeror proposals are recommended to be in accordance with the Construction Documents (technical drawings and specifications) - not the Project Reports.

Date Answered	Question No.	Amendment No.	Detail (**)	Description (*)	Response
9/14/2026	156	4	Amd 3 Mammoth Project Report Sec 1.0, 3.0, 5.0; Dwg C5.01 (25); C5.02 (26); Dwg A001 note 17	The three Project Reports state conflicting automatic fire suppression demands citing the same source document. The Canyon report Section 4.1 and the Mammoth report Section 4.1 both state 55 gpm citing the Modular Building Design Narrative. The NE Entrance report states 150 gpm citing the same document. All three sites use the same 2-inch HDPE combined domestic and fire service and the same 1-inch Sensus iPerl meter, and the Canyon and Mammoth hydraulic models deduct 7.5 psi of meter and pit loss at 55 gpm. State the governing automatic suppression demand at each site and confirm the 2-inch service and 1-inch meter remain adequate at the governing figure.	Offeror proposals are recommended to be in accordance with the Construction Documents (technical drawings and specifications) - not the Project Reports.
9/14/2026	157	4	Amd 3 Canyon Project Report Sec 4.1; Amd 3 Mammoth Project Report Sec 4.1; Amd 3 NE Entrance Project Report; Dwg C7.04 det 3; Spec 33 14 00	The Amendment 3 Mammoth Project Report Section 7.2 states the grinder pump sump for Building 1 will be located in the garage. The garage is drawn inside the modular unit floor plan on A101C and A101D and under the same continuous ridge on A200C and A200D, but the structural, civil and grading sheets show the garage as site built: S201 and S211 label only the 56 ft portion MODULAR BLDG BY OTHERS while detailing the garage slab, bearing wall footings and the grinder pump pad in the 20 ft bay; C3.01 and C3.02 call out CONSTRUCT GARAGE PER STRUCTURAL DRAWINGS separately from INSTALL 3 BEDROOM MODULAR UNIT; and C4.01 and C4.02 give each garage its own finished floor elevation below the unit. Confirm the garage is Contractor scope. On that basis, identify who furnishes and installs the wet well and its bolted fiberglass cover, the Zoeller 922 simplex package with M803 pump, and the hand off auto control panel with elapsed time meter and cycle counter; who provides the branch circuit and the slab penetration; and confirm the required sequence relative to module set, since the wet well and pit slab are foundation phase work while the sump cover is flush with a garage slab that is framed after the module is set.	See section 01 27 00, if no CLIN exists for a portion of the work, include costs in a related item. Contractor responsible for all work listed in contract documents.
9/14/2026	158	4	Amd 3 Mammoth Project Report Sec 7.2; Spec 33 30 00 Sec 2.7; Dwg C7.06 det 4; S501 det 14; A101C (63); A101D (64); S201 (91); S211 (92); C3.01 (13); C3.02 (14); Spec 13 34 26	Reconcile three stated lengths for the Mammoth 8-inch sanitary replacement. The Amendment 3 Mammoth Project Report states approximately 430 linear feet in Sections 1.0 and 3.0 and approximately 400 feet in Section 7.1. Amendment 3 Q&A 21 describes the abandoned Mammoth 8-inch sanitary as approximately 300 feet. State the governing replacement length and confirm whether the abandoned reach and the replacement reach are the same run or two separate runs.	Offeror proposals are recommended to be in accordance with the Construction Documents (technical drawings and specifications) - not the Project Reports.. New and existing lines may differ in lengths

Date Answered	Question No.	Amendment No.	Detail (**)	Description (*)	Response
9/14/2026	159	4	Amd 3 Mammoth Project Report Sec 1.0, 3.0, 7.1; Amd 3 Q&A 21; Dwg C5.02 (26)	The Amendment 3 Canyon Project Report Section 5.0 confirms the Canyon 8-inch main is a dead-end main terminating past the last service with a fire hydrant, one air release valve at the high point, and gate valves at no more than 500-foot spacing, and states the dead-end main will require periodic flushing to maintain water quality. Confirm the hydrant, air release valve and gate valve count are contractor-furnished and are shown on C5.04 and C5.06; and state whether flushing and any repeat disinfection during the interval between main installation in the 2027 season and unit occupancy in 2028 is a contractor obligation, and whether that flush water counts against the 10,000 gallon per day allowance in Q&A 14.	Correct, this is Construction Contractor furnished. See specifications for flushing requirements. Flushing allowance not included in gallon per day allowance.
9/14/2026	160	4	Amd 3 Canyon Project Report Sec 1.0, 5.0; Dwg C5.04 (28); C5.06 (30); C7.05 det 4; Amd 3 Q&A 14; Spec 33 14 00	Both Amendment 3 Project Reports are Wyoming DEQ Chapter 3 Permit to Construct applications prepared by Stantec for NPS, dated June 19, 2026 for Canyon and July 21, 2026 for Mammoth, and both state construction is anticipated to begin in the Fall of 2026. Confirm that NPS holds and will obtain the Chapter 3 Permits to Construct for the water and sewer work at all three sites consistent with Q&A 2, provide the current issuance status and expected issuance dates, and confirm no water or sewer construction is held pending a permit the contractor is required to obtain. Separately confirm what permitting authority governs the NE Entrance work, which is in Park County, Montana and outside WDEQ jurisdiction.	All government furnished permits have been obtained. Any items to be provided to the Construction Contractor shall be provided AFTER construction contract award.
9/14/2026	161	4	Amd 3 Canyon Project Report cover and Sec 1.0; Amd 3 Mammoth Project Report cover and Sec 1.0; Amd 3 Q&A 2; Dwg C1.03 note 6	The Amendment 3 Canyon Project Report includes as Appendix E a Basis of Design Report for the Canyon Village Wastewater Treatment Plant under a separate project number, YELL 310402. Confirm this appendix is provided for information only and that no treatment plant work, modification, tie-in, sequencing constraint or coordination obligation falls within the scope of this solicitation.	No treatment plant work, modification, tie-in, sequencing constraint or coordination obligation falls within the scope of this solicitation.
9/14/2026	162	4	Amd 3 Canyon Project Report App. E; Spec 01 27 00; Section C	The Amendment 3 Mammoth Project Report Table 1 reports a calculated residual pressure of 23.26 psi at Hydrant M3 flowing 1,000 gpm, 3.26 psi above the 20 psi Chapter 12 minimum, and 33.90 psi at Hydrant M1. Confirm the contractor bears no obligation for system modification, main upsizing, looping or hydrant relocation if a field flow test after construction fails to demonstrate the 20 psi minimum, given that the existing mains, their size, age and internal condition are Government-furnished conditions and any deficiency would originate upstream of the four new service connections.	No treatment plant work, modification, tie-in, sequencing constraint or coordination obligation falls within the scope of this solicitation.

Date Answered	Question No.	Amendment No.	Detail (**)	Description (*)	Response
9/14/2026	163	4	Amd 3 Mammoth Project Report Sec 4.2 Table 1, App. C; Spec 33 14 00; WY DEQ Ch. 12 Sec 16.d	Clarify the required content and level of detail for the Factor 1 supporting concept drawings. Confirm whether the concept drawing submittal is limited to the modular housing units and identify the minimum drawings expected - floor plans, profiles, sections, elevations, sketches, schematics or diagrams - for a responsive proposal.	Solicitation Factor 1 (Technical Factor) conceptual drawing(s) content is at the discretion of the Offeror - Factor 1, Item 2 solicitation language references plans, profiles, sections, elevations as well as sketches, schematics, and diagrams as appropriate to illustrate the key components the Construction Contractor intends to provide in response to solicitation requirements.
9/14/2026	164	4	Section L Factor 1	Confirm whether any page limitation applies to the Product Binder itself. Amendment 3 Q&A 4 confirms the Binder is separate from the Factor 1 fifteen-page limit but does not state whether the Binder is itself limited.	No page limit applis to this component of the solicitation proposal.
9/14/2026	165	4	Section L Factor 1; Amd 3 Q&A 4	Clarify whether resumes are required for personnel employed by key subcontractors, including the civil/site, mechanical/HVAC, electrical and fire protection subcontractors. If so, identify the required positions or job titles for which resumes must be submitted.	The required positions are noted variously within Factors 1-5 of the solicitation.
9/14/2026	166	4	Section L Factor 4; Section M Factor 2	Clarify whether existing CPARS or contractor performance evaluations, or previously completed Past Performance Questionnaires, may be submitted in lieu of obtaining a newly completed Attachment 6 questionnaire from each client reference.	No - please provide the PPQ
9/14/2026	167	4	Section L Factor 5; Attachment 6	Clarify the required project-site staffing when work is performed concurrently at geographically separated locations such as Mammoth and Canyon. Must each active site have a dedicated Superintendent, Quality Control representative and Site Safety and Health Officer present whenever work is being performed at that site, or may qualified personnel provide coverage across multiple active sites? Note that the concurrency occurs in both seasons: Mammoth and Canyon Village run concurrently from April through September 2027 approximately 40 road miles apart, and Canyon Village and Northeast Entrance run concurrently from April through August 2028 approximately 90 road miles apart by way of Mammoth and the Lamar Valley. Confirm whether the staffing answer is the same in both seasons, and whether the required presence is tied to any work occurring at a site or only to work of a particular type or risk level.	Yes, due to the geographic separation and travel distance/travel time between sites - positions must be present at all sites if work is to be perfomed/completed concurrently at all multiple sites per the Construction Contractor's methodology.
9/14/2026	168	4	Spec 01 31 00; 01 35 23; 01 40 00; Section L Factor 4; Amd 3 Q&A 5	Clarify the required onsite presence of the Project Manager. Is the Project Manager required to remain continuously onsite during active construction, or may the Project Manager travel between Mammoth, Canyon and Northeast Entrance while maintaining overall project management responsibilities? Confirm whether the answer changes when two sites are active concurrently, and specifically for the April through August 2028 period when Canyon Village and Northeast Entrance are both active and separated by roughly 90 road miles through the Lamar Valley, a drive of over two	No the PM is not required to be on site every day. It is up to the contractor to determine the frequency or duration of the PM time at the construction sites. The only positions required to be on site full time are Superintendent, Safety Officer and Quality Control.

Date Answered	Question No.	Amendment No.	Detail (**)	Description (*)	Response
9/14/2026	169	4	Spec 01 31 00; Section L Factor 4	Advise whether any additional Government-controlled campsites, trailer spaces, housing areas or other workforce lodging locations may be made available to the Contractor during either construction season beyond the fifteen trailer sites near Canyon Village, and identify location, capacity, utility availability, seasonal restrictions and fees. Separately confirm whether the Contractor may establish additional temporary worker housing or RV accommodations elsewhere within the park, and if so the acceptable locations, utility requirements, capacity limits, approval procedure and fees.	No Government housing or RV sites will be made available within the Park. The Construction Contractor is not obligated to utilize the RV sites noted as available for at Canyon. These are noted as an opportunity that may or may not be utilized by the Construction Contracto at their discretion. Costs and agreements associated with use of the Canyon sites are directly between the Construction Contractor and the Park..
9/14/2026	170	4	Spec 01 11 00 para 1.6.G; Dwg C1.01 notes	Identify the anticipated contractor staging and laydown areas at Mammoth, Canyon and Northeast Entrance, including approximate usable area at each location, and clarify whether additional staging or laydown areas outside the limits currently shown may be approved by the Contracting Officer during construction.	Laydown areas are clearly denoted on the drawings.
9/14/2026	171	4	Spec 01 11 00 para 1.6; Dwg C2.11-C2.13; C1.03 notes 3 and 22; Amd 3 Q&A 13; Amd 3 Q&A 26 (deferred)	Clarify whether protective exterior window shutters or window covers are required on the new modular housing units. If required, identify the units and locations and provide the applicable design, material, operational and performance criteria.	No they are not required.
9/14/2026	172	4	Spec 13 34 26; unit architectural sheets	Confirm whether the fire suppression system is the only delegated-design scope required under this contract. If additional delegated-design systems or components are required, identify each scope with its specification and drawing reference.	See contractor documents for full project requirements. Other items in contract documents may include additional items
9/14/2026	173	4	Spec 13 34 26; Div 21; S001 notes 10 and 15; 32 32 00	Confirm whether the Contractor is required to perform fire-flow testing at Mammoth, Canyon and Northeast Entrance and whether the resulting data is to be used by the Contractor's delegated fire-suppression designer. Identify the required test procedure, witnessing requirements, utility coordination requirements, acceptance criteria, and responsibility for corrective work if available fire flow is insufficient.	Refer to Question 44 response.
9/14/2026	174	4	Spec 33 14 00; Div 21; Amd 3 Project Reports App. C	Confirm the schedule restrictions and Government coordination requirements applicable to tree clearing for migratory bird nesting. Specifically confirm whether March 1 is the controlling seasonal date, the required advance notice for NPS biological inspection or clearance, the party responsible for identifying and marking protected trees and active nests, and the restrictions that apply if an active nest is identified within the planned clearing area.	Refer to question 98 and response.
9/14/2026	175	4	Spec 01 35 13; 31 11 00; 31 13 00; Att. 1A App. B	Drawing C5.01 identifies an existing 2-inch water line with size and depth to be confirmed and directs the Contractor to locate it. Confirm the known size, material, depth and approximate horizontal location of the existing water line at the proposed Mammoth connection, or confirm the Contractor is to field verify before finalizing the connection detail.	Construction Contractor shall field verify as the note indicates.

Date Answered	Question No.	Amendment No.	Detail (**)	Description (*)	Response
9/14/2026	176	4	Dwg C5.01 (25); Spec 33 14 00; Amd 3 Mammoth Project Report Sec 5.0	Provide the applicable USACE Nationwide Permit authorization and its conditions and confirm the exact field limits of the permitted Canyon wetland disturbance. Identify any required buffer or no-disturbance zone applicable to temporary access, equipment, stockpiles or dewatering discharge outside the permitted impact area.	A copy of the USACE Nationwide Permit will be provided upon award of contract. Limits of disturbance are as denoted on the drawings.
9/14/2026	177	4	Dwg C2.03; C3.04-C3.06; C5.05-C5.09; Spec 01 11 00 para 1.12.E; Att. 1A App. A	Identify any NPS-approved or prohibited dewatering discharge locations at Mammoth, Canyon and Northeast Entrance. Confirm whether discharge to existing drainage ditches or storm systems may be proposed subject to permit approval, or whether dewatering discharge must be routed to upland infiltration areas outside wetlands and resource-protection zones.	This will be covered in the contractor's SWPPP that is developed and submitted as a DIV 01 requirement for NPS review/acceptance/rejection prior to notice to proceed and is also required for permitting.
9/14/2026	178	4	Spec 31 23 19; 01 57 23; Att. 1A App. E	Specification 32 11 00 requires the Contractor to sample and test pulverized roadway material and perform the structural pavement design necessary to meet a minimum Traffic Index of 6.0. Provide any existing pavement cores, base-course testing, gradation, R-value or other geotechnical or material data available for Badger Road and the Canyon roadway work so offerors can reasonably estimate the quantity of supplemental crushed aggregate required.	Per the referenced specifcation selection, the Construction Contractor is obligated to perform the required investigatory actions, analysis, and design.
9/14/2026	179	4	Spec 32 11 00; Dwg C4.04-C4.06	Confirm whether NPS has established any project-specific seasonal paving cutoff dates or restrictions beyond the specification requirements, and whether alternate paving hours including early-morning, evening, night or weekend operations may be approved when necessary to maintain HMA temperature, quality and schedule.	NPS has not established any project-specific seasonal paving cutoff dates or restrictions beyond the specification requirements. Alternate paving hours including early-morning, evening, night or weekend operations will be considered when necessary to maintain HMA temperature, quality and schedule.
9/14/2026	180	4	Spec 32 12 00; 01 11 00 para 1.10-1.11	Clarify the exact limits of Contractor responsibility versus Flathead Electric for permanent service at Northeast Entrance, including transformer and service equipment, primary and secondary conductors, trenching, metering, connection fees, utility inspection, utility-company construction and energization. Provide any project-specific utility service agreement or design requirements applicable to this site.	Coordination with utilities will be required. See plan sheets and specifications for additional requirements and items to provide. Sheets with additional information include E1-E10 and Division 26 and others
9/14/2026	181	4	Spec 26 50 00; Spec 01 11 00 para 1.11.B; NE Entrance civil and electrical drawings	Clarify the allocation of permitting responsibility for water-quality and wetland-related permits and authorizations. Identify which Clean Water Act Section 401, Section 402 NPDES, Section 404 and Nationwide Permit approvals are Government-furnished and which must be obtained by the Contractor.	Copies of all government furnished permits will be provided after contract award. Refer to 01 31 00, Paragraph 1.9.B.

Date Answered	Question No.	Amendment No.	Detail (**)	Description (*)	Response
9/14/2026	182	4	Att. 1A App. A; Spec 01 11 00 para 1.12.E; 01 57 23; 31 25 00; Dwg C1.03 note 6	Clarify the delegated-design responsibility for the modular block retaining walls. Confirm whether the Contractor's engineer is responsible for the complete wall system including global stability, bearing, sliding, overturning, geogrid reinforcement, drainage and foundation preparation, and confirm which earth-pressure, bearing, surcharge, frost, groundwater and backfill parameters in the geotechnical appendices govern the final design.	Modular block retaining walls to be installed and constructed as shown on plans.
9/14/2026	183	4	Spec 32 32 00; Att. 1A App. C and D; Dwg C4.05	Identify whether electrical power, potable water, sanitary service and communications are available at the anticipated Mammoth or Canyon Contracting Officer field office locations. If not, confirm which temporary utility systems the Contractor is expected to provide and maintain.	Stub-outs for the listed utilities are not generally provided at the field office locations.
9/14/2026	184	4	Spec 01 50 00	Confirm whether the foundation configurations and dimensions shown in the Contract Drawings are mandatory minimum configurations, or whether the Contractor and modular manufacturer may revise foundation geometry, reinforcement, anchor locations and related details through sealed shop drawings, provided the final design meets all contract performance requirements and receives NPS approval.	Foundation design is predicated on dimensional configurations of the modular housing units. Differing dimensional configurations may be submitted for NPS review and may be approved if they meet current codes and requirements in the contract documents. All responsibility for additional design and engineering lies with the Construction Contractor. The NPS reserves all rights to approve/disapprove any proposed changes.
9/14/2026	185	4	Spec 13 34 26; 03 30 00; Dwg S101, S111, S201, S211, S500, S501	Will the Government consider extending the proposal due date given the volume of revised solicitation documents, subcontractor coordination, modular-manufacturer technical development, Product Binder requirements and multi-site pricing effort?	The proposal due date is hereby extended to September 28, 2026, at 2:00 p.m. Mountain Time.
9/14/2026	186	4	Section L; Amd 3 Q&A 18	Reconcile the Canyon Village transformer count. One-line diagram E9 shows all ten Canyon lots fed from a single utility transformer at 120/240V. Site plan E6, which is sheet 3 of 3 for Canyon, shows three pad mounted transformers within its limits alone, with additional transformers presumed on E4 and E5. State the total number of pad mount transformer locations at each of the three sites. The count sets the number of 4 ft by 4 ft by 4 ft H20 rated primary pulling and pad mount transformer vaults per E10 detail 1, and the number of pad mount lids, both of which are quantity bearing items priced from the drawings.	Oneline diagram updated. 5 transformers at Canyon.
9/14/2026	187	4	Dwg E9 (49); E6 (46); E4 (44); E5 (45); E10 det 1 (50)	Confirm which party furnishes and installs the pad mount lid. E6 key note 2 states the pad mount lid and transformer are utility provided and directs coordination with Northwestern Energy. The note on E10 detail 1 states provide pad mount lid per utility requirements where pad mount transformers are located, which reads as a Contractor obligation. Confirm which party furnishes and which installs the lid at each transformer location, and confirm whether the Contractor furnishes, sets and backfills the transformer vault beneath it.	Note on E10 deleted. See plan sheets for transformer lid requirements

Date Answered	Question No.	Amendment No.	Detail (**)	Description (*)	Response
9/14/2026	188	4	Dwg E6 (46) key note 2; E10 det 1 (50); A001 note 17 (52)	Confirm whether any three phase service is required. The E6 legend includes a symbol for a three phase padmount lid and utility transformer, but every one line diagram in the set shows single phase 120/240V service only: E7 Mammoth Lots 1 through 4, E8 NE Entrance Lots 1 and 2, and E9 Canyon Lots 1 through 10, each a 200A main circuit breaker at 35 kW connected load. If three phase service is required at any location, identify the site, the equipment served, the service size and the governing sheet. If the symbol is legend boilerplate carried across the site sheets, confirm that no three phase equipment, vault or transformer is contemplated at any site.	All utility services are 120/240V single phase.
9/14/2026	189	4	Dwg E6 (46) legend; E7 (47); E8 (48); E9 (49)	Confirm which party furnishes and installs the electrical work inside the four Mammoth garage bays. E101C and E101D show the garage door opener push button, the opener keypad, garage receptacles and garage lighting drawn within the modular unit electrical plan, and those sheets are produced from the manufacturer's unit model. The structural, civil, grading and electrical site sheets show the garage as site built: S201 and S211 label only the 56 ft portion MODULAR BLDG BY OTHERS while detailing the garage slab, bearing wall footings and grinder pump pad in the 20 ft bay; C3.01 and C3.02 call out CONSTRUCT GARAGE PER STRUCTURAL DRAWINGS as an item separate from INSTALL 3 BEDROOM MODULAR UNIT; C4.01 and C4.02 assign each garage its own finished floor elevation 1.66 to 1.75 ft below the unit; and E1 and E2 label the units 3 BEDROOM MODULAR UNIT WITH GARAGE. State whether the manufacturer prewires and terminates the garage branch circuits in a structure it does not build, or whether the Contractor installs them to the manufacturer's drawing, and identify where those circuits originate, where they terminate and who crosses the fire rated separation.	Construction Contractor is responsible for items noted within the inquiry.
9/14/2026	190	4	Dwg E101C (85); E101D (86); S201 (91); S211 (92); C3.01 (13); C3.02 (14); C4.01 (19); C4.02 (20); E1 (41); E2 (42); Spec 13 34 26	Confirm the treatment of exterior site lighting. No site, street, pathway, parking or building exterior lighting appears on any electrical site sheet at any of the three sites, and the 94 sheet set contains no photometric plan, pole schedule, luminaire schedule or lighting control detail. Confirm that exterior lighting is excluded from the Contract in its entirety, whether under a dark sky policy or otherwise, or identify the sheet and specification section that define it. If exterior fixtures at the units are furnished by the modular manufacturer, confirm that no Contractor furnished exterior lighting, poles, bases, circuiting, conduit or controls are required at any site.	All lighting required is identified in the Construction Documents (technical drawings and specifications).

Date Answered	Question No.	Amendment No.	Detail (**)	Description (*)	Response
9/14/2026	191	4	Dwg E1-E6 (41-46); E7-E9 (47-49); E10 (50); A001 notes E1-E5 (52)	Provide the electrical design for the Mammoth grinder pumps. C5.01 shows the force main at Building 1 as typical, and the sump pit appears at each 3BR unit with a garage, so four grinder pumps are carried at Mammoth. E7 shows Lot 1 with a load table identical to Lots 2 through 4, the same 200A 120/240V service at 35 kW connected, and the same 1 kW SUMP line item that appears at every lot at all three sites; it shows no dedicated grinder pump circuit, no control panel, no disconnect and no float or alarm wiring at any of the four lots. C7.06 detail 4 and Spec 33 30 00 require a simplex grinder package with a hand off auto control panel, elapsed time meter, cycle counter and high water alarm. Identify the branch circuit, panel location, controls, alarm and any required enclosure rating; and confirm the 200A service is adequate with the grinder load added, given that the 1 kW SUMP allowance appears at all sixteen lots and therefore does not represent the grinder.	One grinder pump is needed at Building 1. Install grinder pump and all required pump controls
9/14/2026	192	4	Dwg E7 (47); C7.06 det 4; Spec 33 30 00; Div 26	Solicitation states: “The offeror shall provide, with its offer, the following information that is required to make payment by electronic funds transfer (EFT) under any contract that results from this solicitation. This submission satisfies the requirement to provide EFT information under paragraphs (b)(1) and (j) of the clause at 52.232-34, Payment by Electronic Funds Transfer-Other than System for Award Management. (1) The solicitation number (or other procurement identification number). (2) The offeror’s name and remittance address, as stated in the offer. (3) The signature (manual or electronic, as appropriate), title, and telephone number of the offeror’s official authorized to provide this information. (4) The name, address, and 9-digit Routing Transit Number of the offeror’s financial agent. (5) The offeror’s account number and the type of account (checking, savings, or lockbox). (6) If applicable, the Fedwire Transfer System telegraphic abbreviation of the offeror’s financial agent. (7) If applicable, the offeror shall also provide the name, address, telegraphic abbreviation, and 9-digit Routing Transit Number of the correspondent financial institution receiving the wire transfer payment if the offeror’s financial agent is not directly on-line to the Fedwire and, therefore, not the receiver of the wire transfer payment.” Please confirm if offerors are in fact to submit this information with their proposal, and if so, in which section?	Yes - with the Price Proposal

Date Answered	Question No.	Amendment No.	Detail (**)	Description (*)	Response
9/14/2026	193	4	Solicitation, 52.232-38 SUBMISSION OF ELECTRONIC FUNDS TRANSFER INFORMATION WITH OFFER (JULL 2013)	Letters of commitment are requested in Factor 2. Should these in fact be provided in Factor 4, and can the government confirm they do not count against any page limitations?	Letters of Commitment will not count against page limitation.
9/14/2026	194	4	Solicitation, E. VOLUME I, TECHNICAL PROPOSAL – FORMAT, ORGANIZATION, CONTENTS, FACTOR 2 - MANAGEMENT APPROACH	A bonding letter from the bonding company is required. Can this be presented in an appendix that does not count toward the 10 page limit of Factor 2?	Yes
9/14/2026	195	4	Solicitation, E. VOLUME I, TECHNICAL PROPOSAL – FORMAT, ORGANIZATION, CONTENTS, FACTOR 2 - MANAGEMENT APPROACH	Company's EMR Rating is required. Is any proof required to be presented and if so can this be presented in an appendix that does not count toward the 10 page limit of Factor 2?	Yes - your insurance company can provide the required EMR rating for your firm on their letterhead. No it does not count towards page limitation.
9/14/2026	196	4	Solicitation, E. VOLUME I, TECHNICAL PROPOSAL – FORMAT, ORGANIZATION, CONTENTS, FACTOR 2 - MANAGEMENT APPROACH	Resumes are to be provided for the following key subcontractors: Civil site work -- including water and sewer; mechanical/HVAC; Electrical. This is unclear; please clarify the job titles of the key subcontractors whose resumes offeors are to provide.	Resumes for subcontractor on-site Project Manager and/or Subcontractor Team lead are required for key subcontracting trades noted (i.e., civil/site, MEP, FP, flatwork (i.e., asphalt and concrete) if differing from civil)
9/14/2026	197	4	Solicitation, E. VOLUME I, TECHNICAL PROPOSAL – FORMAT, ORGANIZATION, CONTENTS, FACTOR 4 - KEY PERSONNEL	Solicitation states: "Submit Past Performance information for previous experience performing work similar to this requirement from the previous five (5) years utilizing the attached Past Performance Questionnaire." Can offerors use existing PPQs and/or CPARS?	No - use the required format provided.
9/14/2026	198	4	Solicitation, E. VOLUME I, TECHNICAL PROPOSAL – FORMAT, ORGANIZATION, CONTENTS, FACTOR 5 - PAST PERFORMANCE	Due to complex requirements of this solicitation and large number of questions, will the government provide a 10 day extension to the due date?	The proposal due date is hereby extended to September 28, 2026, at 2:00 p.m. Mountain Time.
9/14/2026	199	4		In the project documents, the finish for the drywall calls for a level 5 finish. In recently touring a current housing project in the Old Faithful District, those units have a light texture finish (see attached photo). Would this finish be acceptable to apply to the upcoming project?	Finish may be submitted as part of the Facot 1 Technical Approach "Product Binder" - proposing a finish within the "Product Binder" differing from the noted level 5 finish shall not confer NPS acceptance of such. Proposing a differing finish is at the discretion of the Construction Contractor.

SECTION B – BID SCHEDULE

CONTRACT BID SCHEDULE

SOLICITATION NUMBER: 140P2026R0078
YELL 326141
PROJECT TITLE: Yellowstone Modular Units

Offerors are required to submit, at a minimum, one (1) Firm-Fixed-Price (FFP) offer that conforms to the solicitation documents with pricing for Base line items. Failure to do so may render the proposal unacceptable. On lump-sum line items, provide the total price only. If no specific line item exists for a portion of the work, include the costs in a related item. In case of error in calculation of extended prices, the unit price governs. In case of summation error, the total corrected amounts govern. Round totals and extended prices to whole dollars.

CONTRACT LINE-ITEM NUMBER (CLIN)	CONTRACT LINE ITEM (CLI) TITLE	QUANTITY	TOTAL PRICE
CLIN 01	Canyon Village Site Improvements	LS	$
CLIN 02	Canyon Village Standard Units	LS	$
CLIN 03	Canyon Village ADA Units	LS	$
CLIN 04	NE Entrance Site Improvements	LS	$
CLIN 05	NE Entrance Standard Units	LS	$
CLIN 06	NE Entrance ADA Units	LS	$
CLIN 07	Mammoth Site Improvements	LS	$
CLIN 08	Mammoth Standard Units	LS	$
CLIN 09	Mammoth ADA Units	LS	$
TOTAL BASE PRICE (Contract Line-Item Number 1 through 9)			$
All measurement and payment information are included in the project specifications, Section 01 27 00.			

End of Section B

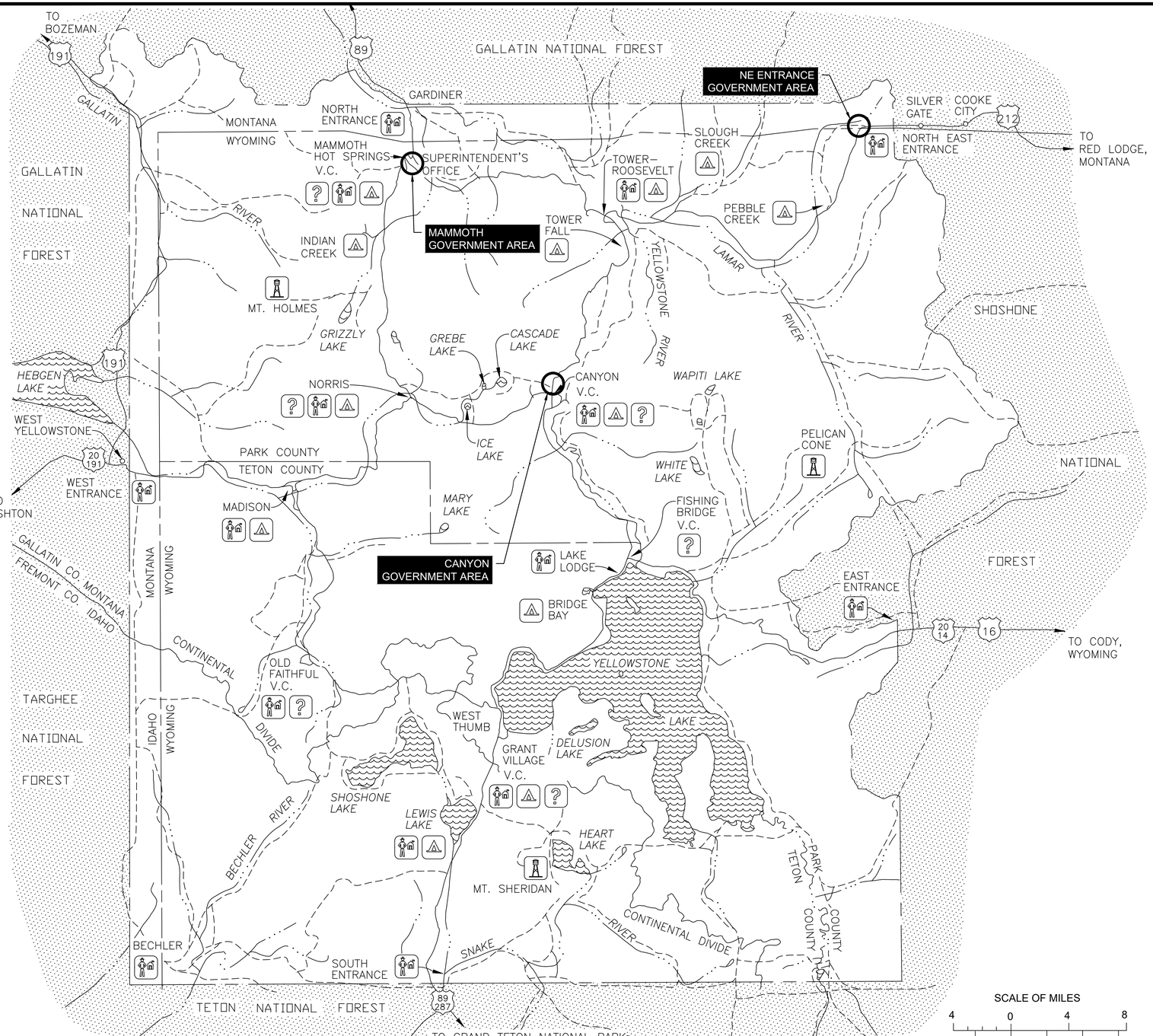

LEGEND

- PARK BOUNDARY
- STATE LINE
- COUNTY LINE
- PAVED ROAD
- TRAIL
- CREEK
- V.C. VISITOR CENTER
- RANGER STATION
- CAMPGROUND
- FIRE LOOKOUT
- INFORMATION CENTER

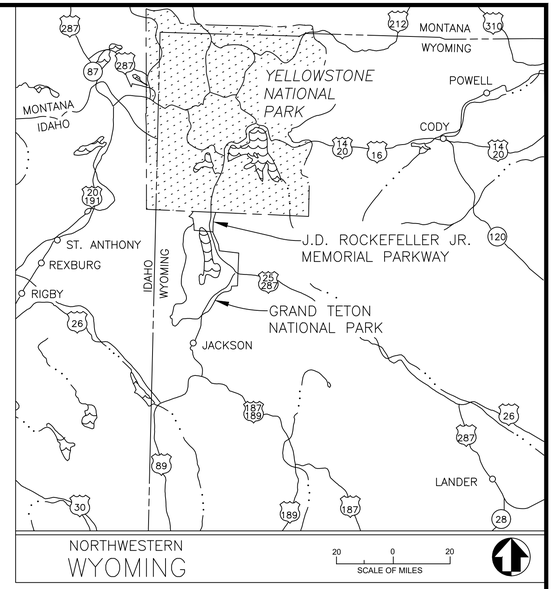

SCALE OF MILES: 4 0 4 8

SCALE OF KILOMETERS: 4 0 4 8 12

YELLOWSTONE NATIONAL PARK
WORLD HERITAGE SITE

CONSTRUCT MODULAR HOUSING FOR FEDERAL PARTNERS AND REPLACE LOST LAPEYRE HOUSING FOR PARK STAFF

MAMMOTH, NE ENTRANCE, CANYON VILLAGE

100% CONSTRUCTION DOCUMENTS
AUGUST 18, 2026

JESSE CARLSON No. 10552PE LICENSED PROFESSIONAL ENGINEER MONTANA
Professional Engineer JESSE CARLSON 20170 WYOMING Date

A/E FIRM	MARK	SHEET	REVISION	DATE	INITIAL
PRIME/GEOTECH: STANTEC CHEYENNE, WY	1	1-94	AMENDMENT 4 - BIDDING	09/11/26	PS

QUALITY DESIGN CERTIFICATION

- ☐ Prepared in Accordance with Design Development (Title I) _____ OR Drawing No.
- ☐ Variance from Design Development (Title I) Approved by Superintendent on _____ Date OR
- ☐ Construction Drawing Not Preceded by Design Development (Title I)

Project Manager _____ Date _____

CONSTRUCTION DRAWINGS

UNITED STATES
DEPARTMENT OF THE INTERIOR

NATIONAL PARK SERVICE
DENVER SERVICE CENTER

TITLE OF PROJECT
MODULAR HOUSING UNITS
LOCATION WITHIN PARK
MAMMOTH, NE ENTRANCE, CANYON VILLAGE
NAME OF PARK
YELLOWSTONE NATIONAL PARK
REGION: INTERMOUNTAIN | COUNTY: PARK | STATE: MT/WY

DRAWING NO. 101 198433
PMIS / PKG NO. 326141
SHEET 1 OF 94

BASIC DATA: 101/80,015 7/84; PARK MINI FOLDER 1978; REVISED & REDRAWN 1/95. UPDATED 11/98. SGS.

PLOT DATE: 9/11/2026 3:26 PM USER: SOUTHWORTH, PAUL
C:\USERS\PSOUTHWORTH\STANTEC\CRONIN, MEGHAN - NPS\YELL\DD\326141A_326104\CADV2022DRAWINGS\CIVIL\NE-CANYON\CANYON\C0.01_COVER.DWG

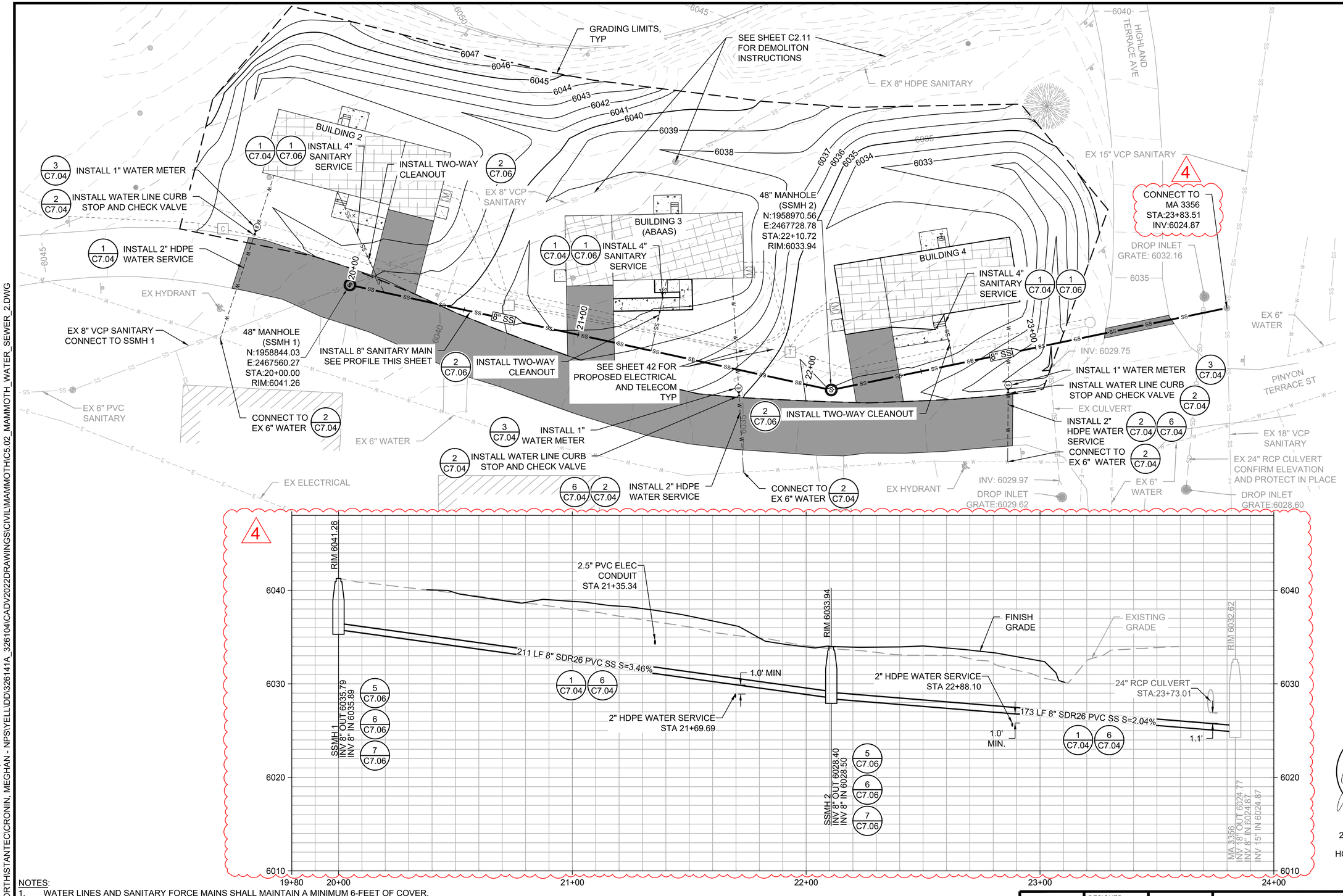

Professional Engineer JESSE CARLSON 20110 Date WYOMING

20 0 20 40

HORIZONTAL SCALE OF FEET" 1" = 20'

VERTICAL SCALE OF FEET: 1" = 5'

NOTES:

1. WATER LINES AND SANITARY FORCE MAINS SHALL MAINTAIN A MINIMUM 6-FEET OF COVER.
2. MAINTAIN A MINIMUM 10-FT HORIZONTAL SEPARATION & 1.5-FT VERTICAL SEPARATION BETWEEN POTABLE WATER AND SANITARY SEWER LINES. SEE DETAIL 6/C7.04.
3. SANITARY SERVICES SHALL BE SDR26 PVC AND SHALL BE LAID AT A MINIMUM SLOPE OF 2%.
4. WATER SERVICES SHALL BE BUTT-FUSED HDPE.
5. RESTORE UTILITY TRENCHES PER DETAILS 3 AND 4/C7.07.
6. CONTRACTOR SHALL STAKE PROPOSED WATER METER AND CURB LOCATIONS FOR APPROVAL BY THE CONTRACTING OFFICER.
7. CONNECTION TO EXISTING SANITARY MANHOLE (MA 3356) SHALL BE MADE BY CORING INTO EXISTING STRUCTURE AND INSTALLING A FLEXIBLE BOOT CONNECTOR WITH STAINLESS STEEL PIPE CLAMPS. MA 3356 WILL BE SUBJECT TO THE SAME LEAK TESTING AND ACCEPTANCE REQUIREMENTS AS NEW MANHOLES.

A/E FIRM	DESIGNED: JC	SUB SHEET NO.	TITLE OF SHEET
PRIME: STANTEC CHEYENNE, WY	CADD: BB/PS/AS	C5.02	MAMMOTH WATER AND SEWER PLAN & PROFILE SHEET 2 OF 2
	TECH. REVIEW: JC		YELLOWSTONE NATIONAL PARK
	DATE: 08/18/2026		DRAWING NO. 101 / 198433; PMIS / PKG NO. 326141; SHEET 26 OF 94

PLOT DATE: 9/11/2026 3:43 PM USER: SOUTHWORTH, PAUL
C:\USERS\PSOUTHWORTH\STANTEC\CRONIN, MEGHAN - NPS\YELL\DD\326141A_326104\CADV2022DRAWINGS\CIVIL\MAMMOTHIC5.02_MAMMOTH_WATER_SEWER_2.DWG

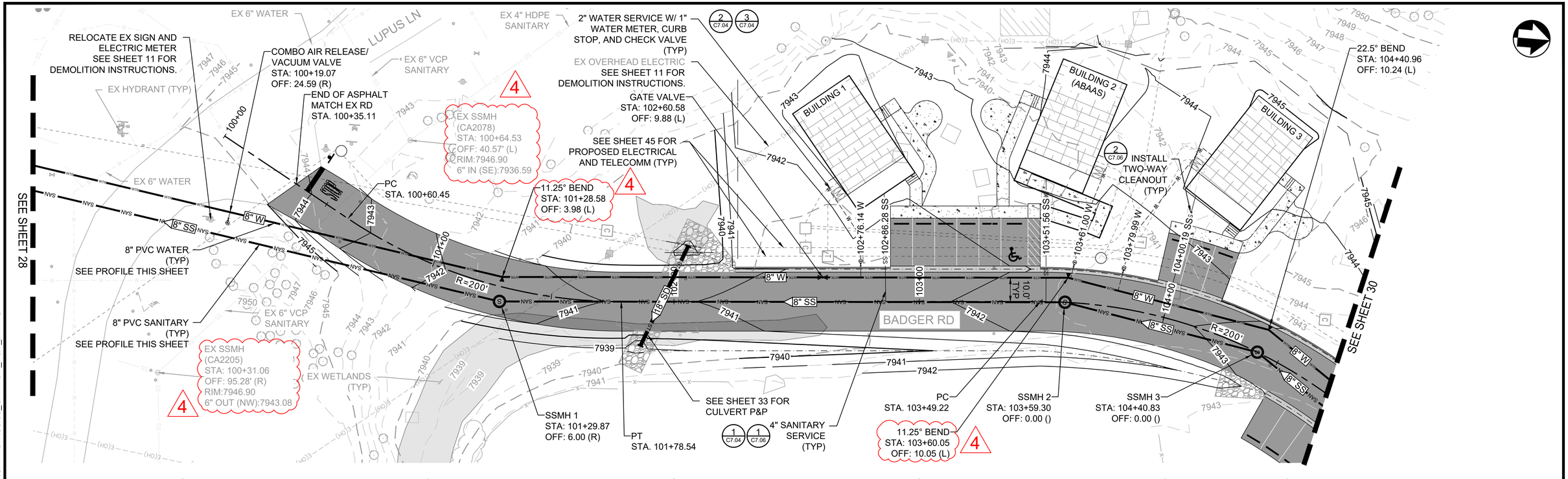

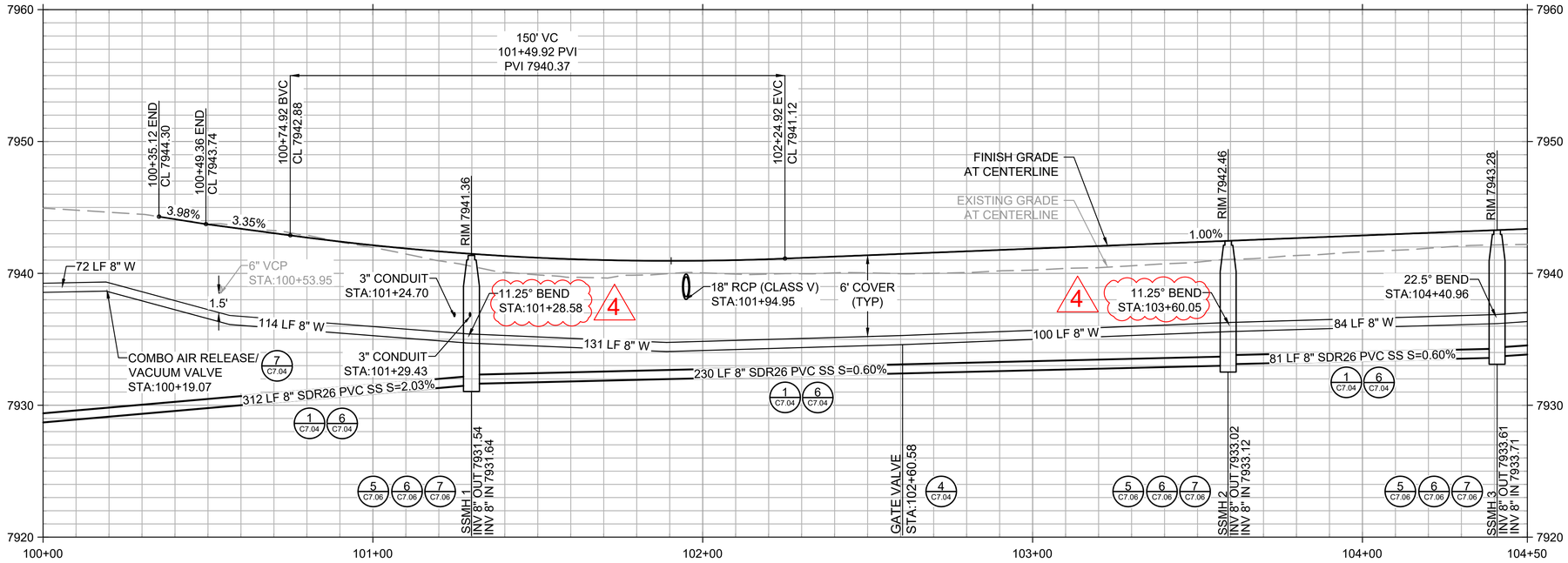



20 0 20 40
HORIZONTAL SCALE OF FEET: 1" = 20'

VERTICAL SCALE OF FEET: 1" = 5'

NOTES:
1. MAINTAIN A MINIMUM 10-FT HORIZONTAL SEPARATION 1.5-FT VERTICAL SEPARATION BETWEEN POTABLE WATER AND SANITARY SEWER LINES.
2. SANITARY SERVICES SHALL BE SDR26 PVC AND SHALL BE LAID AT A MINIMUM SLOPE OF 2%.
3. WATER SERVICES SHALL BE BUTT-FUSED HDPE.
4. SEE SHEET 33 FOR STORM DRAIN PLAN AND PROFILES.
5. CROSSING LOCATION DEPTHS IN PROFILE VIEW ARE APPROXIMATE. AS-BUILT RECORD DRAWINGS WERE USED WHEN AVAILABLE. THE CONTRACTOR SHALL POTHOLE TO CONFIRM CROSSING DEPTHS IN THE FIELD.
6. WATER MAINS SHALL BE AWWA C900 DR18 AND MAINTAIN A MINIMUM COVER OF 6-FEET FROM FINISHED GRADE.
7. CONTRACTOR SHALL STAKE PROPOSED WATER METER AND CURB LOCATIONS FOR APPROVAL BY THE CONTRACTING OFFICER.

A/E FIRM PRIME: STANTEC CHEYENNE, WY	DESIGNED: JC CADD: AS TECH. REVIEW: JC DATE: 08/18/2026	SUB SHEET NO. C5.05	TITLE OF SHEET CANYON VILLAGE PLAN & PROFILE SHEET 2 OF 4 YELLOWSTONE NATIONAL PARK	DRAWING NO. 101 198433 PMIS / PKG NO. 326141 SHEET 29 OF 94

PLOT DATE: 9/11/2026 3:48 PM USER: SOUTHWORTH, PAUL
C:\USERS\PSOUTHWORTH\STANTEC\CRONIN, MEGHAN - NPS\YELL\DD\326141A_326104\CADV2022DRAWINGS\CIVIL\NE-CANYON\NC5.03_CANYON_P&P_2.DWG

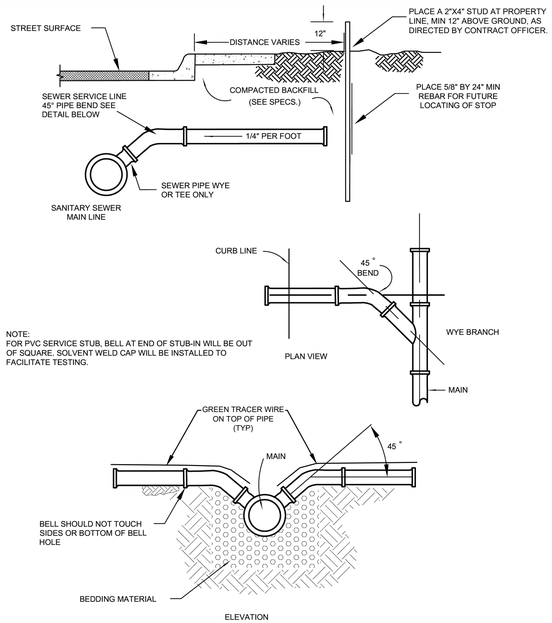

1 C7.06 SANITARY SEWER SERVICE LINE
NOT TO SCALE

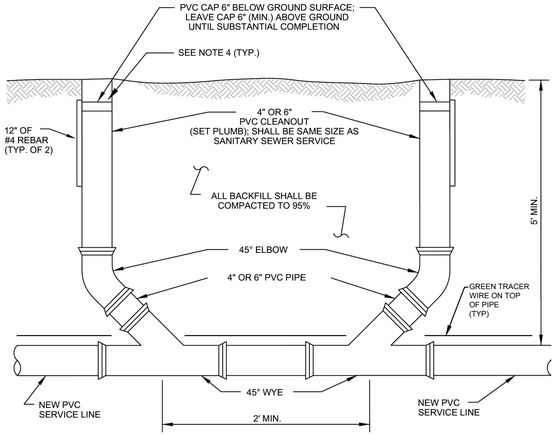

NOTES:

1. LOCATIONS SHALL BE DETERMINED IN THE FIELD BY THE ENGINEER.
2. FOR CLEANOUTS IN A DRIVEWAY OR ROAD, INSTALL A 2' SQ. CONCRETE COLLAR WITH A RECESSED METAL CAP FOR CLEANOUT.
3. ALL SANITARY SEWER PIPES & FITTINGS SHALL BE SDR26 PVC.
4. COVERS FOR CLEANOUTS IN HARD SURFACED AREAS SHALL CONSIST OF A 10" LONG SLIP-TYPE VALVE BOX TOP SECTION WITH A LID MARKED "SEWER"

4

2 C7.06 TWO-WAY SANITARY SEWER CLEANOUT
NOT TO SCALE

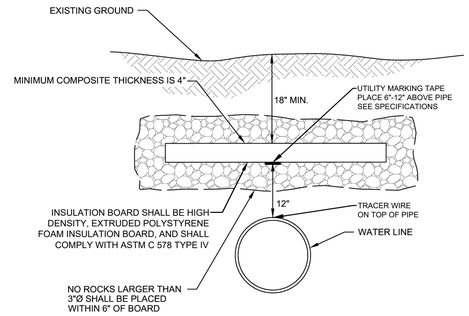

NOTES:

1. IF DEPTH OF COVER IS LESS THAN 3.5 FEET, BOARD SHALL EXTEND A MINIMUM OF FOUR FEET EITHER SIDE OF CENTER OF PIPE.
2. IF DEPTH OF COVER IS BETWEEN 3.5 AND 6.0 FEET, BOARD SHALL EXTEND A MINIMUM OF THREE FEET EITHER SIDE OF CENTER OF PIPE.

4

3 C7.06 INSULATION BOARD INSTALLATION
NOT TO SCALE

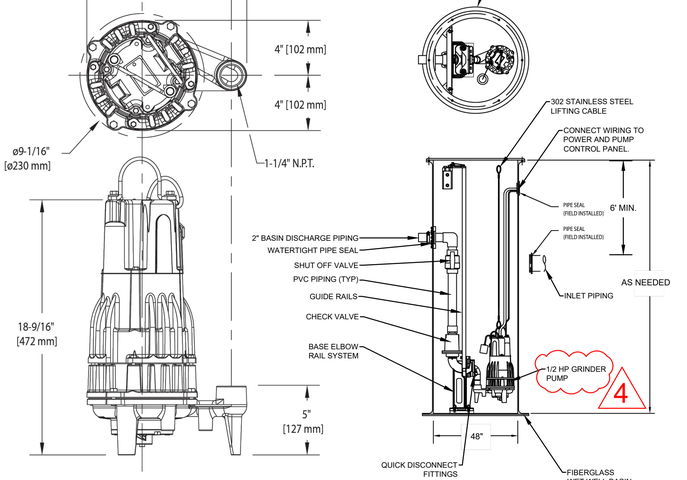

NOTES:

1. GRINDER PUMP SHALL BE A ZOELLER SIMPLEX 48" X 120" GRINDER PACKAGE WITH M803 OR APPROVED EQUAL IN TERMS OF SIZE, PERFORMANCE, AND FUNCTIONALITY.
2. SEE ARCHITECTURAL PLANS AND STRUCTURAL PLANS FOR WET WELL LOCATION.
3. FLOATS SHALL BE INSTALLED TO A PVC FLOAT TREE THAT IS MOUNTED TO THE SIDE OF THE WET WELL. THE FLOAT TREE SHALL BE EASILY REMOVABLE, IN ITS ENTIRETY, WITHOUT HAVING TO ENTER THE WET WELL. FLOATS SHALL BE PROGRAMMED TO TURN THE PUMP "OFF" WHEN WET WELL LEVEL IS 1.83' ABOVE THE SUMP BOTTOM, PUMP "ON" WHEN WET WELL LEVEL IS 4' ABOVE THE SUMP BOTTOM, AND PUMP "ALARM" WHEN WET WELL LEVEL IS 4.5' ABOVE THE PUMP INTAKE.
4. FLOATS SHALL CONNECT TO THE PUMP CONTROL PANEL. PUMP CONTROL PANEL SHALL BE MOUNTED TO THE INSIDE GARAGE WALL. PUMP CONTROL PANEL SHALL INCLUDE A HAND-OFF-AUTO (HOA) SWITCH, AN ELAPSED TIME METER, AND A PUMP CYCLE COUNTER.
5. ALL METAL FASTENERS USED IN THE WET WELL SHALL BE STAINLESS STEEL (GRADE 302).
6. SHUT-OFF VALVE SHALL BE EASILY REACHABLE AND OPERABLE FROM THE TOP OF THE WET WELL.

4 C7.06 GRINDER PUMP
NOT TO SCALE

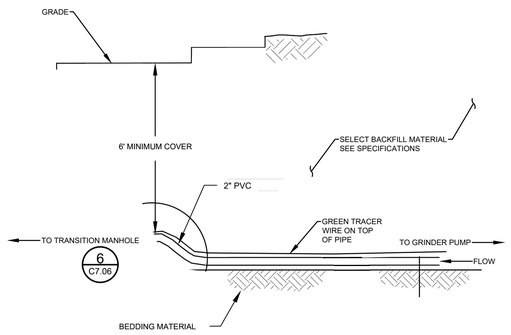

5 C7.06 FORCE SEWER SERVICE LINE
NOT TO SCALE

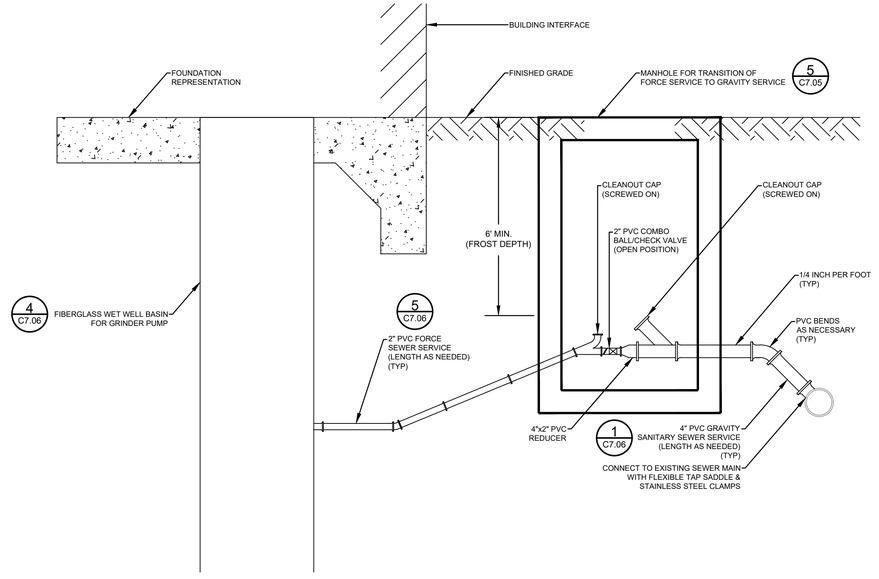

6 C7.06 FORCE TO GRAVITY SERVICE TRANSITION
NOT TO SCALE

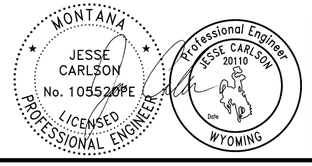

A/E FIRM PRIME: STANTEC CHEYENNE, WY	DESIGNED: JC CADD: AS TECH. REVIEW: JC DATE: 08/18/2026	SUB SHEET NO. C7.06	TITLE OF SHEET CIVIL DETAILS SHEET 6 OF 7 YELLOWSTONE NATIONAL PARK	DRAWING NO. 101 198433 PMIS / PKG NO. 326141 SHEET 39 OF 94

PLOT DATE: 9/11/2026 3:37 PM USER: SOUTHWORTH, PAUL
C:\USERS\PSOUTHWORTH\STANTEC\CRONIN, MEGHAN - NPSIYELL\DD\326141A_326104\CADV2022DRAWINGS\CIVIL\NE-CANYONICANYON\C7.01_DETAILS_1.DWG

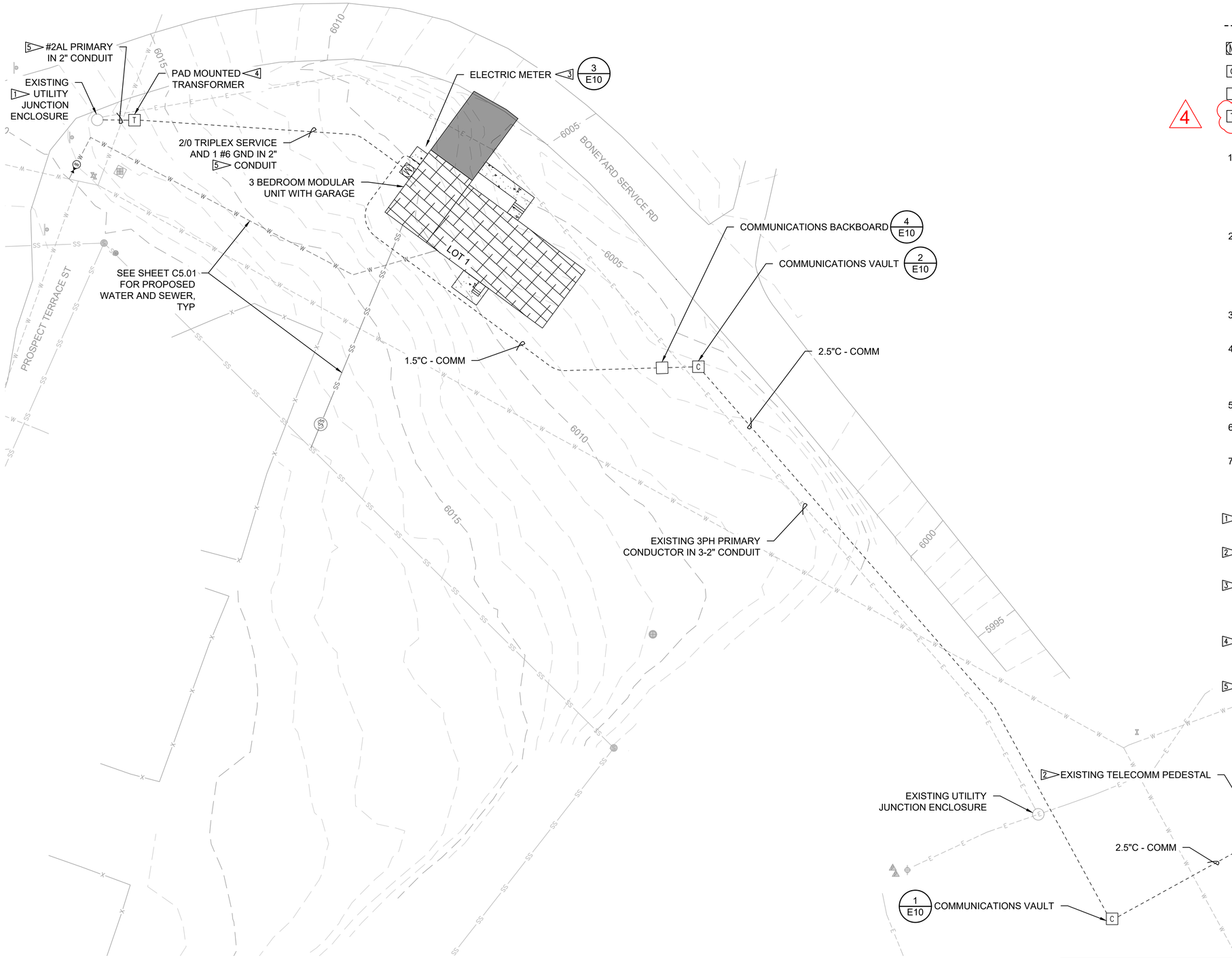

LEGEND

- - - UNDERGROUND RACEWAY

M COMBINATION 200A METER SOCKET WITH DISCONNECT

C 2' X 3' X 3' COMMUNICATIONS VAULT

COMMUNICATIONS BACKBOARD

4 T ~~THREE PHASE~~ PADMOUNT LID AND UTILITY TRANSFORMER

GENERAL NOTES:

1. JUNCTION BOX LOCATIONS AND CONDUIT ROUTING ARE SCHEMATIC. ALIGN JUNCTION BOXES WITH PAVEMENT EDGES. CONDUIT ROUTING SHALL AVOID TREES. SUBMIT CONDUIT AND JUNCTION BOX LAYOUT PLAN TO ENGINEER PRIOR TO INSTALLATION.
2. MAINTAIN AND PROTECT ALL EXISTING UNDERGROUND UTILITIES. CONTRACTOR TO PROVIDE LOCATE PRIOR TO ANY EXCAVATION. PRIOR TO STARTING CONSTRUCTION, CONTRACTOR SHALL CALL "ONE-CALL" FOR UTILITY LOCATIONS.
3. ALL SPARE/EMPTY CONDUIT TO BE PROVIDED WITH NYLON PULL STRINGS.
4. ALL JUNCTION BOXES AND CONDUITS ARE SHOWN IN APPROXIMATE LOCATIONS. VERIFY LOCATION OF PROPERTY LINE, EASEMENTS AND UTILITIES PRIOR TO PLACEMENT.
5. ALL CONDUITS LENGTHS ARE APPROXIMATE.
6. GROUND ALL IN-GROUND JUNCTION BOXES, HAND HOLES, AND PULL BOXES.
7. ELECTRICAL WORK SHALL COMPLY WITH NEC 2026.

KEY NOTES:

1. INTERCEPT EXISTING UTILITY JUNCTION ENCLOSURE. COORDINATE WITH NORTHWESTERN ENERGY.
2. INTERCEPT EXISTING TELECOMM PEDESTAL. COORDINATE WITH SERVICE PROVIDER.
3. PROVIDE METER BASE AND TELECOMM BOX AT EACH MODULAR UNIT PER UTILITY REQUIREMENTS. COORDINATE WITH SERVING UTILITY. REFER TO DETAIL 3 ON SHEET E4.
4. UTILITY PROVIDED PAD MOUNT LID AND TRANSFORMER. COORDINATE WITH NORTHWESTERN ENERGY.
5. UTILITY PROVIDED CONDUIT AND CONDUCTORS. COORDINATE WITH NORTHWESTERN ENERGY.

20 0 20 40
SCALE OF FEET

Professional Engineer TIMOTHY L. JANOF 8320 WYOMING

A/E FIRM	DESIGNED:	SUB SHEET NO.	TITLE OF SHEET	DRAWING NO.
PRIME: STANTEC CHEYENNE, WY	JC	E1	MAMMOTH ELECTRICAL AND TELECOM SITE PLAN 1 OF 2	101 198433
	CADD: BB/PS/AS			PMIS / PKG NO. 326141
	TECH. REVIEW: JC			SHEET 41 OF 94
	DATE: 08/18/2026		YELLOWSTONE NATIONAL PARK	

PLOT DATE: 9/11/2026 2:46 PM USER: SOUTHWORTH, PAUL
C:\USERS\PSOUTHWORTH\STANTEC\CRONIN, MEGHAN - NPS\YELL\DD\326141A_326104\CADV2022DRAWINGS\CIVIL\MAMMOTH\C6.01_MAMMOTH_ELECTRICAL.DWG

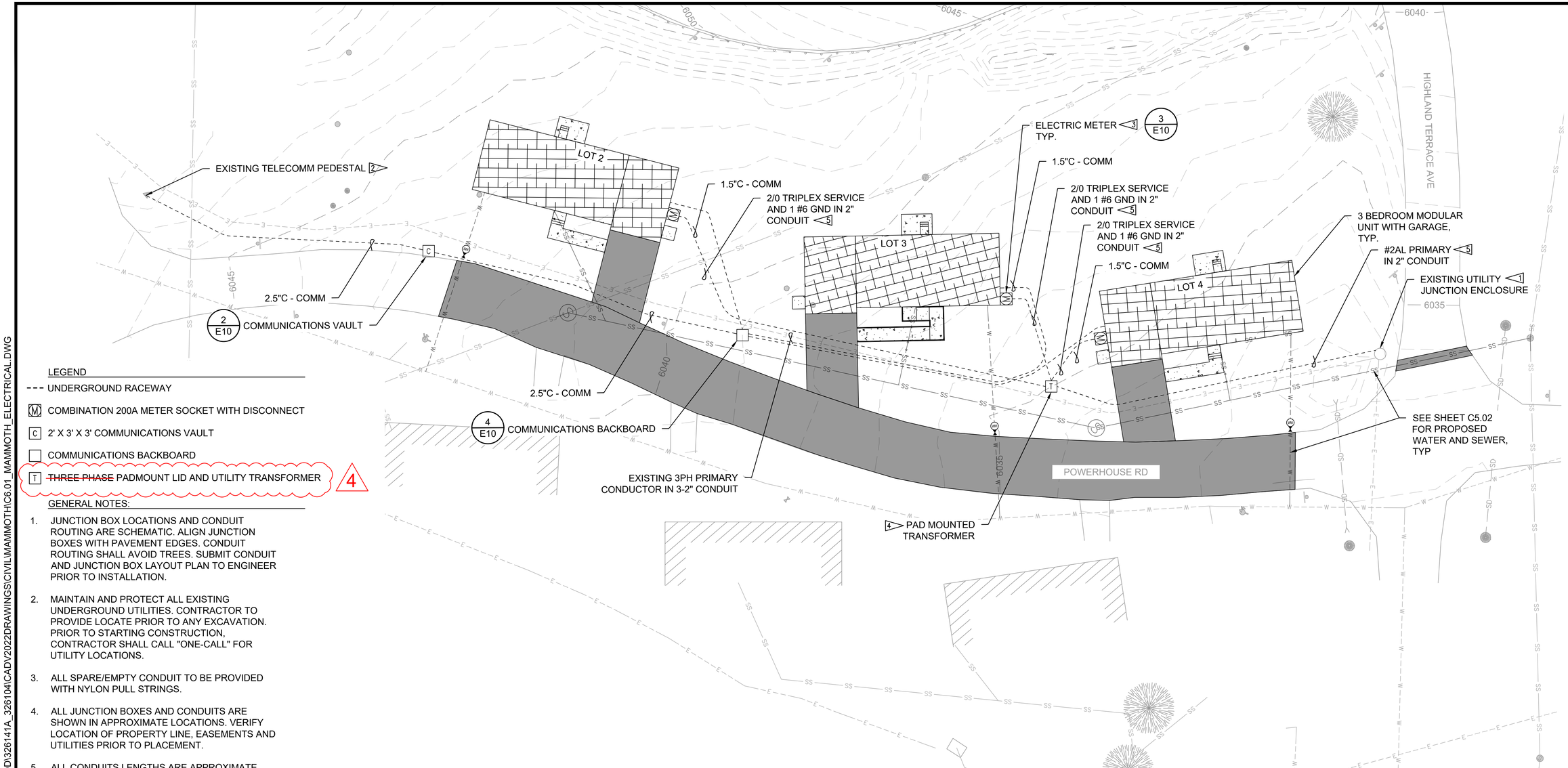

LEGEND

- UNDERGROUND RACEWAY
- M COMBINATION 200A METER SOCKET WITH DISCONNECT
- C 2' X 3' X 3' COMMUNICATIONS VAULT
- COMMUNICATIONS BACKBOARD
- T ~~THREE PHASE~~ PADMOUNT LID AND UTILITY TRANSFORMER 4

GENERAL NOTES:

1. JUNCTION BOX LOCATIONS AND CONDUIT ROUTING ARE SCHEMATIC. ALIGN JUNCTION BOXES WITH PAVEMENT EDGES. CONDUIT ROUTING SHALL AVOID TREES. SUBMIT CONDUIT AND JUNCTION BOX LAYOUT PLAN TO ENGINEER PRIOR TO INSTALLATION.
2. MAINTAIN AND PROTECT ALL EXISTING UNDERGROUND UTILITIES. CONTRACTOR TO PROVIDE LOCATE PRIOR TO ANY EXCAVATION. PRIOR TO STARTING CONSTRUCTION, CONTRACTOR SHALL CALL "ONE-CALL" FOR UTILITY LOCATIONS.
3. ALL SPARE/EMPTY CONDUIT TO BE PROVIDED WITH NYLON PULL STRINGS.
4. ALL JUNCTION BOXES AND CONDUITS ARE SHOWN IN APPROXIMATE LOCATIONS. VERIFY LOCATION OF PROPERTY LINE, EASEMENTS AND UTILITIES PRIOR TO PLACEMENT.
5. ALL CONDUITS LENGTHS ARE APPROXIMATE.
6. GROUND ALL IN-GROUND JUNCTION BOXES, HAND HOLES, AND PULL BOXES.
7. ELECTRICAL WORK SHALL COMPLY WITH NEC 2026.

KEY NOTES:

1. INTERCEPT EXISTING UTILITY JUNCTION ENCLOSURE. COORDINATE WITH NORTHWESTERN ENERGY.
2. INTERCEPT EXISTING TELECOMM PEDESTAL. COORDINATE WITH SERVICE PROVIDER.
3. PROVIDE METER BASE AND TELECOMM BOX AT EACH MODULAR UNIT PER UTILITY REQUIREMENTS. COORDINATE WITH SERVING UTILITY. REFER TO DETAIL 3 ON SHEET E4.
4. UTILITY PROVIDED PAD MOUNT LID AND TRANSFORMER. COORDINATE WITH NORTHWESTERN ENERGY.
5. UTILITY PROVIDED CONDUIT AND CONDUCTORS. COORDINATE WITH NORTHWESTERN ENERGY.

20 0 20 40
SCALE OF FEET

Professional Engineer TIMOTHY L. JANDT 8320 Date WYOMING

A/E FIRM PRIME: STANTEC CHEYENNE, WY	DESIGNED: JC CADD: BB/PS/AS TECH. REVIEW: JC DATE: 08/18/2026	SUB SHEET NO. E2	TITLE OF SHEET MAMMOTH ELECTRICAL AND TELECOM SITE PLAN 2 OF 2 YELLOWSTONE NATIONAL PARK	DRAWING NO. 101 198433 PMIS / PKG NO. 326141 SHEET 42 OF 94

PLOT DATE: 9/11/2026 2:46 PM USER: SOUTHWORTH, PAUL
C:\USERS\PSOUTHWORTH\STANTEC\CRONIN, MEGHAN - NPS\YELL\DD\326141A_326104\CADV2022DRAWINGS\CIVIL\MAMMOTHC6.01_MAMMOTH_ELECTRICAL.DWG

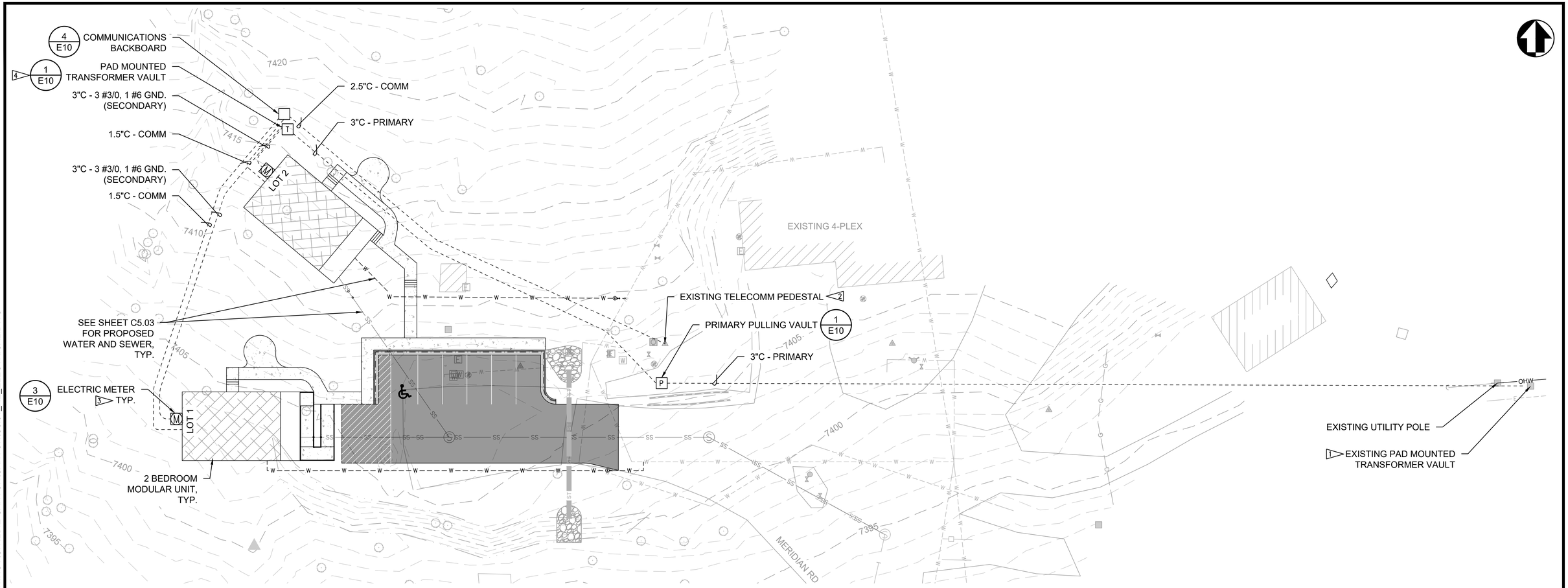

LEGEND

- UNDERGROUND RACEWAY
- [M] COMBINATION 200A METER SOCKET WITH DISCONNECT
- [ ] COMMUNICATIONS BACKBOARD
- [T] ~~THREE PHASE~~ PRIMARY VAULT WITH PAD MOUNTED TRANSFORMER LID
- [P] PRIMARY PULLING VAULT

GENERAL NOTES:

1. JUNCTION BOX LOCATIONS AND CONDUIT ROUTING ARE SCHEMATIC. ALIGN JUNCTION BOXES WITH PAVEMENT EDGES. CONDUIT ROUTING SHALL AVOID TREES. SUBMIT CONDUIT AND JUNCTION BOX LAYOUT PLAN TO ENGINEER PRIOR TO INSTALLATION.
2. MAINTAIN AND PROTECT ALL EXISTING UNDERGROUND UTILITIES. CONTRACTOR TO PROVIDE LOCATE PRIOR TO ANY EXCAVATION. PRIOR TO STARTING CONSTRUCTION, CONTRACTOR SHALL CALL "ONE-CALL" FOR UTILITY LOCATIONS.
3. ALL SPARE/EMPTY CONDUIT TO BE PROVIDED WITH NYLON PULL STRINGS.
4. ALL JUNCTION BOXES AND CONDUITS ARE SHOWN IN APPROXIMATE LOCATIONS. VERIFY LOCATION OF PROPERTY LINE, EASEMENTS AND UTILITIES PRIOR TO PLACEMENT.
5. ALL CONDUITS LENGTHS ARE APPROXIMATE.
6. GROUND ALL IN-GROUND JUNCTION BOXES, HAND HOLES, AND PULL BOXES.
7. ELECTRICAL WORK SHALL COMPLY WITH NEC 2026.

KEY NOTES:

1. INTERCEPT EXISTING PAD MOUNTED TRANSFORMER VAULT. PROVIDE RIGID STEEL SWEEP AND RISER 10' UP POLE. COORDINATE WITH FLATHEAD ELECTRIC.
2. INTERCEPT EXISTING TELECOMM PEDESTAL. COORDINATE WITH SERVICE PROVIDER.
3. PROVIDE METER BASE AND TELECOMM BOX AT EACH MODULAR UNIT PER UTILITY REQUIREMENTS. COORDINATE WITH SERVING UTILITY. REFER TO DETAIL 3 ON SHEET E8.
4. PROVIDE ~~THREE PHASE~~ PRIMARY VAULT WITH PAD MOUNT TRANSFORMER LID PER UTILITY REQUIREMENTS. COORDINATE WITH FLATHEAD ELECTRIC.

20 0 20 40
SCALE OF FEET

MONTANA 9/11/26 TIMOTHY J. JANOF 14037PE LICENSED PROFESSIONAL ENGINEER

A/E FIRM PRIME: STANTEC CHEYENNE, WY	DESIGNED: JC CADD: AS TECH. REVIEW: JC DATE: 08/18/2026	SUB SHEET NO. E3	TITLE OF SHEET NE ENTRANCE ELECTRICAL SITE PLAN YELLOWSTONE NATIONAL PARK

DRAWING NO. 101 198433
PMIS / PKG NO. 326141
SHEET 43 OF 94

PLOT DATE: 9/11/2026 3:17 PM USER: SOUTHWORTH, PAUL
C:\USERS\PSOUTHWORTH\STANTEC\CRONIN, MEGHAN - NPS\YELLDD\326141A_326104\CADV2022\DRAWINGS\CIVIL\NE-CANYON\C6.01_NE_ELECTRICAL.DWG

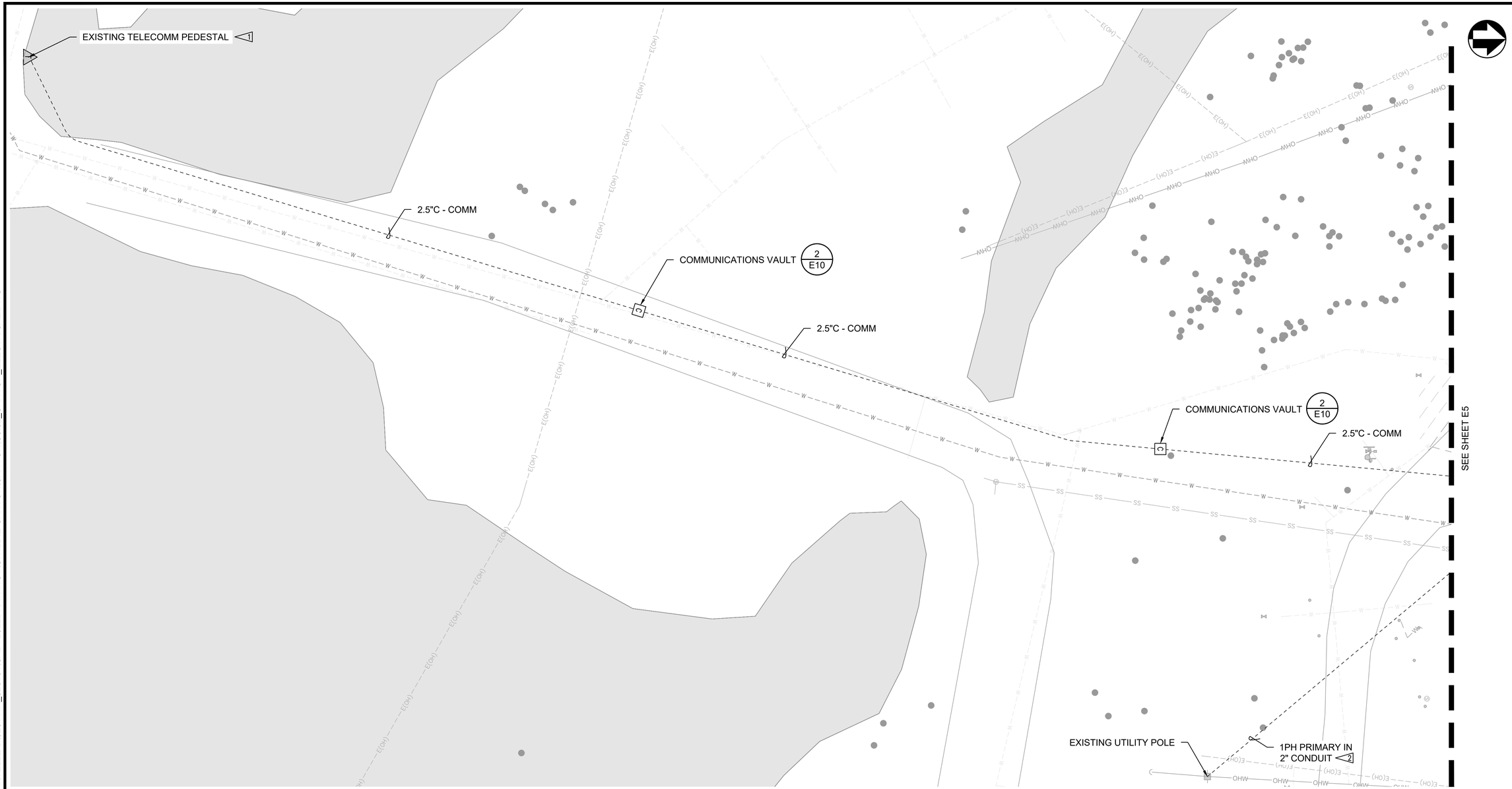

LEGEND

- UNDERGROUND RACEWAY
- (M) COMBINATION 200A METER SOCKET WITH DISCONNECT
- C 2' X 3' X 3' COMMUNICATIONS VAULT
- COMMUNICATIONS BACKBOARD
- T ~~THREE PHASE~~ PADMOUNT LID AND UTILITY TRANSFORMER 4

KEY NOTES:

1. INTERCEPT EXISTING TELECOMM PEDESTAL. COORDINATE WITH SERVICE PROVIDER.
2. UTILITY PROVIDED CONDUIT AND CONDUCTORS. COORDINATE WITH NORTHWESTERN ENERGY.

GENERAL NOTES:

1. JUNCTION BOX LOCATIONS AND CONDUIT ROUTING ARE SCHEMATIC. ALIGN JUNCTION BOXES WITH PAVEMENT EDGES. CONDUIT ROUTING SHALL AVOID TREES. SUBMIT CONDUIT AND JUNCTION BOX LAYOUT PLAN TO ENGINEER PRIOR TO INSTALLATION.
2. MAINTAIN AND PROTECT ALL EXISTING UNDERGROUND UTILITIES. CONTRACTOR TO PROVIDE LOCATE PRIOR TO ANY EXCAVATION. PRIOR TO STARTING CONSTRUCTION, CONTRACTOR SHALL CALL "ONE-CALL" FOR UTILITY LOCATIONS.
3. ALL SPARE/EMPTY CONDUIT TO BE PROVIDED WITH NYLON PULL STRINGS.
4. ALL JUNCTION BOXES AND CONDUITS ARE SHOWN IN APPROXIMATE LOCATIONS. VERIFY LOCATION OF PROPERTY LINE, EASEMENTS AND UTILITIES PRIOR TO PLACEMENT.
5. ALL CONDUITS LENGTHS ARE APPROXIMATE.
6. GROUND ALL IN-GROUND JUNCTION BOXES, HAND HOLES, AND PULL BOXES.
7. ELECTRICAL WORK SHALL COMPLY WITH NEC 2026.

20 0 20 40
SCALE OF FEET

Professional Engineer
TIMOTHY L. JANDT
8320
WYOMING
Date 9/11/26

A/E FIRM PRIME: STANTEC CHEYENNE, WY	DESIGNED: JC CADD: AS TECH. REVIEW: JC DATE: 08/18/2026	SUB SHEET NO. E4	TITLE OF SHEET CANYON VILLAGE ELECTRICAL SITE PLAN SHEET 1 OF 3 YELLOWSTONE NATIONAL PARK	DRAWING NO. 101 198433 PMIS / PKG NO. 326141 SHEET 44 OF 94

PLOT DATE: 9/11/2026 3:18 PM USER: SOUTHWORTH, PAUL
C:\USERS\PSOUTHWORTH\STANTEC\CRONIN, MEGHAN - NPS\YELL\DD\326141A_326104\CADV2022DRAWINGS\CIVIL\NE-CANYON\CANYON\C6.02_CANYON_ELECTRICAL.DWG

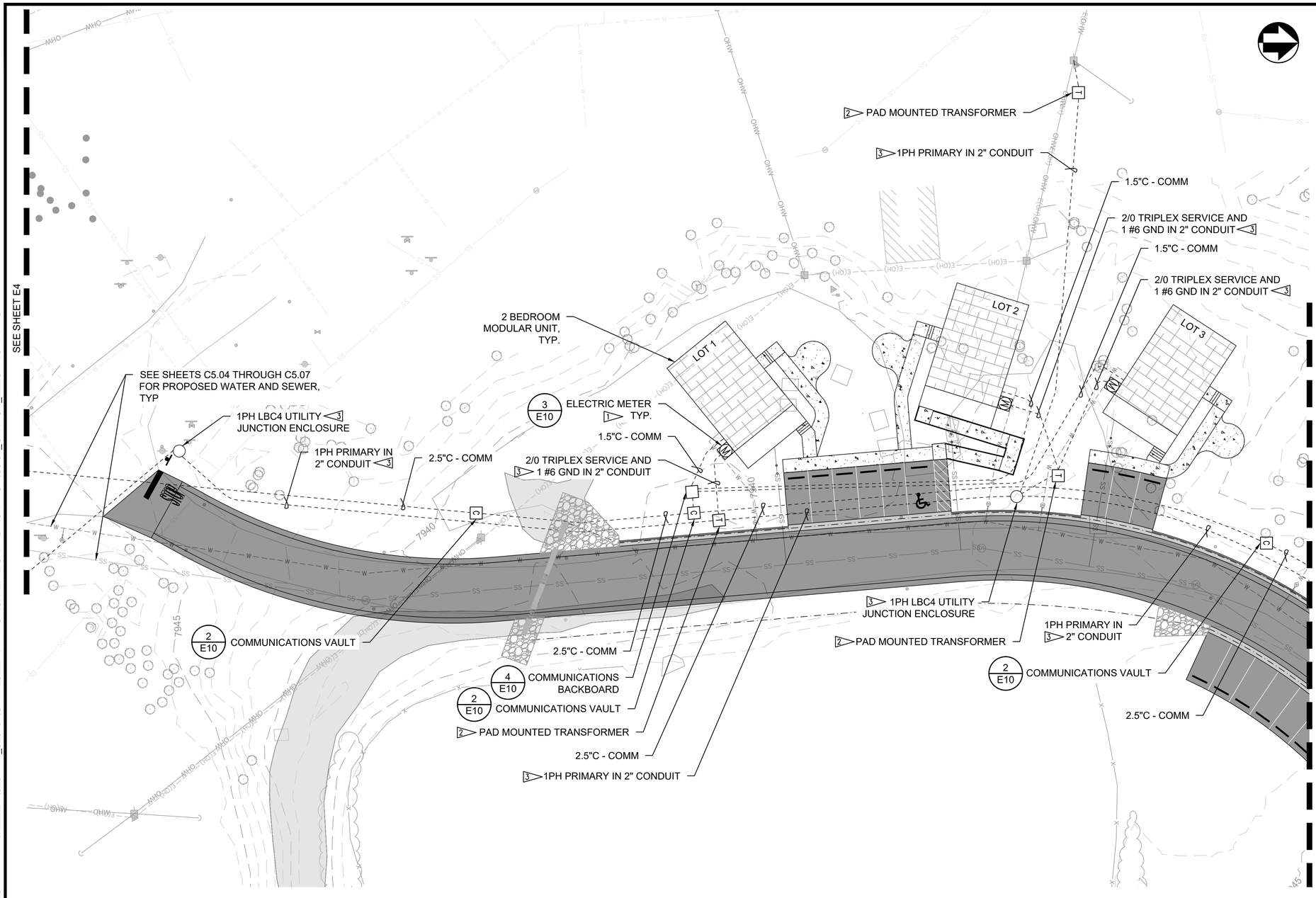

LEGEND

- UNDERGROUND RACEWAY
- (M) COMBINATION 200A METER SOCKET WITH DISCONNECT
- (C) 2' X 3' X 3' COMMUNICATIONS VAULT
- COMMUNICATIONS BACKBOARD
- (T) ~~THREE PHASE~~ PADMOUNT LID AND UTILITY TRANSFORMER 4
- UTILITY JUNCTION ENCLOSURE

GENERAL NOTES:

1. JUNCTION BOX LOCATIONS AND CONDUIT ROUTING ARE SCHEMATIC. ALIGN JUNCTION BOXES WITH PAVEMENT EDGES. CONDUIT ROUTING SHALL AVOID TREES. SUBMIT CONDUIT AND JUNCTION BOX LAYOUT PLAN TO ENGINEER PRIOR TO INSTALLATION.
2. MAINTAIN AND PROTECT ALL EXISTING UNDERGROUND UTILITIES. CONTRACTOR TO PROVIDE LOCATE PRIOR TO ANY EXCAVATION. PRIOR TO STARTING CONSTRUCTION, CONTRACTOR SHALL CALL "ONE-CALL" FOR UTILITY LOCATIONS.
3. ALL SPARE/EMPTY CONDUIT TO BE PROVIDED WITH NYLON PULL STRINGS.
4. ALL JUNCTION BOXES AND CONDUITS ARE SHOWN IN APPROXIMATE LOCATIONS. VERIFY LOCATION OF PROPERTY LINE, EASEMENTS AND UTILITIES PRIOR TO PLACEMENT.
5. ALL CONDUITS LENGTHS ARE APPROXIMATE.
6. GROUND ALL IN-GROUND JUNCTION BOXES, HAND HOLES, AND PULL BOXES.
7. ELECTRICAL WORK SHALL COMPLY WITH NEC 2026.

KEY NOTES:

1. PROVIDE METER BASE AND TELCOMM BOX AT EACH MODULAR UNIT PER UTILITY REQUIREMENTS. COORDINATE WITH SERVING UTILITY. REFER TO DETAIL 3 ON SHEET E9.
2. UTILITY PROVIDED PAD MOUNT LID AND TRANSFORMER. COORDINATE WITH NORTHWESTERN ENERGY.
3. UTILITY PROVIDED CONDUIT AND CONDUCTORS. COORDINATE WITH NORTHWESTERN ENERGY.

20 0 20 40
SCALE OF FEET

Professional Engineer TIMOTHY L. JANDT 8320 Date 9/11/26 WYOMING

A/E FIRM PRIME: STANTEC CHEYENNE, WY	DESIGNED: JC CADD: AS TECH. REVIEW: JC DATE: 08/18/2026	SUB SHEET NO. E5	TITLE OF SHEET CANYON VILLAGE ELECTRICAL SITE PLAN SHEET 2 OF 3 YELLOWSTONE NATIONAL PARK	DRAWING NO. 101 198433 PMIS / PKG NO. 326141 SHEET 45 OF 94

PLOT DATE: 9/11/2026 3:18 PM USER: SOUTHWORTH, PAUL
C:\USERS\PSOUTHWORTH\STANTEC\CRONIN, MEGHAN - NPS\YELLDD\326141A_326104\CADV2022DRAWINGS\CIVILINE-CANYON\CANYON\C6.02_CANYON_ELECTRICAL.DWG

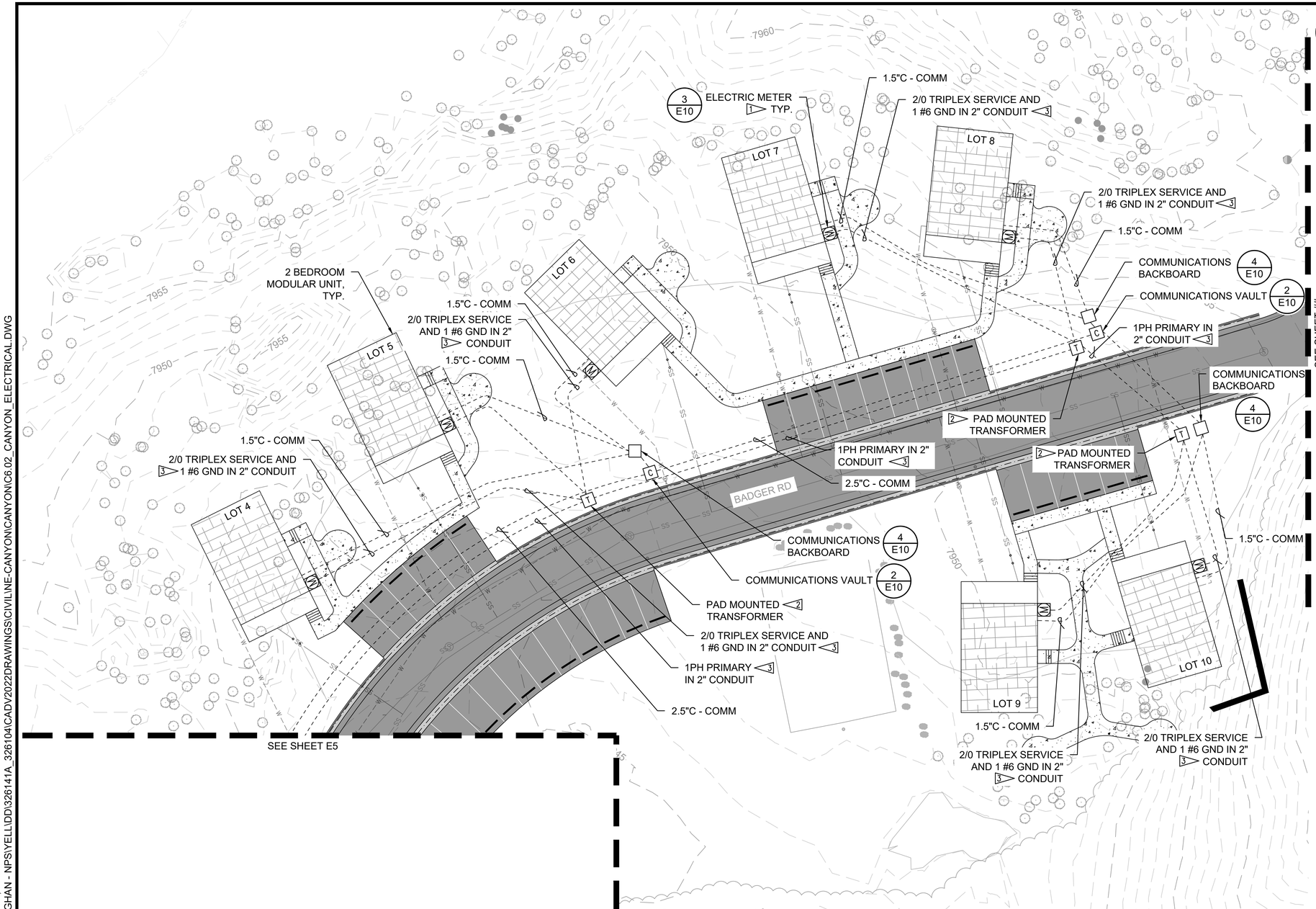

LEGEND

- UNDERGROUND RACEWAY
- (M) COMBINATION 200A METER SOCKET WITH DISCONNECT
- (C) 2' X 3' X 3' COMMUNICATIONS VAULT
- COMMUNICATIONS BACKBOARD
- (T) ~~THREE PHASE~~ PADMOUNT LID AND UTILITY TRANSFORMER 4
- UTILITY JUNCTION ENCLOSURE

GENERAL NOTES:

1. JUNCTION BOX LOCATIONS AND CONDUIT ROUTING ARE SCHEMATIC. ALIGN JUNCTION BOXES WITH PAVEMENT EDGES. CONDUIT ROUTING SHALL AVOID TREES. SUBMIT CONDUIT AND JUNCTION BOX LAYOUT PLAN TO ENGINEER PRIOR TO INSTALLATION.
2. MAINTAIN AND PROTECT ALL EXISTING UNDERGROUND UTILITIES. CONTRACTOR TO PROVIDE LOCATE PRIOR TO ANY EXCAVATION. PRIOR TO STARTING CONSTRUCTION, CONTRACTOR SHALL CALL "ONE-CALL" FOR UTILITY LOCATIONS.
3. ALL SPARE/EMPTY CONDUIT TO BE PROVIDED WITH NYLON PULL STRINGS.
4. ALL JUNCTION BOXES AND CONDUITS ARE SHOWN IN APPROXIMATE LOCATIONS. VERIFY LOCATION OF PROPERTY LINE, EASEMENTS AND UTILITIES PRIOR TO PLACEMENT.
5. ALL CONDUITS LENGTHS ARE APPROXIMATE.
6. GROUND ALL IN-GROUND JUNCTION BOXES, HAND HOLES, AND PULL BOXES.
7. ELECTRICAL WORK SHALL COMPLY WITH NEC 2026.

KEY NOTES:

1. PROVIDE METER BASE AND TELCOMM BOX AT EACH MODULAR UNIT PER UTILITY REQUIREMENTS. COORDINATE WITH SERVING UTILITY. REFER TO DETAIL 3 ON SHEET E9.
2. UTILITY PROVIDED PAD MOUNT LID AND TRANSFORMER. COORDINATE WITH NORTHWESTERN ENERGY.
3. UTILITY PROVIDED CONDUIT AND CONDUCTORS. COORDINATE WITH NORTHWESTERN ENERGY.

20 0 20 40
SCALE OF FEET

Professional Engineer TIMOTHY L. JANOS 8320 WYOMING

A/E FIRM PRIME: STANTEC CHEYENNE, WY	DESIGNED: JC CADD: AS TECH. REVIEW: JC DATE: 08/18/2026	SUB SHEET NO. E6	TITLE OF SHEET CANYON VILLAGE ELECTRICAL SITE PLAN SHEET 3 OF 3 YELLOWSTONE NATIONAL PARK	DRAWING NO. 101 198433 PMIS / PKG NO. 326141 SHEET 46 OF 94

PLOT DATE: 9/11/2026 3:18 PM USER: SOUTHWORTH, PAUL
C:\USERS\PSOUTHWORTH\STANTEC\CRONIN, MEGHAN - NPS\YELL\DD\326141A_326104\CADV2022DRAWINGS\CIVIL\NE-CANYON\CANYON_ELECTRICAL.DWG

LEGEND
GROUND
METER
UTILITY TRANSFORMER

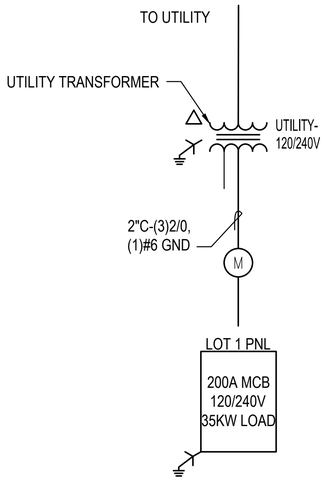

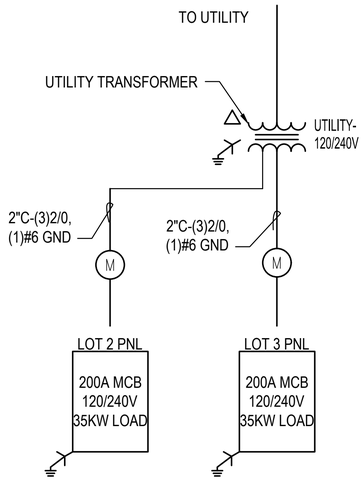

ELECTRICAL LOAD DETAILS, PER LOT - (LOTS 1-10)

4

IF ELECTRIC:	# UNITS	LOAD	
BASEBOARD HEAT	1	10	KW
DRYER	1	5	KW
WATER TANK	1	5	KW
RANGE	1	4	KW
SUMP	1	1	KW
GENERAL LIGHTS	1	2	KW
GENERAL RECEPTACLES	1	3	KW
GENERAL APPLIANCES	1	5	KW
TOTAL CONNECTED LOAD		35	KW

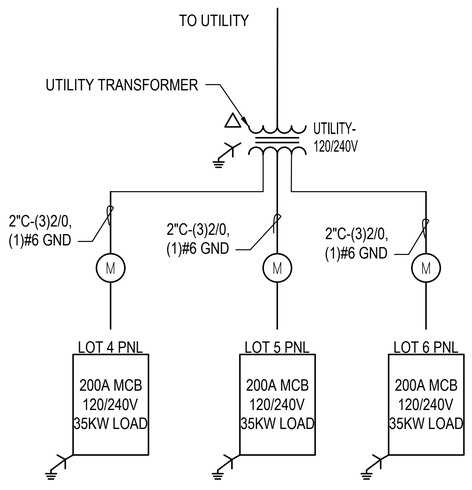

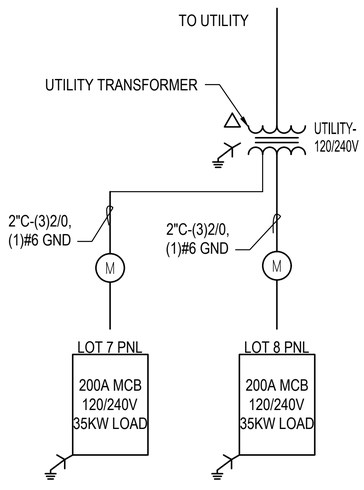

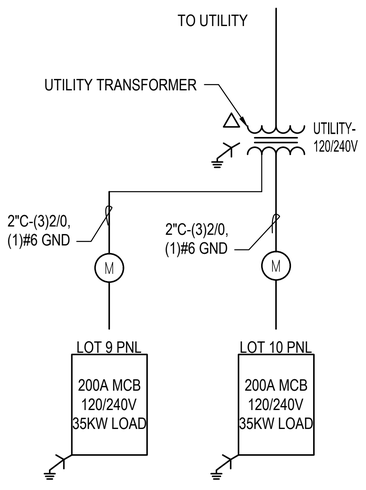

Professional Engineer
TIMOTHY L. JANDT
8320
WYOMING
Date 9/11/26

A/E FIRM	DESIGNED:	SUB SHEET NO.	TITLE OF SHEET	DRAWING NO.
PRIME: STANTEC CHEYENNE, WY	JC	E9	CANYON VILLAGE ELECTRICAL ONE LINE DIAGRAM	101 198433
	CADD: AS			PMIS / PKG NO. 326141
	TECH. REVIEW: JC		YELLOWSTONE NATIONAL PARK	SHEET 49 OF 94
	DATE: 08/18/2026			

PLOT DATE: 9/11/2026 3:19 PM USER: SOUTHWORTH, PAUL
C:\USERS\PSOUTHWORTH\STANTEC\CRONIN, MEGHAN - NPS\YELL\DD\326141A_326104\CADV2022DRAWINGS\CIVIL\NE-CANYONICANYONIE4_ELECTRICAL_ONE LINES.DWG

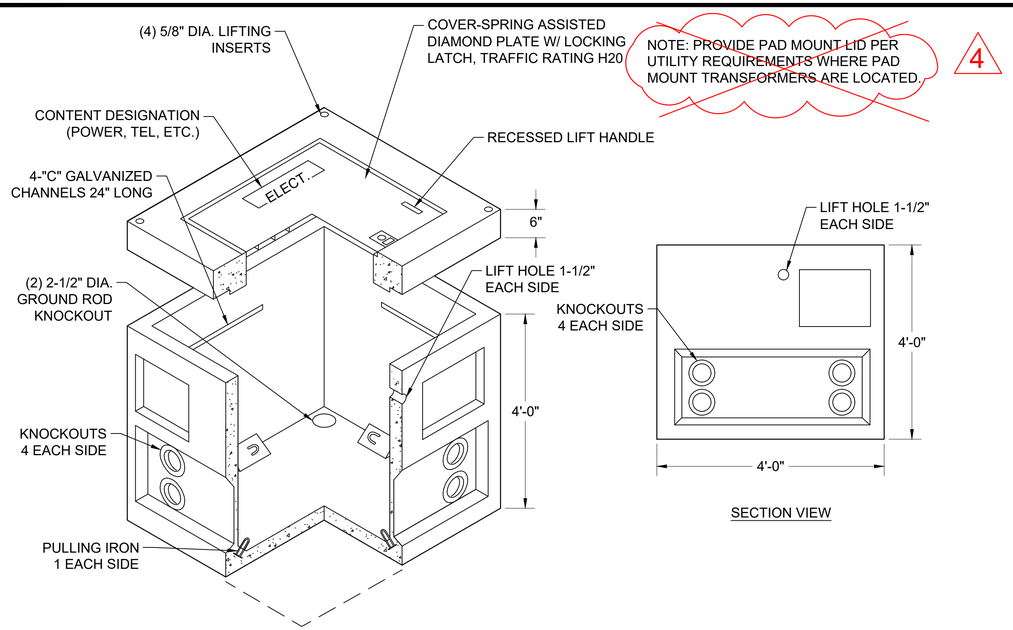

1 E10 PRIMARY PULLING/PAD MOUNT TRANSFORMER VAULT
NOT TO SCALE

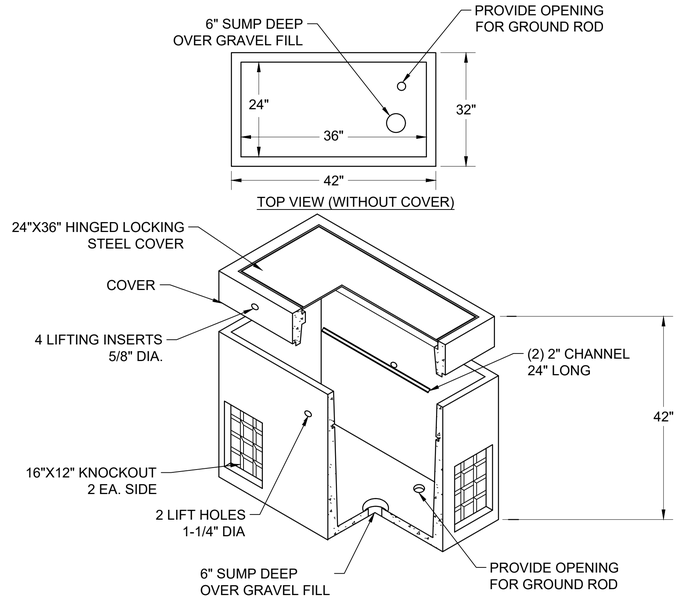

2 E10 COMMUNICATIONS VAULT
NOT TO SCALE

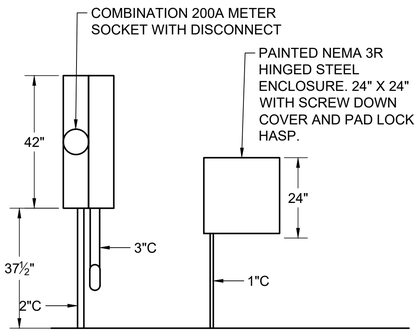

3 E10 POWER METER AND TELECOM BOX
NOT TO SCALE

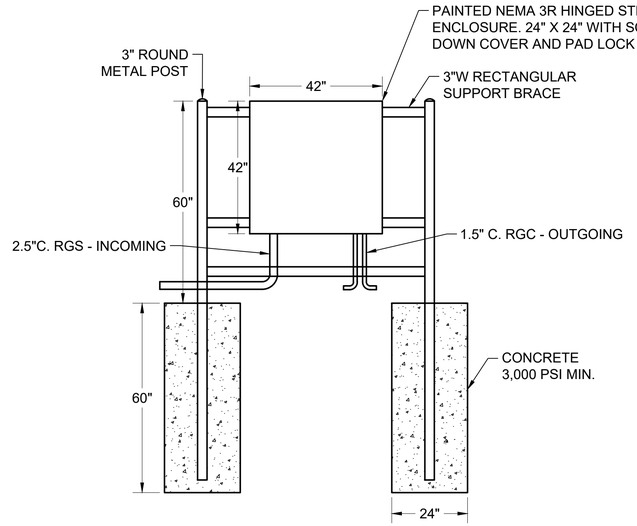

4 E10 COMMUNICATIONS BACKBOARD
NOT TO SCALE

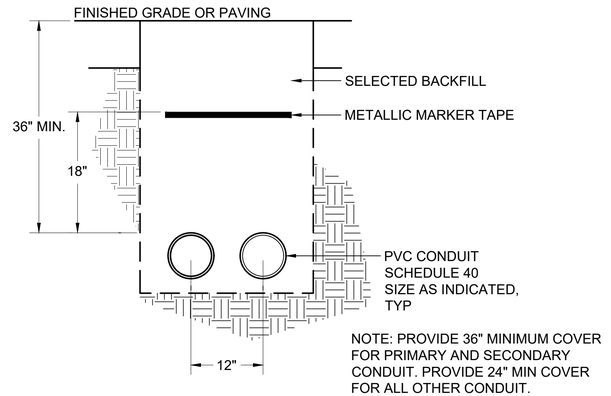

5 E10 DRY UTILITY TRENCH
NOT TO SCALE

MONTANA 9/11/26 TIMOTHY L. JANOF 14037PE LICENSED PROFESSIONAL ENGINEER

Professional Engineer TIMOTHY L. JANOF 8320 WYOMING Date 9/11/26

A/E FIRM PRIME: STANTEC CHEYENNE, WY	DESIGNED: JC CADD: AS TECH. REVIEW: JC DATE: 08/18/2026	SUB SHEET NO. E10	TITLE OF SHEET ELECTRICAL AND TELECOM DETAILS YELLOWSTONE NATIONAL PARK	DRAWING NO. 101 198433 PMIS / PKG NO. 326141 SHEET 50 OF 94

PLOT DATE: 9/11/2026 3:19 PM USER: SOUTHWORTH, PAUL
C:\USERS\PSOUTHWORTH\STANTEC\CRONIN, MEGHAN - NPS\YELL\DD\326141A_326104\CADV2022DRAWINGS\CIVIL\NE-CANYON\C7.01_DETAILS_1.DWG