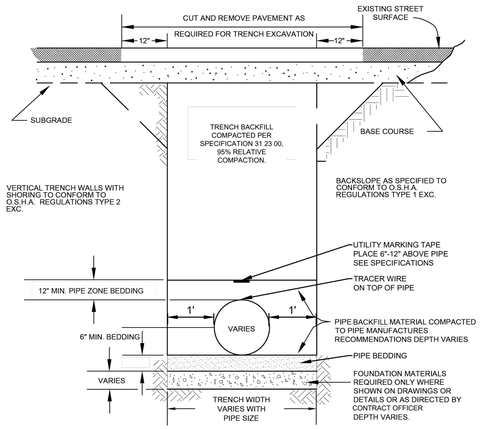

NOTES:

1. PIPE BEDDING CONSISTENT WITH SECTION 704.01 OF FP-24.
2. PIPE ZONE BACKFILL (UP TO 12" OVER PIPE) IS CONSISTENT WITH PIPE BEDDING MATERIAL. PIPE ZONE BACKFILL SHALL BE PLACED AND COMPACTED IN 6" LIFTS.

1 UTILITY TRENCH
C7.04 NOT TO SCALE

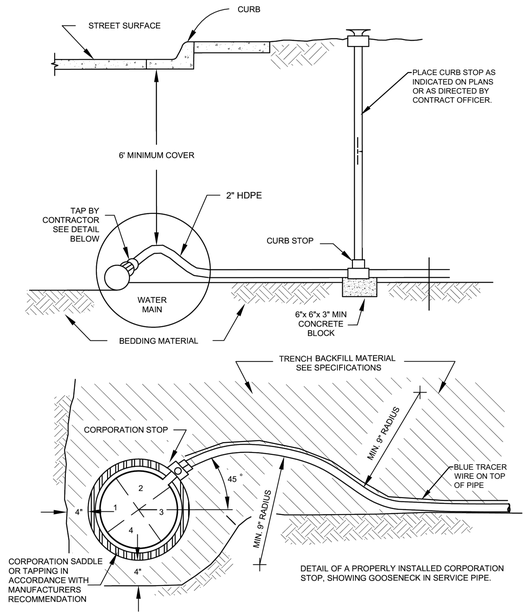

DETAIL OF A PROPERLY INSTALLED CORPORATION STOP, SHOWING GOOSENECK IN SERVICE PIPE.

2 WATER SERVICE LINE
C7.04 NOT TO SCALE

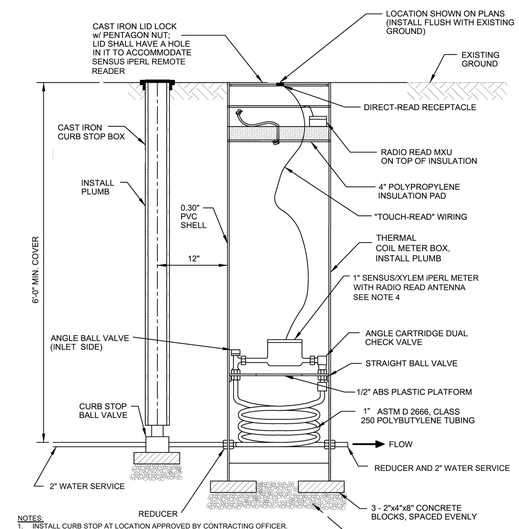

NOTES:

1. INSTALL CURB STOP AT LOCATION APPROVED BY CONTRACTING OFFICER.
2. CURB STOP BOX TO INCLUDE STATIONARY ROD (STAINLESS STEEL) AND PIN; CONTRACTOR SHALL VERIFY LENGTH.
3. INSIDE NUT SHALL BE HELD WITH A WRENCH WHEN CONNECTION SERVICE LINES.
4. WATER METERS SHALL BE COMPATIBLE WITH THE PARK'S EXISTING FLEXNET RADIO READ SYSTEM AND SOFTWARE.
5. THE CONTRACTOR SHALL INSTALL PRESSURE REDUCING VALVES (PRVs) ON ANY SERVICES EXCEEDING 80 PSI OR AS DIRECTED BY THE CONTRACTING OFFICER.
6. THE CONTRACTOR WILL PROVIDE ENOUGH PRVS TO INSTALL ONE ON EACH NEW SERVICE. AT THE TIME OF INSTALLATION AND IN THE PRESENCE OF THE CONTRACTING OFFICER, THE CONTRACTOR WILL COMPLETE PRESSURE TESTING AT EACH NEW SERVICE LOCATION TO CONFIRM WHETHER A PRV IS NEEDED AT THAT LOCATION. ANY UNINSTALLED PRVs WILL BE GIVEN TO THE CONTRACTING OFFICER AS SPARES.

NOT TO SCALE

3 WATER METER
C7.04 NOT TO SCALE

NOTES:

1. ALL BOLTS, NUTS & WASHERS ARE TO BE SERIES 300 STAINLESS STEEL.
2. ON GRAVELLED OR DIRT ROADS, OR WHERE REQUIRED AS A CORRECTIVE MEASURE, TOP OF VALVE BOX SHALL BE PLACED 4" - 6" BELOW FINISHED GRADE.
3. ALL VALVES ARE TO BE RESTRAINED TO PIPE. A FOSTER ADAPTOR SHALL BE USED TO RESTRAIN VALVES &/OR FITTINGS IN LOCATIONS WHERE CLOSE-COUPLED MECHANICAL JOINT CONNECTIONS ARE REQUIRED.
4. CONCRETE SUPPORT BLOCKS MAY BE PRE-CAST OR POURED IN PLACE. SUPPORT BLOCKS SHALL BE CONSTRUCTED OF 4000 PSI CONCRETE (MIN.). FOR VALVES 12" AND SMALLER, SUPPORT BLOCKS SHALL BE 18" X 18" X 6" IN SIZE. FOR VALVES LARGER THAN 12", SUPPORT BLOCK DIMENSIONS SHALL BE DETERMINED BY THE CONTRACT OFFICER.
5. IF CONCRETE SUPPORT BLOCKS ARE POURED IN PLACE, THEY SHALL BE FORMED. USE POLYETHYLENE TO SEPARATE FITTING FROM THE CONCRETE.
6. VALVE BOX ALIGNMENT TOOL SHALL BE USED TO CHECK CENTERING OF VALVE NUT AND BOX BEING PLUMB PRIOR TO ANY INSTALLATION OF PAVEMENT SURFACING.

4 WATER LINE VALVE AND BOX
C7.04 NOT TO SCALE

NOTES:

1. ALL BOLTS, NUTS & WASHERS ARE TO BE SERIES 300 STAINLESS STEEL.
2. BEGIN TRACER WIRE BY WRAPPING AROUND EXISTING WATER LINE.
3. ON GRAVELLED OR DIRT ROADS, OR WHERE REQUIRED AS A CORRECTIVE MEASURE, TOP OF VALVE BOX SHALL BE PLACED 4"-6" BELOW FINISHED GRADE.
4. ALL VALVES ARE TO BE RESTRAINED TO PIPE. A FOSTER ADAPTOR SHALL BE USED TO RESTRAIN VALVES &/OR FITTINGS IN LOCATIONS WHERE CLOSE-COUPLED MECHANICAL JOINT CONNECTIONS ARE REQUIRED.
5. CONCRETE SUPPORT BLOCKS MAY BE PRE-CAST OR POURED IN PLACE. SUPPORT BLOCKS SHALL BE CONSTRUCTED OF 4000 PSI CONCRETE (MIN.). FOR VALVES 12" AND SMALLER, SUPPORT BLOCKS SHALL BE 18" X 18" X 6" IN SIZE. FOR VALVES LARGER THAN 12", SUPPORT BLOCK DIMENSIONS SHALL BE DETERMINED BY THE CONTRACT OFFICER.
6. IF CONCRETE SUPPORT BLOCKS ARE POURED IN PLACE, THEY SHALL BE FORMED; USE POLYETHYLENE TO SEPARATE FITTING FROM THE CONCRETE.
7. VALVE BOX ALIGNMENT TOOL WILL BE USED TO CHECK THAT THE VALVE OPERATING NUT IS CENTERED WITHIN VALVE BOX AND THAT THE VALVE BOX IS PLUMB PRIOR TO ANY INSTALLATION OF PAVEMENT SURFACING.

5 TAPPING SLEEVE & VALVE CONNECTION TO EX WATER LINE
C7.04 NOT TO SCALE

PARALLEL ARRANGEMENT

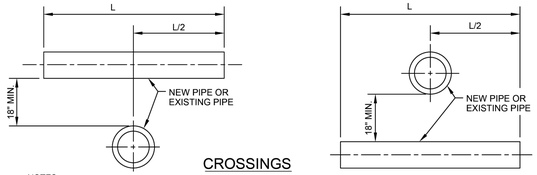

CROSSINGS

NOTES

1. NO EXCEPTION TO THE MINIMUM HORIZONTAL OR VERTICAL SEPARATION REQUIREMENTS ARE PERMITTED WHEN THE SEWAGE-CARRYING PIPE IS A FORCE MAIN. SERVICE LINES MAY DEVIATE FROM THE 10' REQUIREMENT IF APPROVED BY CONTRACTING OFFICER.
2. AT CROSSINGS, ONE FULL LENGTH OF WATER LINE PIPE SHALL BE LOCATED SO THAT BOTH JOINTS WILL BE AS FAR FROM THE SEWER LINE AS POSSIBLE.
3. "L" IS A STANDARD LENGTH OF PIPE AS SUPPLIED BY A PIPE MANUFACTURER.
4. WHERE THE 10-FOOT HORIZONTAL SEPARATION CANNOT BE MAINTAINED, THIS SEPARATION MAY BE REDUCED, PROVIDED THE BOTTOM OF THE WATER LINE IS AT LEAST 18 INCHES HIGHER THAN THE TOP OF THE SEWER LINE AND THE FOLLOWING ADDITIONAL REQUIREMENTS ARE MET IN ACCORDANCE WITH WPWSS:
   A. THE SANITARY SEWER OR STORM DRAIN SHALL BE CONSTRUCTED OF MATERIALS AND WITH JOINTS THAT ARE EQUIVALENT TO WATER MAIN STANDARDS OF CONSTRUCTION AND SHALL BE TESTED FOR WATER TIGHTNESS BY SEWER LINE METHODS PER SPECIFICATION 33 00 00, OR THE SANITARY SEWER, STORM SEWER, OR WATER MAIN SHALL BE PLACED IN A SEPARATE CASING PIPE. IN EITHER METHOD, THE LENGTH OF SEWER LINE OR CASING PIPE SHALL EXTEND A MINIMUM OF 9-FEET ON EACH SIDE OF THE CROSSING, AND;
   B. WATER MAINS PASSING UNDER SEWER LINES SHALL, IN ADDITION TO THE ABOVE REQUIREMENTS, BE PROTECTED BY PROVIDING ADEQUATE STRUCTURAL SUPPORT FOR THE SEWER LINE. SOIL STRUCTURAL SUPPORT SHALL CONSIST OF CEMENT TREATED BACKFILL (FLOWABLE FILL) BEARING ON UNDISTURBED SOIL.
5. WHEN THE REQUIRED HORIZONTAL AND/OR VERTICAL SEPARATIONS BETWEEN WATER LINES AND SEWER LINES CANNOT BE MET, THE SEWER MAY BE ENCASED IN ONE FOOT OF CEMENT TREATED BACKFILL (FLOWABLE FILL).
6. CEMENT TREATED BACKFILL (FLOWABLE FILL) SHALL MEET THE FOLLOWING CRITERIA:

INGREDIENTS	LBS/CY
CEMENT (0.45 SACK)	42
WATER (39 GALLONS)	325
COARSE AGGREGATE (SIZE NO. 57)	1,700
SAND (ASTM C-33)	1,845

   THE MAXIMUM DESIRED 28-DAY STRENGTH SHALL BE 30-60 PSI. THERE IS NO COMPACTION REQUIREMENT FOR CEMENT TREATED BACKFILL.
7. CEMENT-TREATED FILL MATERIALS & INSTALLATION SHALL COMPLY WITH WYOMING DEQ CHAPTER 12 REGULATIONS.

6 WATER AND SEWER LINE SEPARATION
C7.04 NOT TO SCALE

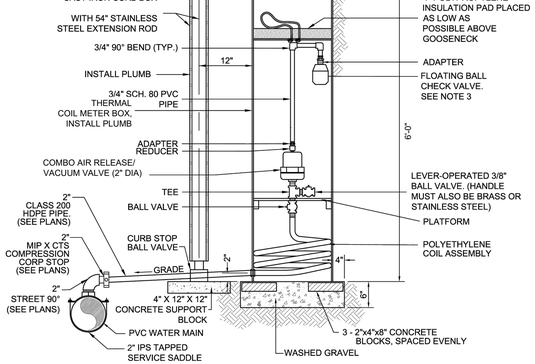

NOTES:

1. ALL FITTINGS MUST BE BRASS OR STAINLESS STEEL UNLESS SPECIFIED OTHERWISE.
2. PROVIDE BACKUP TO NUT IN PIT WHEN CONNECTING FITTING FROM OUTSIDE PIT TO PREVENT KINKING COIL
3. FLOATING BALL CHECK VALVE SHALL BE INFLOW PREVENTER RATED FOR POTABLE SUPPLY PROTECTION WITH BUG SCREEN, VAL-MATIC FLOODSAFE, OR APPROVED EQUAL BY THE CONTRACT OFFICER.
4. PEX TUBING FROM AIR/VAC TO FLOATING BALL CHECK VALVE SHALL BE ANCHORED TO THE SIDE OF THE PIT SO IT STANDS ERECT.
5. FLOATING BALL CHECK VALVE AND GOOSE NECK ASSEMBLY TO BE INSTALLED IF GROUNDWATER IS PRESENT, AS DETERMINED BY CONTRACT OFFICER.
6. INSTALLATION SHALL BE IN NON-TRAFFIC LOADING AREAS ONLY.

7 COMBINATION AIR RELEASE/VACUUM VALVE
C7.04 NOT TO SCALE

A/E FIRM PRIME: STANTEC CHEYENNE, WY	DESIGNED: JC CADD: BB/PS/AS TECH. REVIEW: JC DATE: 06/26/2026	SUB SHEET NO. C7.04	TITLE OF SHEET CIVIL DETAILS SHEET 4 OF 7 YELLOWSTONE NATIONAL PARK	DRAWING NO. 101 198433 PMIS / PKG NO. 326141 SHEET 37 OF 94

PLOT DATE: 7/21/2026 2:46 PM USER: SOUTHWORTH, PAUL
C:\USERS\PSOUTHWORTH\STANTEC\CRONIN, MEGHAN - NPS\YELLDD\326141A_326104\CADV2022\DRAWINGS\CIV\LINE-CANYON\C7.01_DETAILS_1.DWG

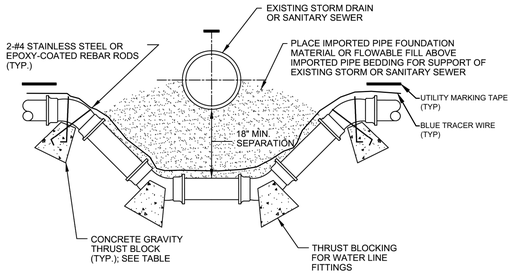

GRAVITY THRUST BLOCK - CY BASED ON 150 PSI MAIN PRESSURE		
PIPE SIZE	45° BEND	22 1/2° BEND
6"	1.0	0.5
8"	1.5	0.6
10"	2.0	0.8
12"	3.0	1.0

NOTE:
1. USE POLYETHYLENE TO SEPARATE FITTINGS FROM THE CONCRETE.
2. THRUST BLOCKS SHALL BE FORMED.

1 C7.05 THRUST BLOCKING FOR WATER LINE FITTINGS
NOT TO SCALE

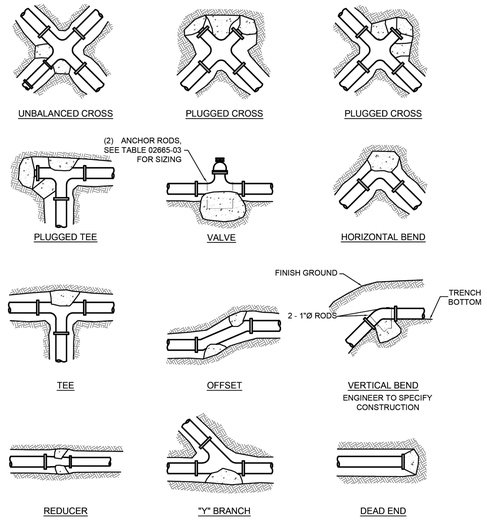

NOTES:
1. SIZE OF BLOCK SHALL BE A MINIMUM OF 6" THICK.
2. ALL BLOCKING SHALL BEAR AGAINST UNDISTURBED MATERIAL.
3. FITTINGS TO BE SEPARATED FROM THRUST BLOCK WITH AN APPROVED BOND BREAKER.

2 C7.05 THRUST BLOCKING
NOT TO SCALE

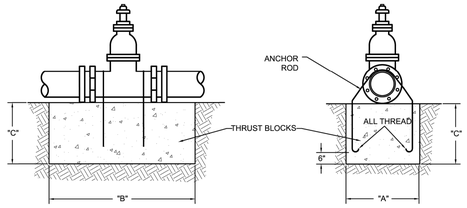

MINIMUM DIMENSIONS FOR THRUST BLOCKING								
ANCHOR ROD SIZE		3/4"	3/4"	3/4"	1"	1 1/8"	1 1/4"	1 3/8"
VALVE SIZE		6" & 8"	10"	12"	14"	16"	18"	24"
100 PSI	"A"	4'–4"	4'–4"	4'–4"	4'–4"	4'–4"	4'–4"	4'–4"
	"B"	4'–0"	4'–0"	4'–0"	4'–0"	4'–0"	4'–0"	4'–0"
	"C"	4'–0"	4'–0"	4'–0"	4'–0"	4'–0"	4'–0"	4'–0"
150 PSI	"A"	6'–5"	6'–5"	6'–5"	6'–5"	6'–5"	6'–5"	6'–5"
	"B"	4'–0"	4'–0"	4'–0"	4'–0"	4'–0"	4'–0"	4'–0"
	"C"	4'–0"	4'–0"	4'–0"	4'–0"	4'–0"	4'–0"	4'–0"
200 PSI	"A"	6'–6"	6'–6"	6'–6"	6'–6"	6'–6"	6'–6"	6'–6"
	"B"	5'–0"	5'–0"	5'–0"	5'–0"	5'–0"	5'–0"	5'–0"
	"C"	5'–0"	5'–0"	5'–0"	5'–0"	5'–0"	5'–0"	5'–0"
250 PSI	"A"	6'–5"	6'–5"	6'–5"	6'–5"	6'–5"	6'–5"	6'–5"
	"B"	6'–0"	6'–0"	6'–0"	6'–0"	6'–0"	6'–0"	6'–0"
	"C"	6'–0"	6'–0"	6'–0"	6'–0"	6'–0"	6'–0"	6'–0"
300 PSI	"A"	7'–8"	7'–8"	7'–8"	7'–8"	7'–8"	7'–8"	7'–8"
	"B"	6'–0"	6'–0"	6'–0"	6'–0"	6'–0"	6'–0"	6'–0"
	"C"	6'–0"	6'–0"	6'–0"	6'–0"	6'–0"	6'–0"	6'–0"

NOTES:
1. PRESSURES SHOWN ABOVE ARE MAXIMUM WORKING PRESSURE IN THE SYSTEM.
2. TO BE INSTALLED AS CALLED FOR AND AT THE LOCATIONS SHOWN ON THE PLANS.
3. COAT EXPOSED PORTIONS OF ANCHOR RODS WITH "KOPPERS" BITUMASTIC NO. 50 COATING OR APPROVED EQUAL.

3 C7.05 MINIMUM THRUST BLOCK DIMENSIONS
NOT TO SCALE

MINIMUM DIMENSIONS FOR THRUST BLOCKING										
FITTING SIZE	TEES & PLUGS		90° BENDS		45° BENDS & WYES		REDUCERS & 22 1/2° BENDS		11 1/4° BENDS	
	A	B	A	B	A	B	A	B	A	B
4"	1'–2"	1'–2"	1'–6"	1'–6"	0'–10"	0'–10"	0'–6"	0'–6"	0'–6"	0'–6"
6"	1'–11"	1'–11"	2'–2"	2'–2"	1'–7"	1'–7"	0'–10"	0'–10"	0'–6"	0'–6"
8"	2'–6"	2'–6"	3'–0"	3'–0"	2'–1"	2'–1"	1'–6"	1'–6"	1'–0"	1'–0"
10"	3'–3"	3'–3"	3'–10"	3'–10"	2'–9"	2'–9"	1'–11"	1'–11"	1'–0"	1'–0"
12"	3'–10"	3'–10"	4'–8"	4'–8"	3'–3"	3'–3"	2'–3"	2'–3"	1'–0"	1'–0"
14"	3'–10"	3'–10"	4'–11"	4'–11"	3'–5"	3'–5"	2'–5"	2'–5"	1'–6"	1'–6"
20"	5'–0"	5'–0"	6'–0"	6'–0"	4'–0"	4'–0"	3'–0"	3'–0"	2'–0"	2'–0"
24"	6'–0"	6'–0"	7'–0"	7'–0"	5'–0"	5'–0"	3'–0"	3'–0"	3'–0"	3'–0"
30"	7'–6"	7'–6"	8'–0"	8'–0"	6'–3"	6'–3"	4'–6"	4'–6"	3'–3"	3'–3"

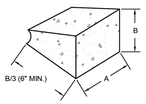

NOTES:
1. FITTINGS TO BE SEPARATED FROM BLOCKS WITH AN APPROVED BOND BREAKER, SUCH AS POLY WRAP.
2. ALL BLOCKS TO BEAR AGAINST UNDISTURBED MATERIAL.
3. DESIGN IS BASED ON 150 PSI MAIN PRESSURE AND 2000 PSF SOIL BEARING CAPACITY.

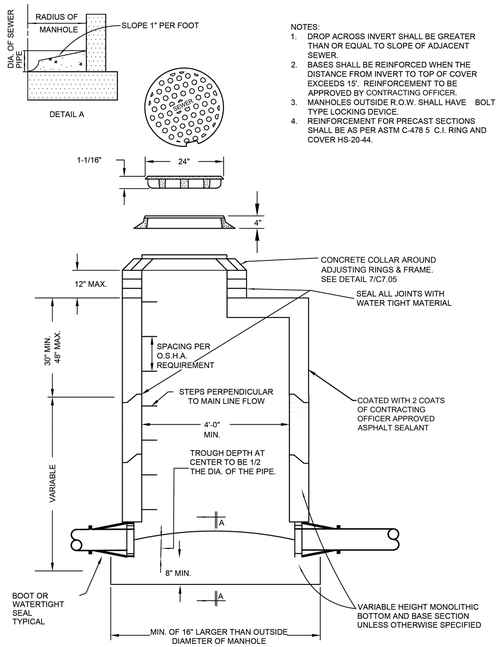

NOTES:
1. DROP ACROSS INVERT SHALL BE GREATER THAN OR EQUAL TO SLOPE OF ADJACENT SEWER.
2. BASES SHALL BE REINFORCED WHEN THE DISTANCE FROM INVERT TO TOP OF COVER EXCEEDS 15'. REINFORCEMENT TO BE APPROVED BY CONTRACTING OFFICER.
3. MANHOLES OUTSIDE R.O.W. SHALL HAVE BOLT TYPE LOCKING DEVICE.
4. REINFORCEMENT FOR PRECAST SECTIONS SHALL BE AS PER ASTM C-478 5 C.I. RING AND COVER HS-20-44.

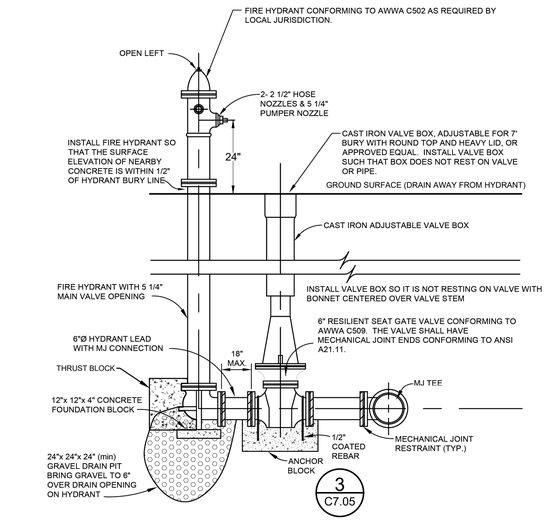

NOTES:
1. HYDRANT SHALL BE A MUELLER SUPER CENTURION 250.
2. METAL TO BE WRAPPED WITH 8 mil POLYETHYLENE.
3. TRACER WIRE SHALL BE INSTALLED PER SPECIFICATIONS.
4. FIRE HYDRANT BOLTS SHALL BE COVERED WITH 8 mil POLYETHYLENE PRIOR TO POURING CONCRETE THRUST BLOCKS.
5. FIRE HYDRANT MANUFACTURER AND PRODUCT DETAILS SHALL MEET THE REQUIREMENT OF YELLOWSTONE NP PUBLIC WORKS/MAINTENANCE DEPARTMENT TO ENSURE CONSISTENCY FOR MAINTENANCE/REPAIR.

4 C7.05 HYDRANT INSTALLATION
NOT TO SCALE

5 C7.05 FLATTOP MANHOLE
NOT TO SCALE

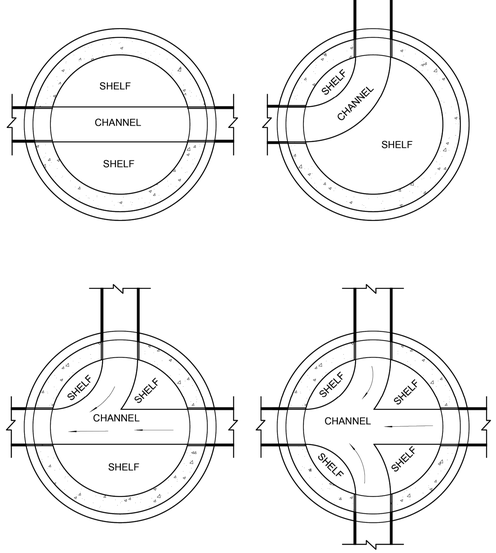

NOTES:
1. SLOPE ALL SHELVES TO CHANNEL AT 1" PER FOOT.
2. SEE PLAN-PROFILE SHEETS FOR SLOPE OF CHANNEL.

6 C7.05 MANHOLE CHANNEL
NOT TO SCALE

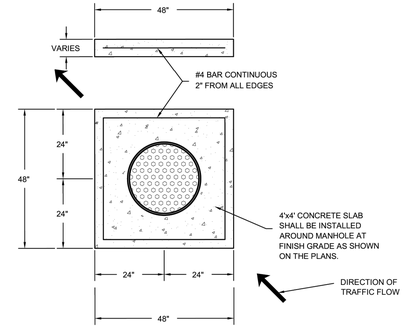

7 C7.05 CONCRETE COLLAR
NOT TO SCALE

MONTANA 6/18/26 JESSE CARLSON No. 10552PE LICENSED PROFESSIONAL ENGINEER

Professional Engineer JESSE CARLSON 20110 Date 6/18/26 WYOMING

A/E FIRM PRIME: STANTEC CHEYENNE, WY	DESIGNED: JC CADD: BB/PS/AS TECH. REVIEW: JC DATE: 06/18/2026	SUB SHEET NO. C7.05	TITLE OF SHEET CIVIL DETAILS SHEET 5 OF 7 YELLOWSTONE NATIONAL PARK	DRAWING NO. 101 198433 PMIS / PKG NO. 326141 SHEET 38 OF 94

PLOT DATE: 6/18/2026 9:18 AM USER: SACKETT, ABBY
C:\USERS\ASACKETT\STANTEC\CRONIN, MEGHAN - NPS\YELL\DD\326141A_326104\CADV2022\DRAWINGS\CIVIL\NE-CANYONICANYONIC7.01_DETAILS_1.DWG

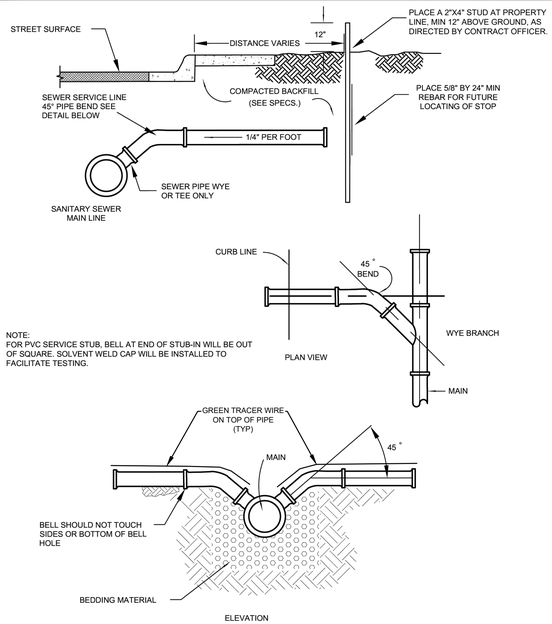

1 C7.06 SANITARY SEWER SERVICE LINE
NOT TO SCALE

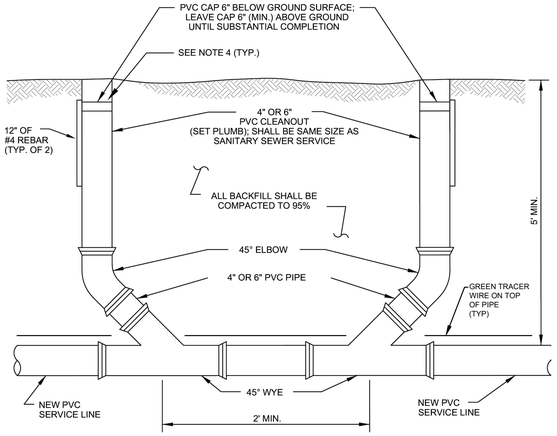

NOTES:

1. LOCATIONS SHALL BE DETERMINED IN THE FIELD BY THE ENGINEER.
2. FOR CLEANOUTS IN A DRIVEWAY OR ROAD, INSTALL A 2' SQ. CONCRETE COLLAR WITH A RECESSED METAL CAP FOR CLEANOUT.
3. ALL SANITARY SEWER PIPES & FITTINGS SHALL BE SCHEDULE 40 PVC GLUE JOINT.
4. COVERS FOR CLEANOUTS IN HARD SURFACED AREAS SHALL CONSIST OF A 10" LONG SLIP-TYPE VALVE BOX TOP SECTION WITH A LID MARKED "SEWER"

2 C7.06 TWO-WAY SANITARY SEWER CLEANOUT
NOT TO SCALE

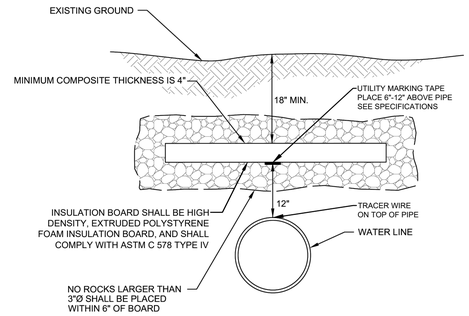

NOTES:

1. IF DEPTH OF COVER IS LESS THAN 3.5 FEET, BOARD SHALL EXTEND A MINIMUM OF FOUR FEET EITHER SIDE OF CENTER OF PIPE.
2. IF DEPTH OF COVER IS BETWEEN 3.5 AND 5.5 FEET, BOARD SHALL EXTEND A MINIMUM OF THREE FEET EITHER SIDE OF CENTER OF PIPE.

3 C7.06 INSULATION BOARD INSTALLATION
NOT TO SCALE

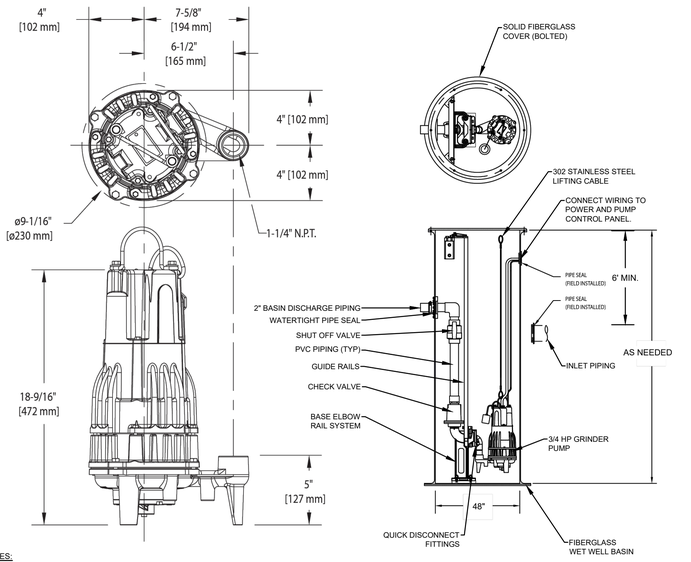

NOTES:

1. GRINDER PUMP SHALL BE A ZOELLER SIMPLEX 48" X 120" GRINDER PACKAGE WITH M803 OR APPROVED EQUAL IN TERMS OF SIZE, PERFORMANCE, AND FUNCTIONALITY.
2. SEE ARCHITECTURAL PLANS AND STRUCTURAL PLANS FOR WET WELL LOCATION.
3. FLOATS SHALL BE INSTALLED TO A PVC FLOAT TREE THAT IS MOUNTED TO THE SIDE OF THE WET WELL. THE FLOAT TREE SHALL BE EASILY REMOVABLE, IN ITS ENTIRETY, WITHOUT HAVING TO ENTER THE WET WELL. FLOATS SHALL BE PROGRAMMED TO TURN THE PUMP "OFF" WHEN WET WELL LEVEL IS 1.83' ABOVE THE SUMP BOTTOM, PUMP "ON" WHEN WET WELL LEVEL IS 4' ABOVE THE SUMP BOTTOM, AND PUMP "ALARM" WHEN WET WELL LEVEL IS 4.5' ABOVE THE PUMP INTAKE.
4. FLOATS SHALL CONNECT TO THE PUMP CONTROL PANEL. PUMP CONTROL PANEL SHALL BE MOUNTED TO THE INSIDE GARAGE WALL. PUMP CONTROL PANEL SHALL INCLUDE A HAND-OFF-AUTO (HOA) SWITCH, AN ELAPSED TIME METER, AND A PUMP CYCLE COUNTER.
5. ALL METAL FASTENERS USED IN THE WET WELL SHALL BE STAINLESS STEEL (GRADE 302).
6. SHUT-OFF VALVE SHALL BE EASILY REACHABLE AND OPERABLE FROM THE TOP OF THE WET WELL.

4 C7.06 GRINDER PUMP
NOT TO SCALE

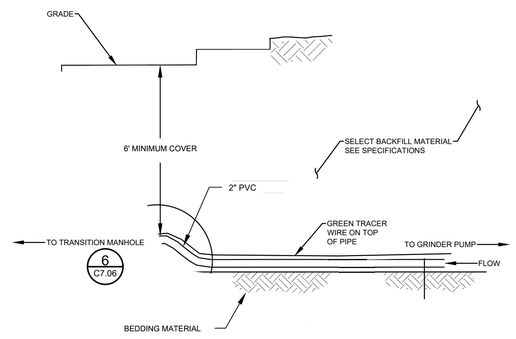

5 C7.06 FORCE SEWER SERVICE LINE
NOT TO SCALE

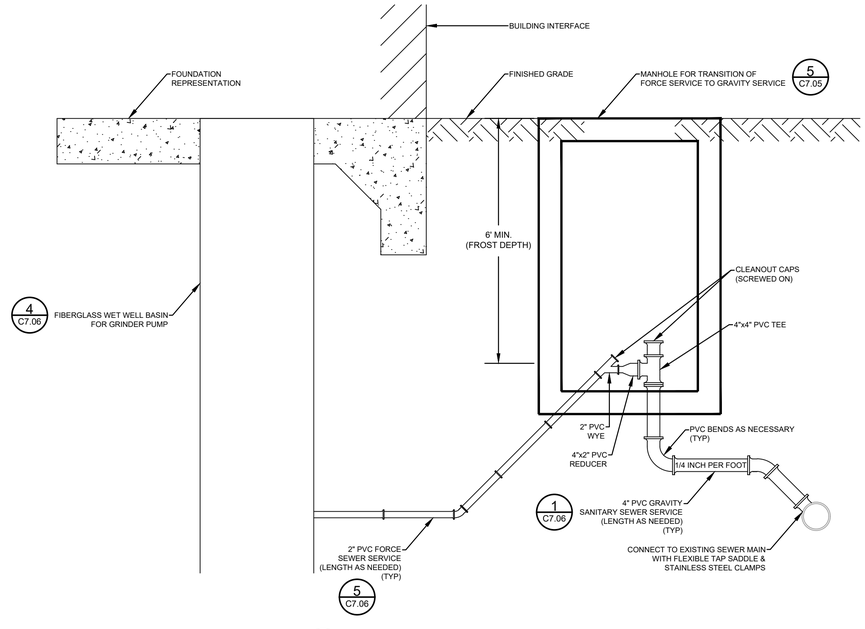

6 C7.06 FORCE TO GRAVITY SERVICE TRANSITION
NOT TO SCALE

MONTANA
JESSE CARLSON
No. 105520PE
LICENSED PROFESSIONAL ENGINEER

Professional Engineer
JESSE CARLSON
20110
Date
WYOMING

A/E FIRM PRIME: STANTEC CHEYENNE, WY	DESIGNED: JC CADD: BB/PS/AS TECH. REVIEW: JC DATE: 06/26/2026	SUB SHEET NO. C7.06	TITLE OF SHEET CIVIL DETAILS SHEET 6 OF 7 YELLOWSTONE NATIONAL PARK

DRAWING NO. 101 198433
PMIS / PKG NO. 326141
SHEET 39 OF 94

PLOT DATE: 7/21/2026 2:47 PM USER: SOUTHWORTH, PAUL
C:\USERS\PSOUTHWORTH\STANTEC\CRONIN, MEGHAN - NPSIYELL\DD\326141A_326104\CADV2022DRAWINGS\CIVIL\NE-CANYONICANYON\C7.01_DETAILS_1.DWG

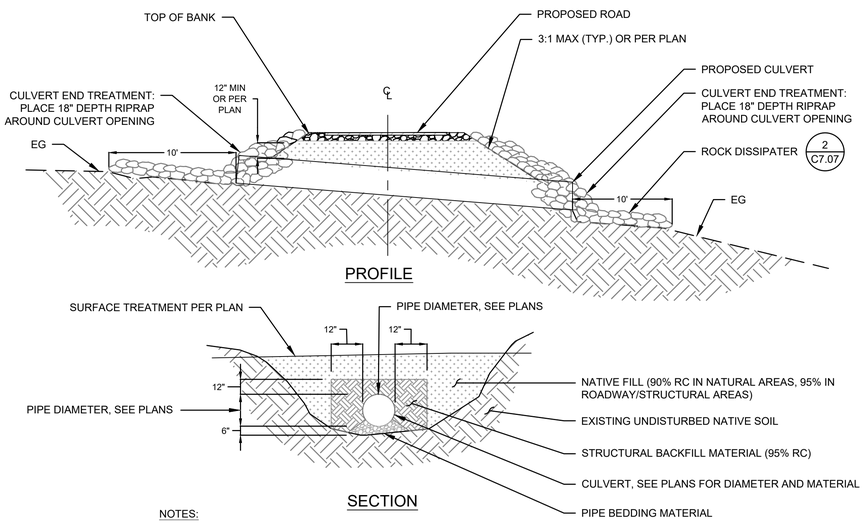

NOTES:

1. DO NOT RAISE OUTLET ABOVE EG OR DRAINAGE BED.
2. MIN COVER OVER CULVERT SHALL BE 12 INCHES TO BOTTOM OF PAVEMENT STRUCTURAL SECTION OR GROUND SURFACE IN NON-PAVED AREAS UNLESS NOTED OTHERWISE.
3. CULVERT SHALL HAVE RIPRAP ON BOTH THE INLET AND OUTLET AS SHOWN.

1 CULVERT
C7.07 NOT TO SCALE

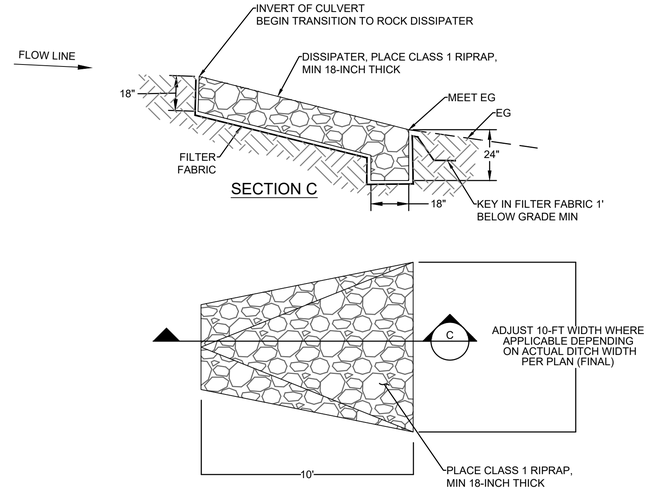

NOTES:

1. TRANSITION OVER A 10' DITCH LENGTH UNLESS OTHERWISE SHOWN ON PLAN.
2. RESTORE ALL AREAS DISTURBED OUTSIDE OF ROCK SURFACE AS DIRECTED BY NPS CONTRACTING OFFICER.

2 ROCK DISSIPATOR
C7.07 NOT TO SCALE

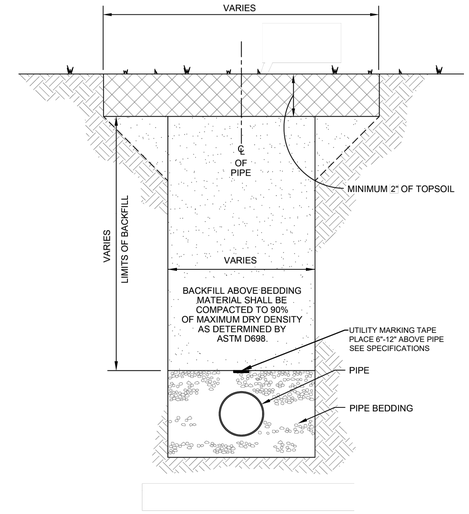

NOTES:

1. THIS RESTORATION WILL BE REQUIRED ON ALL DISTURBED AREAS THAT WILL NOT BE COVERED WITH PAVEMENT OR OTHER SURFACING.
2. ROCKS LARGER THAN 2" CANNOT BE PLACED WITHIN TOPSOIL.

3 RESTORATION - OPEN AREAS
C7.07 NOT TO SCALE

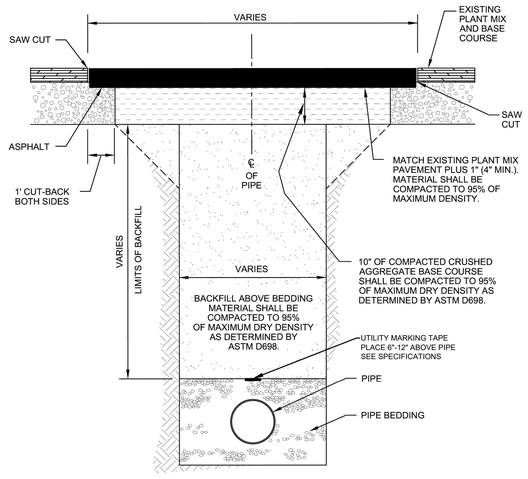

NOTE: THIS RESTORATION WILL BE REQUIRED ON ALL AREAS WITH AN EXISTING ASPHALT SURFACE.

4 RESTORATION - ASPHALT PAVEMENT
C7.07 NOT TO SCALE

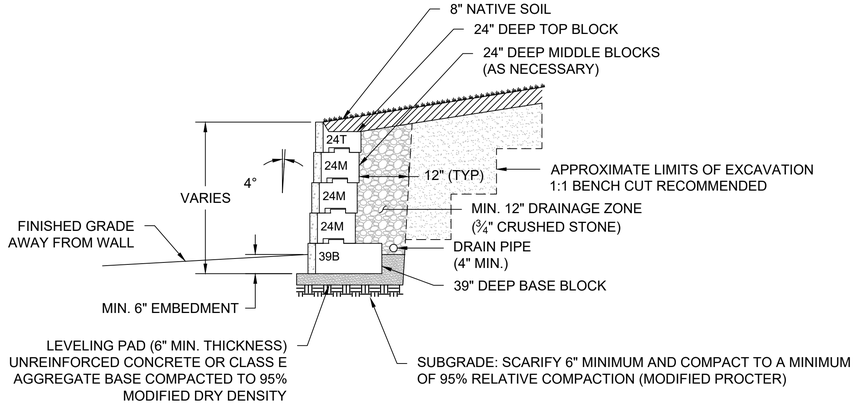

NOTES:

1. MODULAR BLOCK RETAINING WALL SHALL BE RECON WALL SYSTEMS™, GRAVITY RETAINING WALL, PRODUCT OR APPROVED EQUAL IN TERMS OF SIZE, PERFORMANCE, AND FUNCTIONALITY.
2. FINISHED GRADE AT TOP OF WALL SHALL BE GRADED TO PREVENT PONDING.
2. THE LEVELING PAD MUST EXTEND 6" (MINIMUM) IN FRONT AND 6" (MINIMUM) IN BACK OF THE BASE BLOCK.
3. SET THE BASE BLOCK AND CHECK FOR LEVEL FROM FRONT TO BACK.
4. EMBEDMENT SHALL BE A MINIMUM 6" WITH LEVEL GRADE AT THE TOE.
5. COMPACTION TO THE SPECIFIED EMBEDMENT DEPTH SHALL BE DONE IN FRONT OF THE BASE BLOCK BEFORE COMPACTION IS DONE BEHIND THE BASE BLOCK.
6. DRAIN TILE SHALL BE PERFORATED 4" PVC PIPE WRAPPED IN A NON-WOVEN GEOTEXTILE FABRIC. DRAIN TILE SHALL DAYLIGHT AT EACH END OF THE WALL AND THRU THE WALL FACE AT 50-FT INCREMENTS.
7. DRAINAGE ZONE (3/4" CRUSHED STONE) INTERFACE SHALL BE WRAPPED IN NON-WOVEN GEOTEXTILE FABRIC ON ALL SIDES.
8. SEE BLOCK MANUFACTURER'S SPECIFICATION & INSTALLATION INSTRUCTIONS FOR MORE DETAILS.

5 MODULAR BLOCK RETAINING WALL
C7.07 NOT TO SCALE

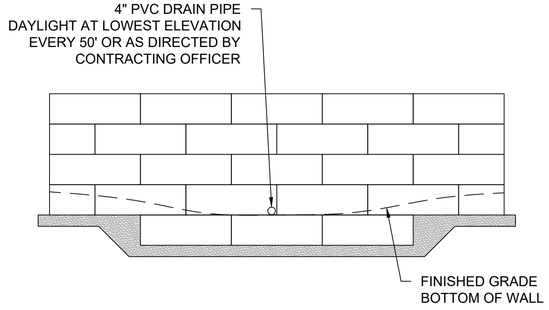

PARTIAL WALL PROFILE

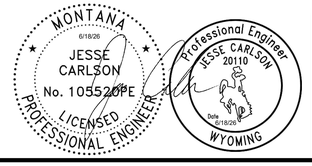

A/E FIRM PRIME: STANTEC CHEYENNE, WY	DESIGNED: JC CADD: BB/PS/AS TECH. REVIEW: JC DATE: 06/18/2026	SUB SHEET NO. C7.07	TITLE OF SHEET CIVIL DETAILS SHEET 7 OF 7 YELLOWSTONE NATIONAL PARK

DRAWING NO. 101 198433
PMIS / PKG NO. 326141
SHEET 40 OF 94

PLOT DATE: 6/18/2026 9:19 AM USER: SACKETT, ABBY
C:\USERS\ASACKETT\STANTEC\CRONIN, MEGHAN - NPS\YELL\DD\326141A_326104\CADV2022DRAWINGS\CIVILINE-CANYONICANYONIC7.01_DETAILS_1.DWG

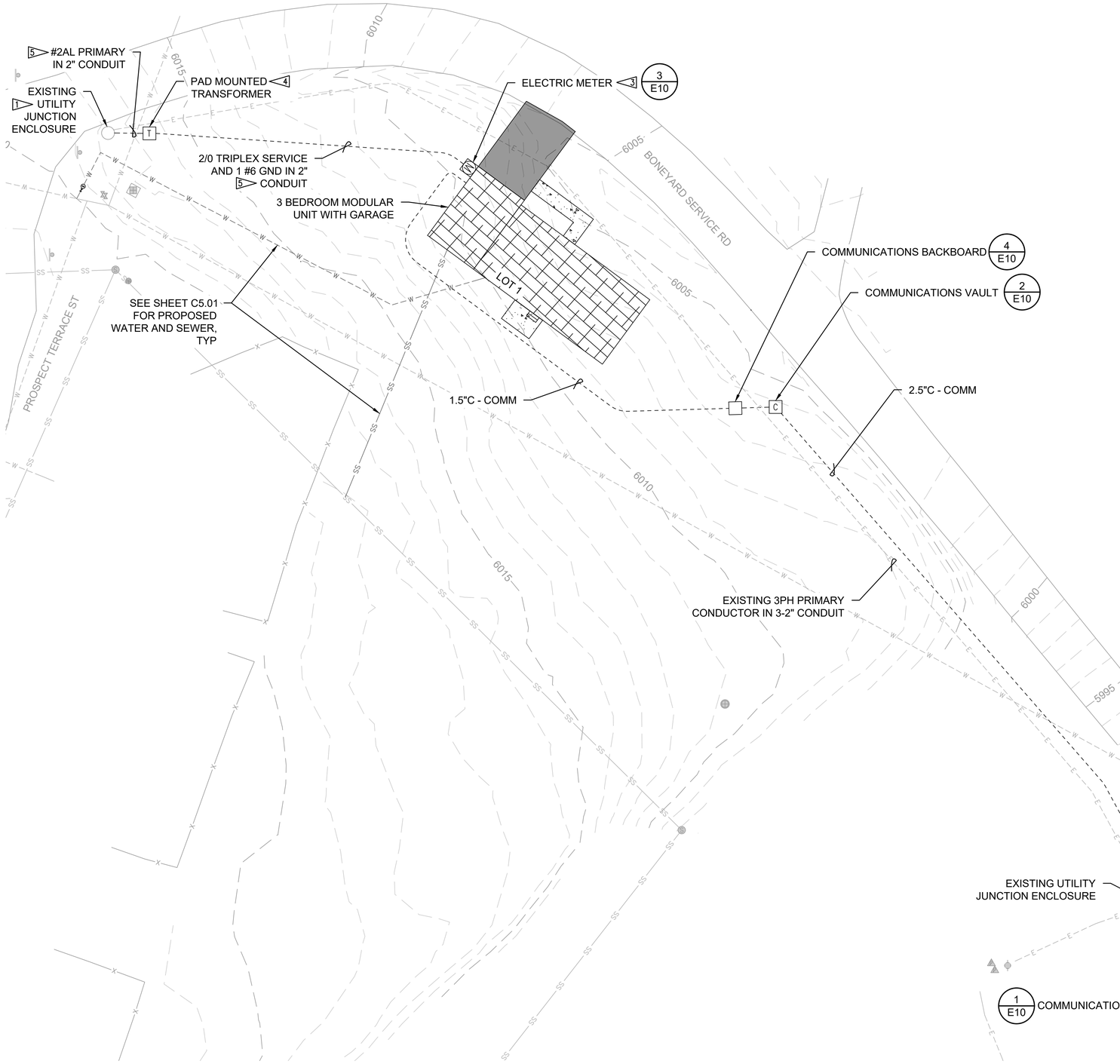

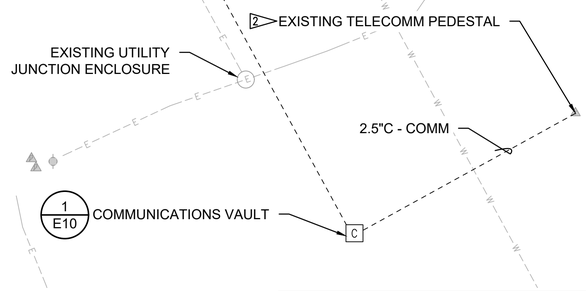

LEGEND

- UNDERGROUND RACEWAY
- (M) COMBINATION 200A METER SOCKET WITH DISCONNECT
- C 2' X 3' X 3' COMMUNICATIONS VAULT
- COMMUNICATIONS BACKBOARD
- T THREE PHASE PADMOUNT LID AND UTILITY TRANSFORMER

GENERAL NOTES:

1. JUNCTION BOX LOCATIONS AND CONDUIT ROUTING ARE SCHEMATIC. ALIGN JUNCTION BOXES WITH PAVEMENT EDGES. CONDUIT ROUTING SHALL AVOID TREES. SUBMIT CONDUIT AND JUNCTION BOX LAYOUT PLAN TO ENGINEER PRIOR TO INSTALLATION.
2. MAINTAIN AND PROTECT ALL EXISTING UNDERGROUND UTILITIES. CONTRACTOR TO PROVIDE LOCATE PRIOR TO ANY EXCAVATION. PRIOR TO STARTING CONSTRUCTION, CONTRACTOR SHALL CALL "ONE-CALL" FOR UTILITY LOCATIONS.
3. ALL SPARE/EMPTY CONDUIT TO BE PROVIDED WITH NYLON PULL STRINGS.
4. ALL JUNCTION BOXES AND CONDUITS ARE SHOWN IN APPROXIMATE LOCATIONS. VERIFY LOCATION OF PROPERTY LINE, EASEMENTS AND UTILITIES PRIOR TO PLACEMENT.
5. ALL CONDUITS LENGTHS ARE APPROXIMATE.
6. GROUND ALL IN-GROUND JUNCTION BOXES, HAND HOLES, AND PULL BOXES.
7. ELECTRICAL WORK SHALL COMPLY WITH NEC 2026.

KEY NOTES:

1. INTERCEPT EXISTING UTILITY JUNCTION ENCLOSURE. COORDINATE WITH NORTHWESTERN ENERGY.
2. INTERCEPT EXISTING TELECOMM PEDESTAL. COORDINATE WITH SERVICE PROVIDER.
3. PROVIDE METER BASE AND TELECOMM BOX AT EACH MODULAR UNIT PER UTILITY REQUIREMENTS. COORDINATE WITH SERVING UTILITY. REFER TO DETAIL 3 ON SHEET E4.
4. UTILITY PROVIDED PAD MOUNT LID AND TRANSFORMER. COORDINATE WITH NORTHWESTERN ENERGY.
5. UTILITY PROVIDED CONDUIT AND CONDUCTORS. COORDINATE WITH NORTHWESTERN ENERGY.

20 0 20 40
SCALE OF FEET

Professional Engineer TIMOTHY L. JANOFF 8320 WYOMING

A/E FIRM PRIME: STANTEC CHEYENNE, WY	DESIGNED: JC CADD: BB/PS/AS TECH. REVIEW: JC DATE: 06/12/2026	SUB SHEET NO. E1	TITLE OF SHEET MAMMOTH ELECTRICAL AND TELECOM SITE PLAN 1 OF 2 YELLOWSTONE NATIONAL PARK

DRAWING NO. 101 198433
PMIS / PKG NO. 326141
SHEET 41 OF 94

PLOT DATE: 6/10/2026 2:05 PM USER: SACKETT, ABBY
C:\USERS\ASACKETT\STANTEC\CRONIN, MEGHAN - NPS\YELL\DD\326141A_326104\CADV2022DRAWINGS\CIVIL\MAMMOTH\C6.01_MAMMOTH_ELECTRICAL.DWG

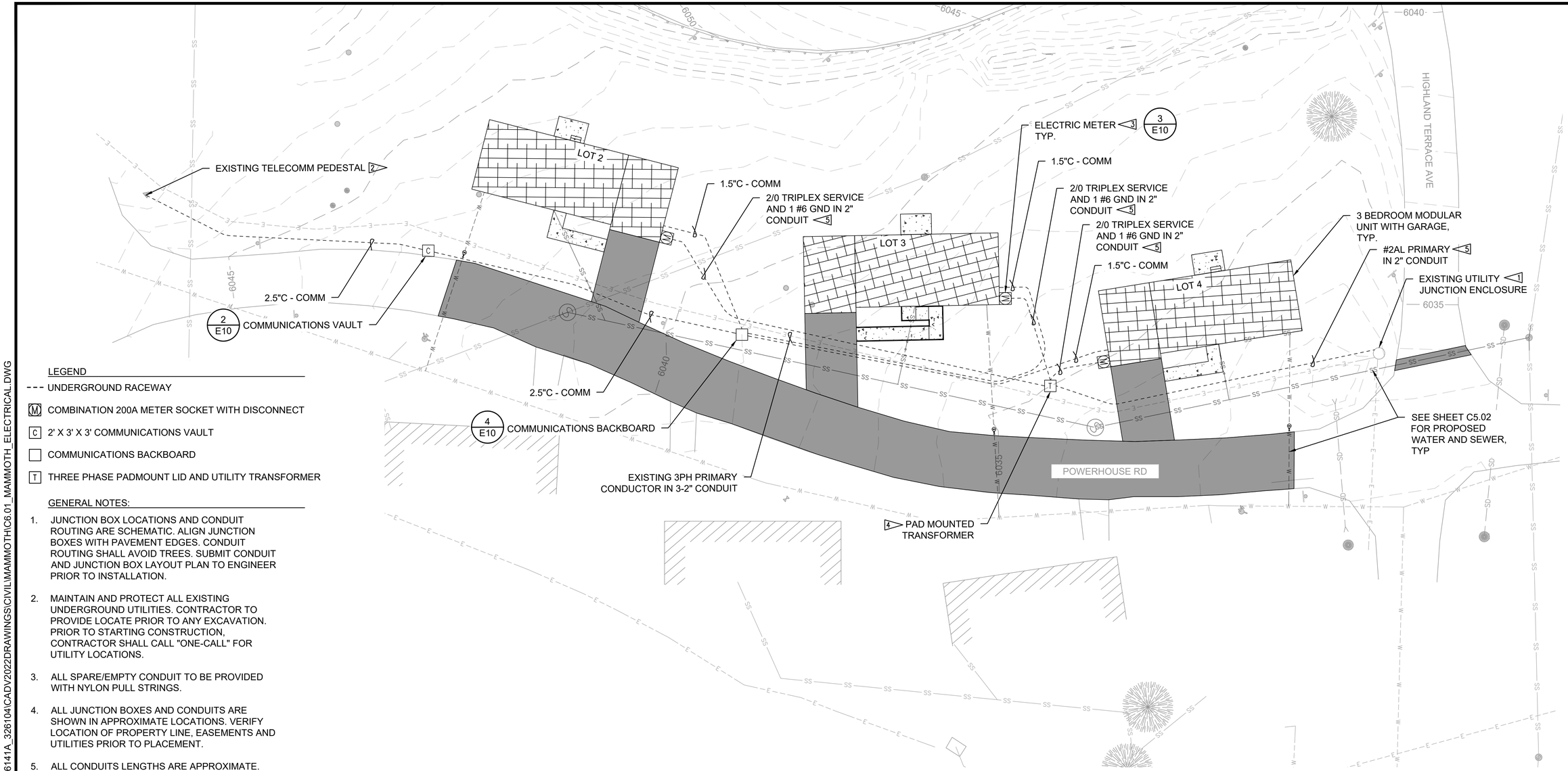

LEGEND

- UNDERGROUND RACEWAY
- M COMBINATION 200A METER SOCKET WITH DISCONNECT
- C 2' X 3' X 3' COMMUNICATIONS VAULT
- COMMUNICATIONS BACKBOARD
- T THREE PHASE PADMOUNT LID AND UTILITY TRANSFORMER

GENERAL NOTES:

1. JUNCTION BOX LOCATIONS AND CONDUIT ROUTING ARE SCHEMATIC. ALIGN JUNCTION BOXES WITH PAVEMENT EDGES. CONDUIT ROUTING SHALL AVOID TREES. SUBMIT CONDUIT AND JUNCTION BOX LAYOUT PLAN TO ENGINEER PRIOR TO INSTALLATION.
2. MAINTAIN AND PROTECT ALL EXISTING UNDERGROUND UTILITIES. CONTRACTOR TO PROVIDE LOCATE PRIOR TO ANY EXCAVATION. PRIOR TO STARTING CONSTRUCTION, CONTRACTOR SHALL CALL "ONE-CALL" FOR UTILITY LOCATIONS.
3. ALL SPARE/EMPTY CONDUIT TO BE PROVIDED WITH NYLON PULL STRINGS.
4. ALL JUNCTION BOXES AND CONDUITS ARE SHOWN IN APPROXIMATE LOCATIONS. VERIFY LOCATION OF PROPERTY LINE, EASEMENTS AND UTILITIES PRIOR TO PLACEMENT.
5. ALL CONDUITS LENGTHS ARE APPROXIMATE.
6. GROUND ALL IN-GROUND JUNCTION BOXES, HAND HOLES, AND PULL BOXES.
7. ELECTRICAL WORK SHALL COMPLY WITH NEC 2026.

KEY NOTES:

1. INTERCEPT EXISTING UTILITY JUNCTION ENCLOSURE. COORDINATE WITH NORTHWESTERN ENERGY.
2. INTERCEPT EXISTING TELECOMM PEDESTAL. COORDINATE WITH SERVICE PROVIDER.
3. PROVIDE METER BASE AND TELECOMM BOX AT EACH MODULAR UNIT PER UTILITY REQUIREMENTS. COORDINATE WITH SERVING UTILITY. REFER TO DETAIL 3 ON SHEET E4.
4. UTILITY PROVIDED PAD MOUNT LID AND TRANSFORMER. COORDINATE WITH NORTHWESTERN ENERGY.
5. UTILITY PROVIDED CONDUIT AND CONDUCTORS. COORDINATE WITH NORTHWESTERN ENERGY.

20 0 20 40
SCALE OF FEET

Professional Engineer TIMOTHY L. JANOF 8320 WYOMING

A/E FIRM PRIME: STANTEC CHEYENNE, WY	DESIGNED: JC CADD: BB/PS/AS TECH. REVIEW: JC DATE: 06/12/2026	SUB SHEET NO. E2	TITLE OF SHEET MAMMOTH ELECTRICAL AND TELECOM SITE PLAN 2 OF 2 YELLOWSTONE NATIONAL PARK	DRAWING NO. 101 198433 PMIS / PKG NO. 326141 SHEET 42 OF 94

PLOT DATE: 6/10/2026 2:06 PM USER: SACKETT, ABBY
C:\USERS\ASACKETT\STANTEC\CRONIN, MEGHAN - NPS\YELL\DD\326141A_326104\CADV2022DRAWINGS\CIVIL\MAMMOTHC6.01_MAMMOTH_ELECTRICAL.DWG

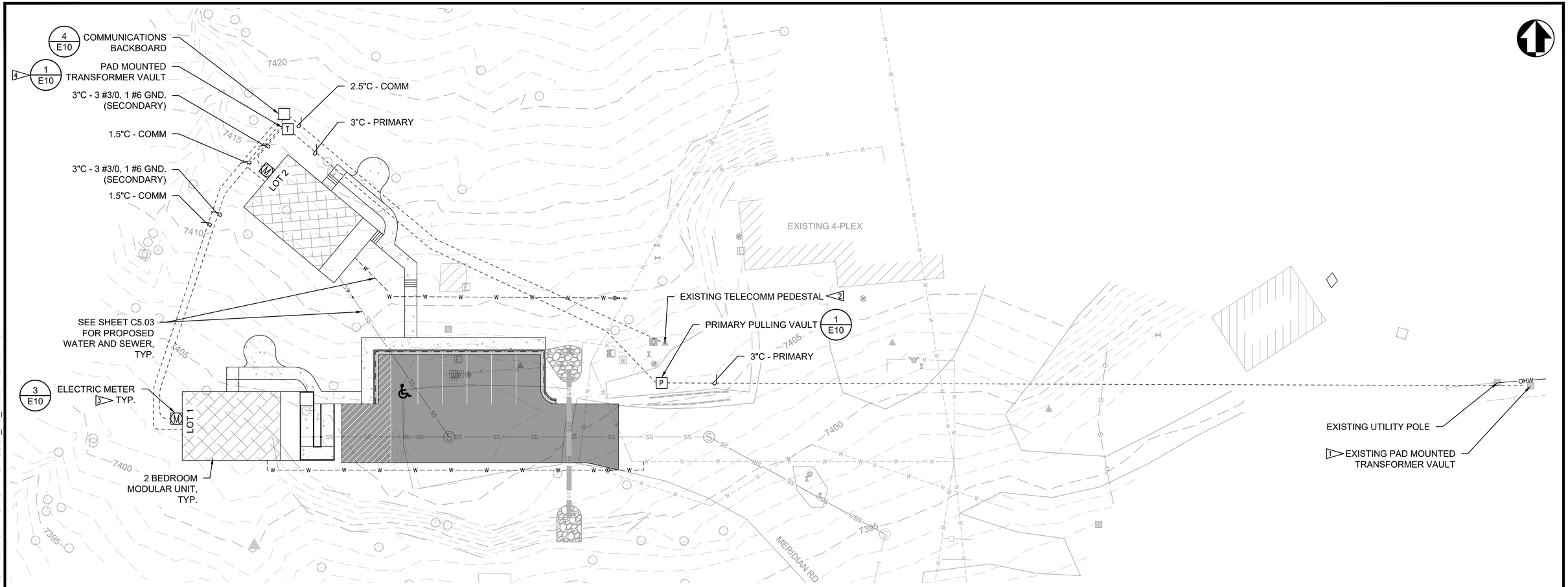

LEGEND

- UNDERGROUND RACEWAY
- [M] COMBINATION 200A METER SOCKET WITH DISCONNECT
- [ ] COMMUNICATIONS BACKBOARD
- [T] THREE PHASE PRIMARY VAULT WITH PAD MOUNTED TRANSFORMER LID
- [P] PRIMARY PULLING VAULT

GENERAL NOTES:

1. JUNCTION BOX LOCATIONS AND CONDUIT ROUTING ARE SCHEMATIC. ALIGN JUNCTION BOXES WITH PAVEMENT EDGES. CONDUIT ROUTING SHALL AVOID TREES. SUBMIT CONDUIT AND JUNCTION BOX LAYOUT PLAN TO ENGINEER PRIOR TO INSTALLATION.
2. MAINTAIN AND PROTECT ALL EXISTING UNDERGROUND UTILITIES. CONTRACTOR TO PROVIDE LOCATE PRIOR TO ANY EXCAVATION. PRIOR TO STARTING CONSTRUCTION, CONTRACTOR SHALL CALL "ONE-CALL" FOR UTILITY LOCATIONS.
3. ALL SPARE/EMPTY CONDUIT TO BE PROVIDED WITH NYLON PULL STRINGS.
4. ALL JUNCTION BOXES AND CONDUITS ARE SHOWN IN APPROXIMATE LOCATIONS. VERIFY LOCATION OF PROPERTY LINE, EASEMENTS AND UTILITIES PRIOR TO PLACEMENT.
5. ALL CONDUITS LENGTHS ARE APPROXIMATE.
6. GROUND ALL IN-GROUND JUNCTION BOXES, HAND HOLES, AND PULL BOXES.
7. ELECTRICAL WORK SHALL COMPLY WITH NEC 2026.

KEY NOTES:

1. INTERCEPT EXISTING PAD MOUNTED TRANSFORMER VAULT. PROVIDE RIGID STEEL SWEEP AND RISER 10' UP POLE. COORDINATE WITH FLATHEAD ELECTRIC.
2. INTERCEPT EXISTING TELECOMM PEDESTAL. COORDINATE WITH SERVICE PROVIDER.
3. PROVIDE METER BASE AND TELECOMM BOX AT EACH MODULAR UNIT PER UTILITY REQUIREMENTS. COORDINATE WITH SERVING UTILITY. REFER TO DETAIL 3 ON SHEET E8.
4. PROVIDE THREE PHASE PRIMARY VAULT WITH PAD MOUNT TRANSFORMER LID PER UTILITY REQUIREMENTS. COORDINATE WITH FLATHEAD ELECTRIC.

20 0 20 40
SCALE OF FEET

MONTANA 6/18/26 TIMOTHY J. NOF 14037PE LICENSED PROFESSIONAL ENGINEER

A/E FIRM PRIME: STANTEC CHEYENNE, WY	DESIGNED: JC CADD: BB/PS/AS TECH. REVIEW: JC DATE: 06/12/2026	SUB SHEET NO. E3	TITLE OF SHEET NE ENTRANCE ELECTRICAL SITE PLAN YELLOWSTONE NATIONAL PARK	DRAWING NO. 101 198433 PMIS / PKG NO. 326141 SHEET 43 OF 94

PLOT DATE: 6/10/2026 2:06 PM USER: SACKETT, ABBY
C:\USERS\ASACKETT\STANTEC\CRONIN, MEGHAN - NPS\YELL\DD\326141A_326104\CADV2022DRAWINGS\CIVILINE-CANYON\C6.01_NE_ELECTRICAL.DWG

EXISTING TELECOMM PEDESTAL

2.5"C - COMM

COMMUNICATIONS VAULT 2/E10

2.5"C - COMM

COMMUNICATIONS VAULT 2/E10

2.5"C - COMM

SEE SHEET E5

EXISTING UTILITY POLE

1PH PRIMARY IN 2" CONDUIT [2]

LEGEND

- UNDERGROUND RACEWAY
- [M] COMBINATION 200A METER SOCKET WITH DISCONNECT
- [C] 2' X 3' X 3' COMMUNICATIONS VAULT
- COMMUNICATIONS BACKBOARD
- [T] THREE PHASE PADMOUNT LID AND UTILITY TRANSFORMER

KEY NOTES:

[1] INTERCEPT EXISTING TELECOMM PEDESTAL. COORDINATE WITH SERVICE PROVIDER.

[2] UTILITY PROVIDED CONDUIT AND CONDUCTORS. COORDINATE WITH NORTHWESTERN ENERGY.

GENERAL NOTES:

1. JUNCTION BOX LOCATIONS AND CONDUIT ROUTING ARE SCHEMATIC. ALIGN JUNCTION BOXES WITH PAVEMENT EDGES. CONDUIT ROUTING SHALL AVOID TREES. SUBMIT CONDUIT AND JUNCTION BOX LAYOUT PLAN TO ENGINEER PRIOR TO INSTALLATION.
2. MAINTAIN AND PROTECT ALL EXISTING UNDERGROUND UTILITIES. CONTRACTOR TO PROVIDE LOCATE PRIOR TO ANY EXCAVATION. PRIOR TO STARTING CONSTRUCTION, CONTRACTOR SHALL CALL "ONE-CALL" FOR UTILITY LOCATIONS.
3. ALL SPARE/EMPTY CONDUIT TO BE PROVIDED WITH NYLON PULL STRINGS.
4. ALL JUNCTION BOXES AND CONDUITS ARE SHOWN IN APPROXIMATE LOCATIONS. VERIFY LOCATION OF PROPERTY LINE, EASEMENTS AND UTILITIES PRIOR TO PLACEMENT.
5. ALL CONDUITS LENGTHS ARE APPROXIMATE.
6. GROUND ALL IN-GROUND JUNCTION BOXES, HAND HOLES, AND PULL BOXES.
7. ELECTRICAL WORK SHALL COMPLY WITH NEC 2026.

20 0 20 40
SCALE OF FEET

Professional Engineer
TIMOTHY L. JANOF
8320
WYOMING

A/E FIRM PRIME: STANTEC CHEYENNE, WY	DESIGNED: JC CADD: BB/PS/AS TECH. REVIEW: JC DATE: 06/12/2026	SUB SHEET NO. E4	TITLE OF SHEET CANYON VILLAGE ELECTRICAL SITE PLAN SHEET 1 OF 3 YELLOWSTONE NATIONAL PARK

DRAWING NO. 101 198433
PMIS / PKG NO. 326141
SHEET 44 OF 94

PLOT DATE: 6/10/2026 2:06 PM USER: SACKETT, ABBY
C:\USERS\ASACKETT\STANTEC\CRONIN, MEGHAN - NPS\YELLDD\326141A_326104\CADV2022DRAWINGS\CIVILINE-CANYON\CANYONIC6.02_CANYON_ELECTRICAL.DWG

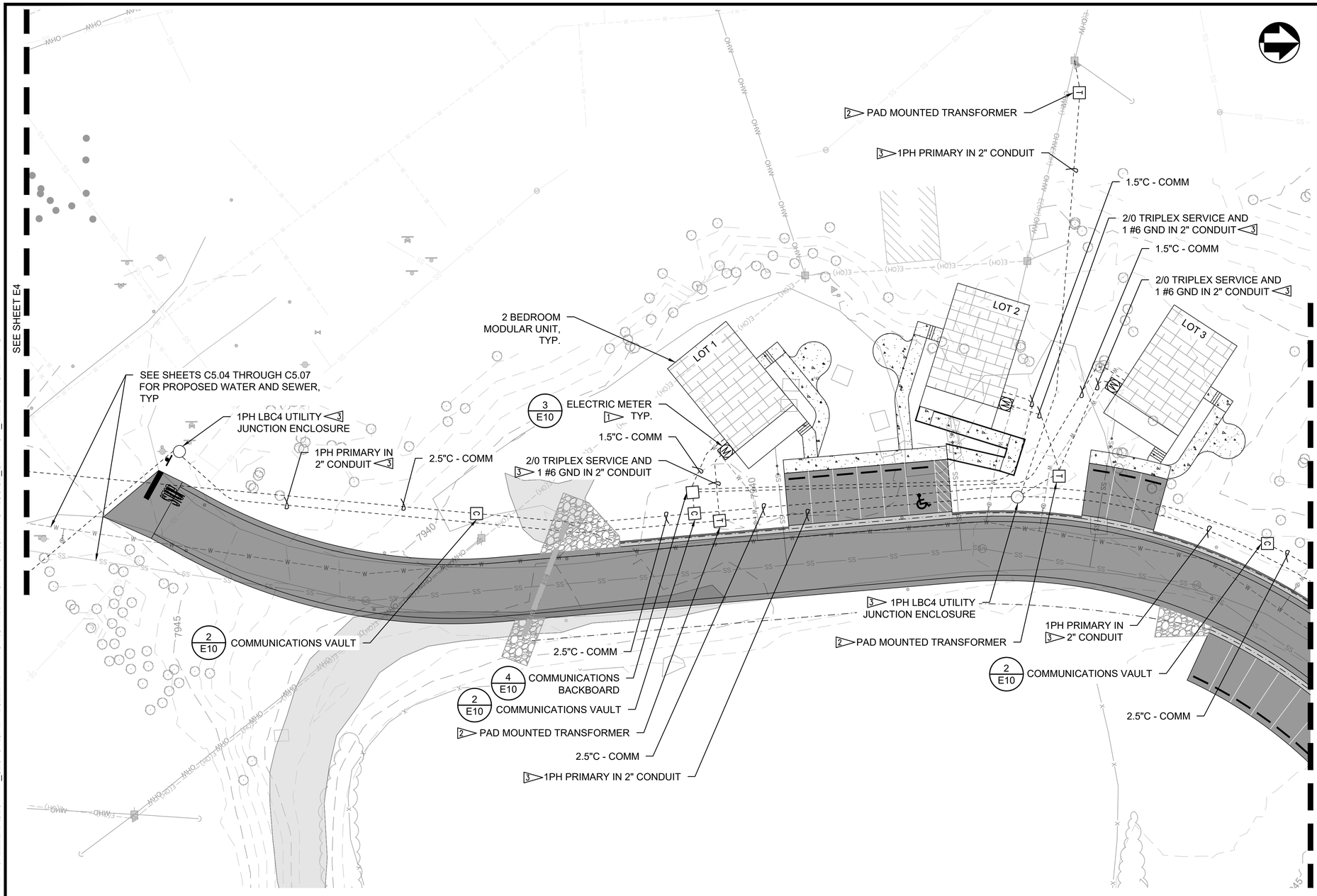

LEGEND

- UNDERGROUND RACEWAY
- [M] COMBINATION 200A METER SOCKET WITH DISCONNECT
- [C] 2' X 3' X 3' COMMUNICATIONS VAULT
- COMMUNICATIONS BACKBOARD
- [T] THREE PHASE PADMOUNT LID AND UTILITY TRANSFORMER
- UTILITY JUNCTION ENCLOSURE

GENERAL NOTES:

1. JUNCTION BOX LOCATIONS AND CONDUIT ROUTING ARE SCHEMATIC. ALIGN JUNCTION BOXES WITH PAVEMENT EDGES. CONDUIT ROUTING SHALL AVOID TREES. SUBMIT CONDUIT AND JUNCTION BOX LAYOUT PLAN TO ENGINEER PRIOR TO INSTALLATION.
2. MAINTAIN AND PROTECT ALL EXISTING UNDERGROUND UTILITIES. CONTRACTOR TO PROVIDE LOCATE PRIOR TO ANY EXCAVATION. PRIOR TO STARTING CONSTRUCTION, CONTRACTOR SHALL CALL "ONE-CALL" FOR UTILITY LOCATIONS.
3. ALL SPARE/EMPTY CONDUIT TO BE PROVIDED WITH NYLON PULL STRINGS.
4. ALL JUNCTION BOXES AND CONDUITS ARE SHOWN IN APPROXIMATE LOCATIONS. VERIFY LOCATION OF PROPERTY LINE, EASEMENTS AND UTILITIES PRIOR TO PLACEMENT.
5. ALL CONDUITS LENGTHS ARE APPROXIMATE.
6. GROUND ALL IN-GROUND JUNCTION BOXES, HAND HOLES, AND PULL BOXES.
7. ELECTRICAL WORK SHALL COMPLY WITH NEC 2026.

KEY NOTES:

1. PROVIDE METER BASE AND TELCOMM BOX AT EACH MODULAR UNIT PER UTILITY REQUIREMENTS. COORDINATE WITH SERVING UTILITY. REFER TO DETAIL 3 ON SHEET E9.
2. UTILITY PROVIDED PAD MOUNT LID AND TRANSFORMER. COORDINATE WITH NORTHWESTERN ENERGY.
3. UTILITY PROVIDED CONDUIT AND CONDUCTORS. COORDINATE WITH NORTHWESTERN ENERGY.

20 0 20 40
SCALE OF FEET

Professional Engineer
TIMOTHY L. JANOF
8320
WYOMING

A/E FIRM PRIME: STANTEC CHEYENNE, WY	DESIGNED: JC CADD: BB/PS/AS TECH. REVIEW: JC DATE: 06/12/2026	SUB SHEET NO. E5	TITLE OF SHEET CANYON VILLAGE ELECTRICAL SITE PLAN SHEET 2 OF 3 YELLOWSTONE NATIONAL PARK	DRAWING NO. 101 198433 PMIS / PKG NO. 326141 SHEET 45 OF 94

PLOT DATE: 6/10/2026 2:07 PM USER: SACKETT, ABBY
C:\USERS\ASACKETT\STANTEC\CRONIN, MEGHAN - NPS\YELL\DD\326141A_326104\CADV2022DRAWINGS\CIVIL\NE-CANYON\CANYONIC6.02_CANYON_ELECTRICAL.DWG

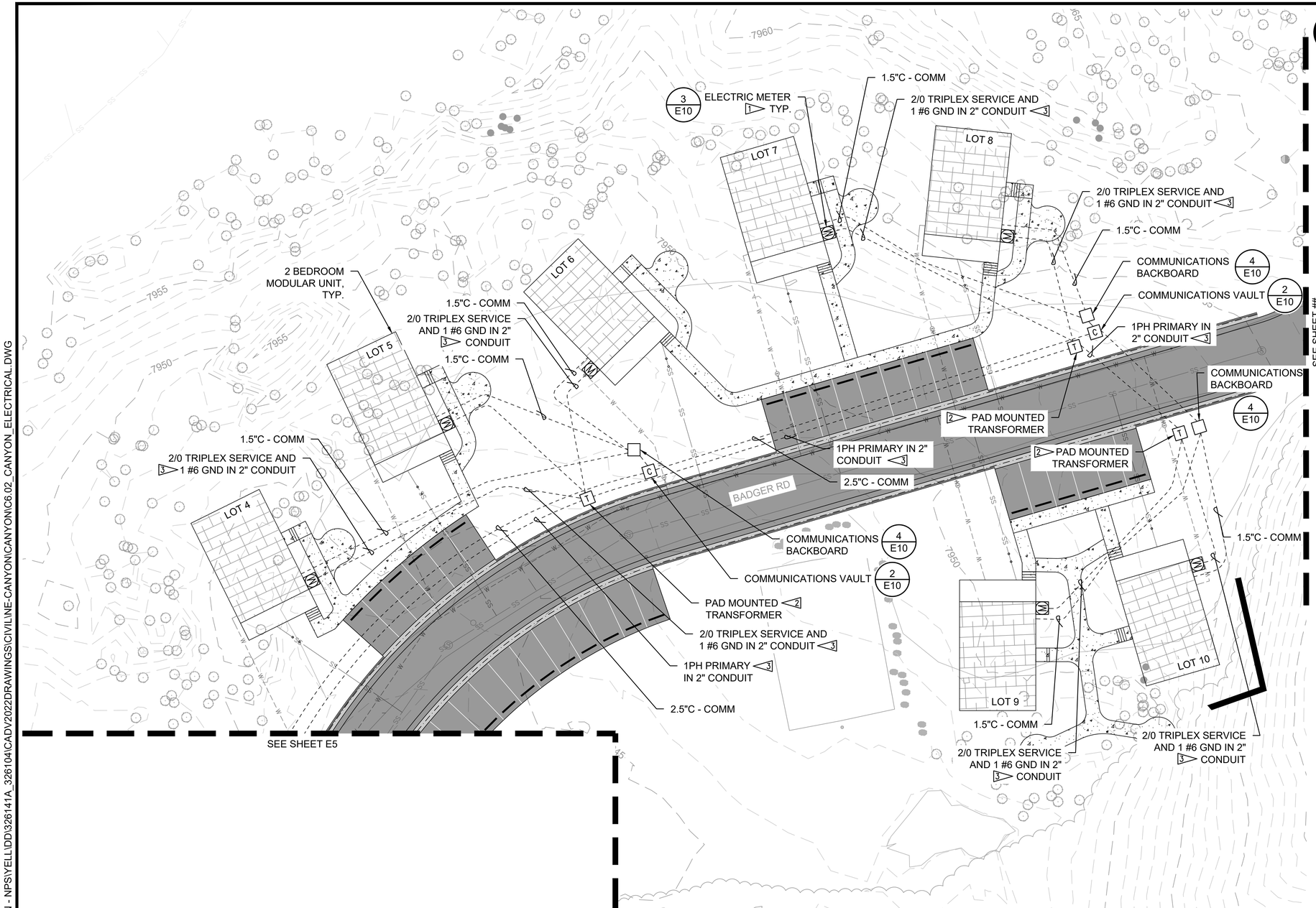

LEGEND

- UNDERGROUND RACEWAY
- (M) COMBINATION 200A METER SOCKET WITH DISCONNECT
- C 2' X 3' X 3' COMMUNICATIONS VAULT
- COMMUNICATIONS BACKBOARD
- T THREE PHASE PADMOUNT LID AND UTILITY TRANSFORMER
- UTILITY JUNCTION ENCLOSURE

GENERAL NOTES:

1. JUNCTION BOX LOCATIONS AND CONDUIT ROUTING ARE SCHEMATIC. ALIGN JUNCTION BOXES WITH PAVEMENT EDGES. CONDUIT ROUTING SHALL AVOID TREES. SUBMIT CONDUIT AND JUNCTION BOX LAYOUT PLAN TO ENGINEER PRIOR TO INSTALLATION.
2. MAINTAIN AND PROTECT ALL EXISTING UNDERGROUND UTILITIES. CONTRACTOR TO PROVIDE LOCATE PRIOR TO ANY EXCAVATION. PRIOR TO STARTING CONSTRUCTION, CONTRACTOR SHALL CALL "ONE-CALL" FOR UTILITY LOCATIONS.
3. ALL SPARE/EMPTY CONDUIT TO BE PROVIDED WITH NYLON PULL STRINGS.
4. ALL JUNCTION BOXES AND CONDUITS ARE SHOWN IN APPROXIMATE LOCATIONS. VERIFY LOCATION OF PROPERTY LINE, EASEMENTS AND UTILITIES PRIOR TO PLACEMENT.
5. ALL CONDUITS LENGTHS ARE APPROXIMATE.
6. GROUND ALL IN-GROUND JUNCTION BOXES, HAND HOLES, AND PULL BOXES.
7. ELECTRICAL WORK SHALL COMPLY WITH NEC 2026.

KEY NOTES:

1 PROVIDE METER BASE AND TELCOMM BOX AT EACH MODULAR UNIT PER UTILITY REQUIREMENTS. COORDINATE WITH SERVING UTILITY. REFER TO DETAIL 3 ON SHEET E9.

2 UTILITY PROVIDED PAD MOUNT LID AND TRANSFORMER. COORDINATE WITH NORTHWESTERN ENERGY.

3 UTILITY PROVIDED CONDUIT AND CONDUCTORS. COORDINATE WITH NORTHWESTERN ENERGY.

20 0 20 40
SCALE OF FEET

Professional Engineer TIMOTHY L. JANOF 8320 WYOMING

A/E FIRM PRIME: STANTEC CHEYENNE, WY	DESIGNED: JC CADD: BB/PS/AS TECH. REVIEW: JC DATE: 06/12/2026	SUB SHEET NO. E6	TITLE OF SHEET CANYON VILLAGE ELECTRICAL SITE PLAN SHEET 3 OF 3 YELLOWSTONE NATIONAL PARK

DRAWING NO. 101 198433
PMIS / PKG NO. 326141
SHEET 46 OF 94

PLOT DATE: 6/10/2026 2:07 PM USER: SACKETT, ABBY
C:\USERS\ASACKETT\STANTEC\CRONIN, MEGHAN - NPS\YELL\DD\326141A_326104\CADV2022DRAWINGS\CIVIL\NE-CANYONIC_ELECTRICAL.DWG

LEGEND

GROUND

METER

UTILITY TRANSFORMER

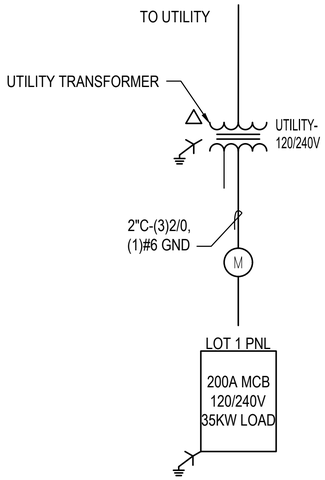

ELECTRICAL LOAD DETAILS - LOT 1

IF ELECTRIC:	# UNITS	LOAD	
BASEBOARD HEAT	1	10	KW
DRYER	1	5	KW
WATER TANK	1	5	KW
RANGE	1	4	KW
SUMP	1	1	KW
GENERAL LIGHTS	1	2	KW
GENERAL RECEPTACLES	1	3	KW
GENERAL APPLIANCES	1	5	KW
TOTAL CONNECTED LOAD		35	KW

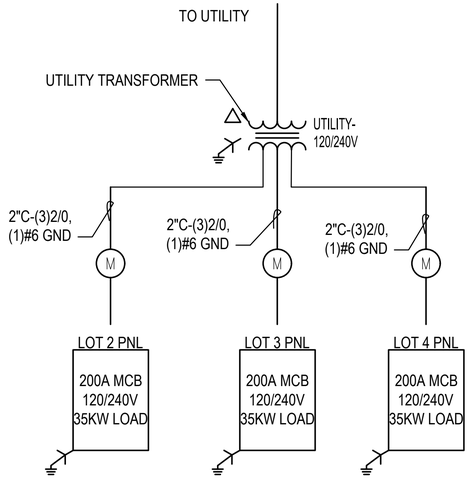

ELECTRICAL LOAD DETAILS - LOTS 2-4

IF ELECTRIC:	# UNITS	LOAD	
BASEBOARD HEAT	1	10	KW
DRYER	1	5	KW
WATER TANK	1	5	KW
RANGE	1	4	KW
SUMP	1	1	KW
GENERAL LIGHTS	1	2	KW
GENERAL RECEPTACLES	1	3	KW
GENERAL APPLIANCES	1	5	KW
TOTAL CONNECTED LOAD		35	KW

Professional Engineer
TIMOTHY L. JANOT
8320
WYOMING

A/E FIRM PRIME: STANTEC CHEYENNE, WY	DESIGNED: JC CADD: BB/PS/AS TECH. REVIEW: JC DATE: 06/12/2026	SUB SHEET NO. E7	TITLE OF SHEET MAMMOTH ELECTRICAL ONE LINE DIAGRAM YELLOWSTONE NATIONAL PARK	DRAWING NO. 101 198433 PMIS / PKG NO. 326141 SHEET 47 OF 94

PLOT DATE: 6/10/2026 2:07 PM USER: SACKETT, ABBY
C:\USERS\ASACKETT\STANTEC\CRONIN, MEGHAN - NPSIYELL\DD\326141A_326104\CADV2022DRAWINGS\CIVIL\MAMMOTH\E3_ELECTRICAL_ONE LINES.DWG

LEGEND

GROUND

METER

UTILITY TRANSFORMER

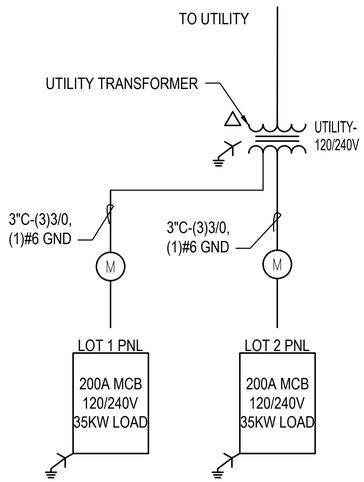

ELECTRICAL LOAD DETAILS - LOT 1

IF ELECTRIC:	# UNITS	LOAD	
BASEBOARD HEAT	1	10	KW
DRYER	1	5	KW
WATER TANK	1	5	KW
RANGE	1	4	KW
SUMP	1	1	KW
GENERAL LIGHTS	1	2	KW
GENERAL RECEPTACLES	1	3	KW
GENERAL APPLIANCES	1	5	KW
TOTAL CONNECTED LOAD		35	KW

ELECTRICAL LOAD DETAILS - LOT 2

IF ELECTRIC:	# UNITS	LOAD	
BASEBOARD HEAT	1	10	KW
DRYER	1	5	KW
WATER TANK	1	5	KW
RANGE	1	4	KW
SUMP	1	1	KW
GENERAL LIGHTS	1	2	KW
GENERAL RECEPTACLES	1	3	KW
GENERAL APPLIANCES	1	5	KW
TOTAL CONNECTED LOAD		35	KW

MONTANA
6/18/26
TIMOTHY J. JAMOF
14037PE
LICENSED PROFESSIONAL ENGINEER

A/E FIRM PRIME: STANTEC CHEYENNE, WY	DESIGNED: JC CADD: BB/PS/AS TECH. REVIEW: JC DATE: 06/12/2026	SUB SHEET NO. E8	TITLE OF SHEET NE ENTRANCE ELECTRICAL ONE LINE DIAGRAM YELLOWSTONE NATIONAL PARK	DRAWING NO. 101 198433 PMIS / PKG NO. 326141 SHEET 48 OF 94

PLOT DATE: 6/10/2026 2:07 PM USER: SACKETT, ABBY
C:\USERS\ASACKETT\STANTEC\CRONIN, MEGHAN - NPS\YELL\DD\326141A_326104\CADV2022DRAWINGS\CIVILINE-CANYONIC\CANYON\CANYONIE4_ELECTRICAL_ONE LINES.DWG

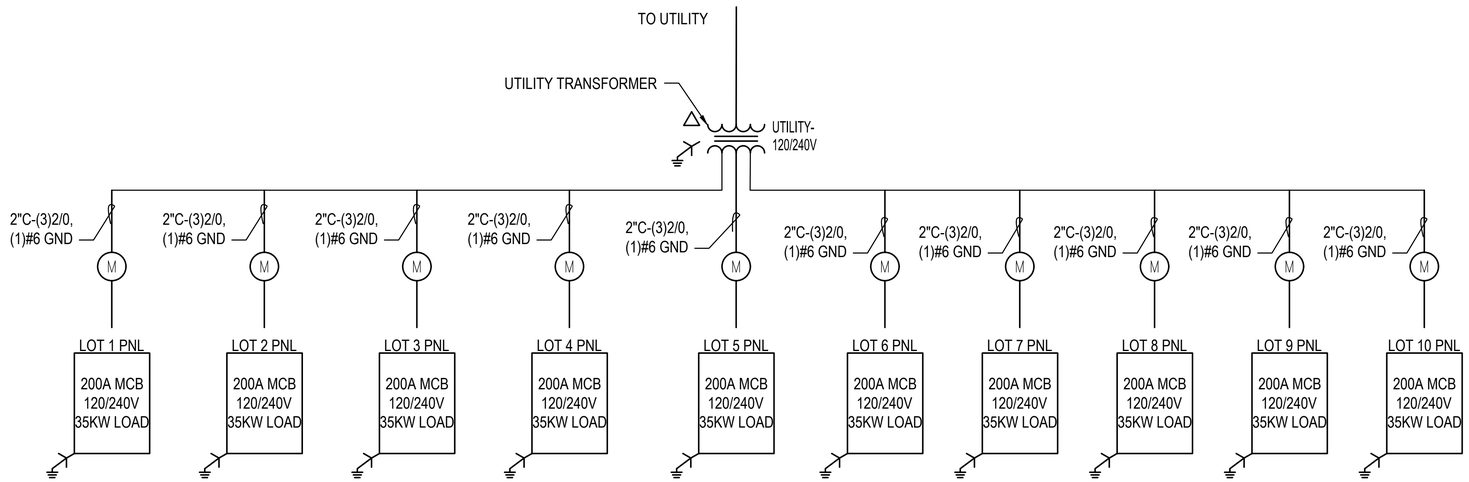

LEGEND

GROUND

METER

UTILITY TRANSFORMER

ELECTRICAL LOAD DETAILS - LOTS 1-10

IF ELECTRIC:	# UNITS	LOAD	
BASEBOARD HEAT	1	10	KW
DRYER	1	5	KW
WATER TANK	1	5	KW
RANGE	1	4	KW
SUMP	1	1	KW
GENERAL LIGHTS	1	2	KW
GENERAL RECEPTACLES	1	3	KW
GENERAL APPLIANCES	1	5	KW
TOTAL CONNECTED LOAD		35	KW

PLOT DATE: 6/10/2026 2:07 PM USER: SACKETT, ABBY
C:\USERS\ASACKETT\STANTEC\CRONIN, MEGHAN - NPS\YELL\DD\326141A_326104\CADV2022DRAWINGS\CIVILINE-CANYONIE4_ELECTRICAL_ONE LINES.DWG

Professional Engineer
TIMOTHY L. JANDT
8320
WYOMING

A/E FIRM PRIME: STANTEC CHEYENNE, WY	DESIGNED: JC CADD: BB/PS/AS TECH. REVIEW: JC DATE: 06/12/2026	SUB SHEET NO. E9	TITLE OF SHEET CANYON VILLAGE ELECTRICAL ONE LINE DIAGRAM YELLOWSTONE NATIONAL PARK	DRAWING NO. 101 198433 PMIS / PKG NO. 326141 SHEET 49 OF 94

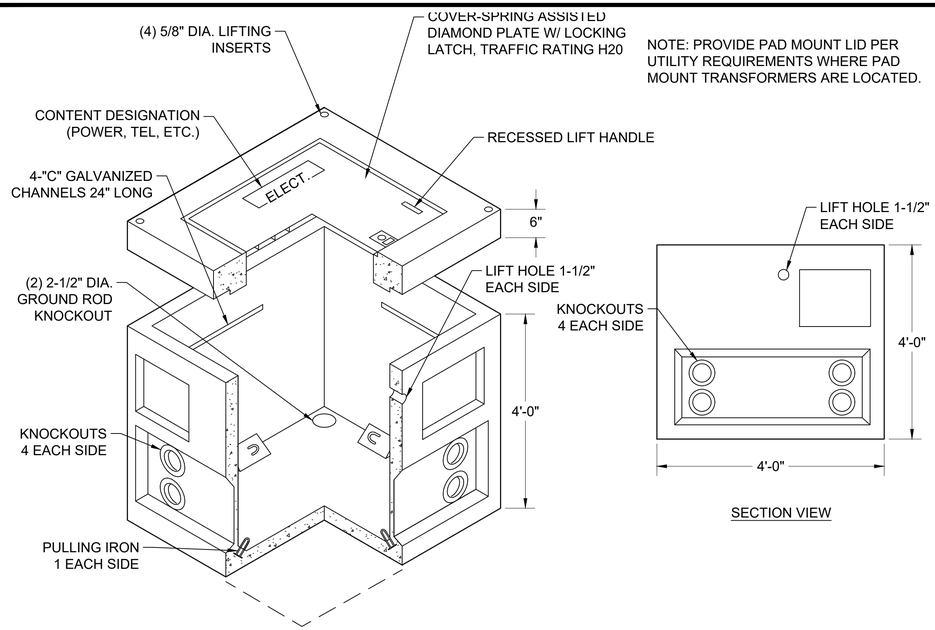

1 E10 PRIMARY PULLING/PAD MOUNT TRANSFORMER VAULT
NOT TO SCALE

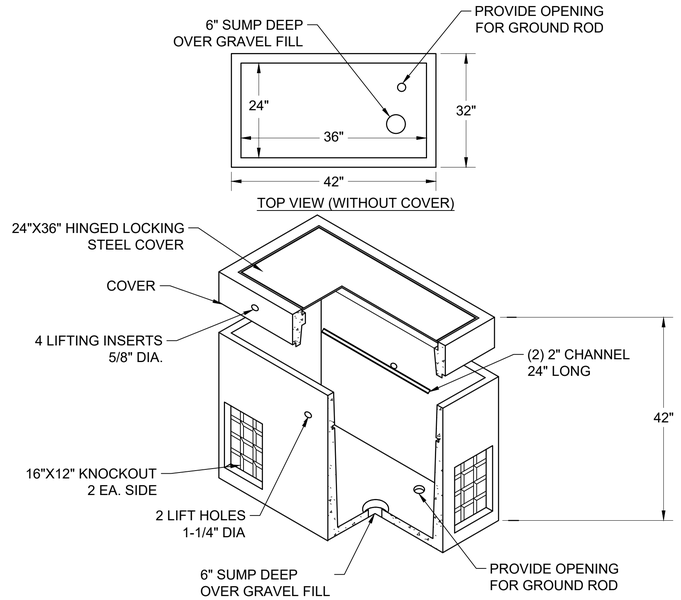

2 E10 COMMUNICATIONS VAULT
NOT TO SCALE

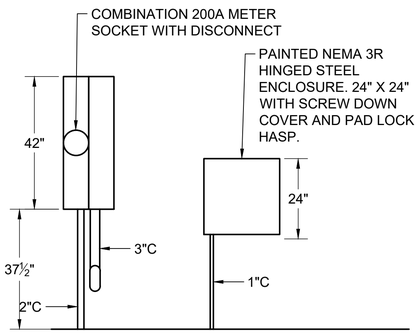

3 E10 POWER METER AND TELECOM BOX
NOT TO SCALE

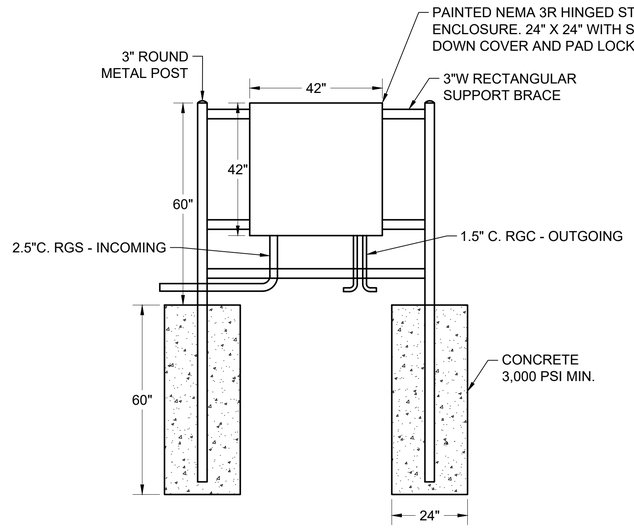

4 E10 COMMUNICATIONS BACKBOARD
NOT TO SCALE

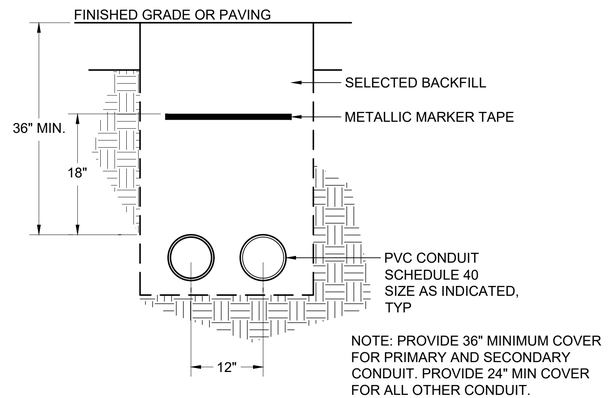

5 E10 DRY UTILITY TRENCH
NOT TO SCALE

MONTANA 6/18/26 TIMOTHY L JANOF 14037PE LICENSED PROFESSIONAL ENGINEER

Professional Engineer TIMOTHY L. JANOF 8320 WYOMING Date 6/18/26

A/E FIRM PRIME: STANTEC CHEYENNE, WY	DESIGNED: JC CADD: BB/PS/AS TECH. REVIEW: JC DATE: 06/12/2026	SUB SHEET NO. E10	TITLE OF SHEET ELECTRICAL AND TELECOM DETAILS YELLOWSTONE NATIONAL PARK	DRAWING NO. 101 198433 PMIS / PKG NO. 326141 SHEET 50 OF 94

PLOT DATE: 6/10/2026 2:08 PM USER: SACKETT, ABBY
C:\USERS\ASACKETT\STANTEC\CRONIN, MEGHAN - NPS\YELL\DD\326141A_326104\CADV2022DRAWINGS\CIVIL\NE-CANYONIC7.01_DETAILS_1.DWG