US Army Corps
of Engineers
Louisville District

Solicitation For

DSSC DLA Repair Building 27
Columbus, OH

P2: 519087

Design-Bid-Build

Specifications - Vol 1 of 2(Div 00 - 12)
Certified Final Design

06 August 2026
W912QR26BA021

RRS-A: 200A Disposition: Maintain for 15 yrs after construction.

P2# 519087 - DSSC DLA Repair Building 27
Columbus, OH

PROJECT SPECIFICATIONS



Divisions covered by this seal
00
01
02
04
06
07
08
09
10
12

Architectural
Ernesto Egoavil, R.A.
DLR Group



Divisions covered by this seal
22
23

Mechanical, Plumbing
Michael Nickoson, P.E.
CMTA



Divisions covered by this seal
03
05

Structural
Ryan Robley, P.E.
DLR Group



Divisions covered by this seal
26
28
33

Electrical
Jeff Evers, P.E.
CMTA

P2# 519087 - DSSC DLA Repair Building 27
Columbus, OH

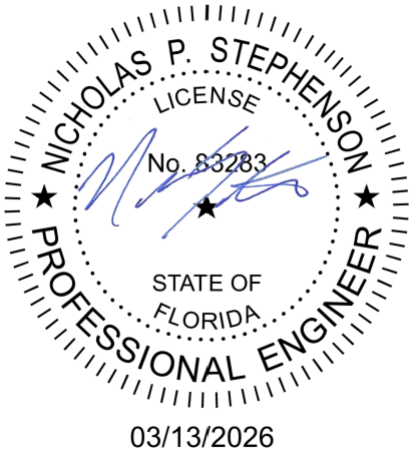

Divisions covered by this seal
21

Fire Protection
Nicholas Stephenson
MES Group Inc.

P2# 519087 - DSSC DLA Repair Building 27
Columbus, OH

PROJECT TABLE OF CONTENTS

DIVISION 00 - PROCUREMENT AND CONTRACTING REQUIREMENTS

00 80 00.00 06	04/21, CHG 1: 06/23	SPECIAL PROVISIONS

DIVISION 01 - GENERAL REQUIREMENTS

01 11 00	02/24	SUMMARY OF WORK
01 32 01.00 06	10/23	PROJECT SCHEDULE
01 33 00	08/18, CHG 4: 02/21	SUBMITTAL PROCEDURES
01 35 26.00 06		GOVERNMENT SAFETY REQUIREMENTS
01 42 00	05/24	SOURCES FOR REFERENCE PUBLICATIONS
01 45 00.15 10	11/23	RESIDENT MANAGEMENT SYSTEM CONTRACTOR MODE (RMS CM)
01 45 04.10 06	05/25	CONTRACTOR QUALITY CONTROL
01 45 35	05/24	SPECIAL INSPECTIONS
01 50 00	11/20, CHG 3: 08/24	TEMPORARY CONSTRUCTION FACILITIES AND CONTROLS
01 57 19.00 06	04/20	TEMPORARY ENVIRONMENTAL CONTROLS AND PERMITS
01 74 19	02/19, CHG 3: 11/21	CONSTRUCTION WASTE MANAGEMENT AND DISPOSAL
01 78 23	05/23, CHG 1: 05/25	OPERATION AND MAINTENANCE DATA
01 91 00.15	05/23, CHG 3: 08/24	BUILDING COMMISSIONING

DIVISION 02 - EXISTING CONDITIONS

02 41 00	08/22	DEMOLITION AND DECONSTRUCTION
02 82 00	11/18, CHG 1: 11/19	ASBESTOS REMEDIATION
02 83 00	11/18	LEAD REMEDIATION
02 84 16	11/22	HANDLING OF LIGHTING BALLASTS AND LAMPS CONTAINING PCBs AND MERCURY

DIVISION 03 - CONCRETE

03 30 00	02/19, CHG 9: 08/24	CAST-IN-PLACE CONCRETE

DIVISION 04 - MASONRY

04 20 00	11/15, CHG 2: 05/19	UNIT MASONRY

DIVISION 05 - METALS

05 05 20	05/22, CHG 1: 08/24	POST-INSTALLED CONCRETE AND MASONRY ANCHORS
05 05 23.16	08/18	STRUCTURAL WELDING
05 50 13	08/24	MISCELLANEOUS METAL FABRICATIONS
05 50 14	08/18	STRUCTURAL METAL FABRICATIONS
05 52 00	08/23	METAL RAILINGS

DIVISION 06 - WOOD, PLASTICS, AND COMPOSITES

06 10 00	08/16, CHG 2: 11/18	ROUGH CARPENTRY
06 61 16	08/20	SOLID SURFACING FABRICATIONS

DIVISION 07 - THERMAL AND MOISTURE PROTECTION

07 24 00	08/23	EXTERIOR INSULATION AND FINISH SYSTEMS

07 27 19.01	08/23, CHG 1: 08/24	SELF-ADHERING AIR BARRIERS
07 27 26	08/23	FLUID-APPLIED MEMBRANE AIR BARRIERS
07 60 00	08/23	FLASHING AND SHEET METAL
07 92 00	08/23	JOINT SEALANTS

DIVISION 08 - OPENINGS

08 11 13	08/20	STEEL DOORS AND FRAMES
08 11 16	05/17, CHG 2: 11/18	ALUMINUM DOORS AND FRAMES
08 33 23	08/20, CHG 1: 02/22	OVERHEAD COILING DOORS
08 41 13	08/18, CHG 1: 08/18	ALUMINUM-FRAMED ENTRANCES AND STOREFRONTS
08 51 13	05/19	ALUMINUM WINDOWS
08 71 00	02/16, CHG 4: 02/22	DOOR HARDWARE
08 81 00	05/19	GLAZING

DIVISION 09 - FINISHES

09 06 00	08/22	SCHEDULES FOR FINISHES
09 29 00	08/24	GYPSUM BOARD
09 30 10	08/20	CERAMIC, QUARRY, AND GLASS TILING
09 51 00	08/20	ACOUSTICAL CEILINGS
09 65 00	11/24	RESILIENT FLOORING
09 68 00	11/24	CARPETING
09 90 00	02/21	PAINTS AND COATINGS

DIVISION 10 - SPECIALTIES

10 14 00.20	08/20	INTERIOR SIGNAGE
10 26 00	08/20	WALL AND DOOR PROTECTION
10 28 13	08/20	TOILET ACCESSORIES
10 51 13	08/24	LOCKERS

DIVISION 12 - FURNISHINGS

12 00 01.00 20	02/23	FURNITURE, FIXTURES AND EQUIPMENT (FF&E) PACKAGE
12 50 00.13 10	08/17, CHG 1: 11/18	FURNITURE AND FURNITURE INSTALLATION

DIVISION 21 - FIRE SUPPRESSION

21 13 13	08/20	WET PIPE SPRINKLER SYSTEMS, FIRE PROTECTION

DIVISION 22 - PLUMBING

22 00 00	05/24, CHG 1: 11/24	PLUMBING, GENERAL PURPOSE

DIVISION 23 - HEATING, VENTILATING, AND AIR CONDITIONING (HVAC)

23 03 00.00 20	08/10, CHG 3: 08/18	BASIC MECHANICAL MATERIALS AND METHODS
23 05 15	05/22, CHG 2: 08/24	COMMON PIPING FOR HVAC
23 05 48.19	02/25	SEISMIC BRACING FOR MECHANICAL SYSTEMS
23 05 93	05/25	TESTING, ADJUSTING, AND BALANCING FOR HVAC
23 07 00	08/24	THERMAL INSULATION FOR MECHANICAL SYSTEMS
23 08 00	05/23, CHG 1: 08/24	COMMISSIONING OF MECHANICAL AND PLUMBING SYSTEMS

23 09 00	08/24, CHG 1: 08/25	INSTRUMENTATION AND CONTROL FOR HVAC
23 09 13	11/15, CHG 2: 05/21	INSTRUMENTATION AND CONTROL DEVICES FOR HVAC
23 09 23.02	08/24	BACNET DIRECT DIGITAL CONTROL FOR HVAC AND OTHER BUILDING CONTROL SYSTEMS
23 09 53.00 20	02/10, CHG 3: 08/24	SPACE TEMPERATURE CONTROL SYSTEMS
23 09 93	11/15	SEQUENCES OF OPERATION FOR HVAC CONTROL
23 21 23	05/25	HYDRONIC PUMPS
23 30 00	02/25	HVAC AIR DISTRIBUTION
23 36 00.00 40	08/22	AIR TERMINAL UNITS
23 37 13.00 40	08/22	DIFFUSERS, REGISTERS, AND GRILLES
23 57 10.00 10	11/19	FORCED HOT WATER HEATING SYSTEMS USING WATER AND STEAM HEAT EXCHANGERS
23 64 10	05/25	WATER CHILLERS, VAPOR COMPRESSION TYPE
23 64 26	08/09, CHG 7: 02/24	CHILLED, CHILLED-HOT, AND CONDENSER WATER PIPING SYSTEMS

DIVISION 25 - INTEGRATED AUTOMATION

25 05 11.01	08/24	CYBERSECURITY FOR LOW IMPACT HEATING, VENTILATION AND AIR CONDITIONING (HVAC) FACILITY-RELATED CONTROL SYSTEMS
25 05 11.02	08/24	CYBERSECURITY FOR LOW IMPACT LIGHTING CONTROL SYSTEM (LCS) FACILITY-RELATED CONTROL SYSTEMS

DIVISION 26 - ELECTRICAL

26 05 13	08/25	MEDIUM-VOLTAGE CABLES
26 05 48	11/23	SEISMIC PROTECTION FOR ELECTRICAL EQUIPMENT
26 05 73	08/23	POWER SYSTEM STUDIES
26 08 00	11/22	APPARATUS INSPECTION AND TESTING
26 12 19	05/24	PAD-MOUNTED, LIQUID-FILLED, MEDIUM-VOLTAGE TRANSFORMERS
26 20 00	05/25	INTERIOR DISTRIBUTION SYSTEM
26 29 23	02/20, CHG 1: 05/21	ADJUSTABLE SPEED DRIVE (ASD) SYSTEMS UNDER 600 VOLTS
26 51 00	05/20, CHG 2: 11/21	INTERIOR LIGHTING

DIVISION 28 - ELECTRONIC SAFETY AND SECURITY

28 31 76	08/20	INTERIOR FIRE ALARM AND MASS NOTIFICATION SYSTEM, ADDRESSABLE

DIVISION 33 - UTILITIES

33 71 01	05/19, CHG 1: 11/19	OVERHEAD TRANSMISSION AND DISTRIBUTION

-- End of Project Table of Contents --

P2# 519087 DLA Repair Building 27
Defense Supply Center Columbus; Columbus OH
SECTION 00 10 00 – SOLICITATION CONTRACT FORM

SECTION 00 10 00 – SOLICITATION CONTRACT FORM

PRICE BREAKOUT SCHEDULE

OFFERERS NAME: _____

CONTRACT LINE-ITEM SCHEDUE

ITEM/CLIN NUMBER	DESCRIPTION	UNIT	AMOUNT
BASE PROPOSAL			
0001	1. ALL WORK, LABOR, MATERIALS, AND SUPERVISION REQUIRED TO CONSTRUCT THE REPAIRS TO BUILDING 27 AS DESCRIBED IN THE CONTRACT DRAWINGS AND SPECIFICATIONS	JOB	**$**_____
0002	2. ALL WORK, LABOR, MATERIALS, AND SUPERVISION REQUIRED TO REPLACE THE TWO EXISTING TRANSFORMERS AND ASSOCIATED INFRASTRUCTURE AS DESCRIBED IN THE PROJECT DRAWINGS AND SPECIFICATIONS.	JOB	**$**_____
		TOTAL BASE PROPOSAL	**$**_____

OPTIONS PROPOSALS

0003	**OPTION 1:** ALL WORK, LABOR,MATERIALS, AND SUPERVISION REQUIRED TO REMOVE CONDUIT and CONDUCTORS BACK TO SOURCE. MARK BREAKERS AS SPARE. PATCH AND PAINT AS REQUIRED. PROVIDE COSTS FOR A QUANTITY OF 100 LF ($/LF) THAT CAN BE EXERCISED TWENTY (20) TIMES. SEE NOTE NO. 4	$/100LF	**$**_____
		JOB/CLIN SUBTOTAL(X20)	**$**_____
0004	**OPTION 2:** ALL WORK, LABOR,MATERIALS, AND SUPERVISION REQUIRED TO PROVIDE ABATEMENT OF FLOORING CONTAINING ACM AS INDICATED IN SECTION 02 82 00 ASBESTOS REMEDIATION. PROVIDE COSTS FOR A QUANTITY OF 100 SF ($/SF) THAT CAN BE EXERCISED TWENTY (20) TIMES. SEE NOTE NO. 4	$/100SF	**$**_____
		JOB/CLIN SUBTOTAL(x20)	**$**_____

TOTAL OPTIONS **$**_____

TOTAL BASE PLUS ALL OPTIONS **$**_____

P2# 519087 DLA Repair Building 27
Defense Supply Center Columbus; Columbus OH

NOTES FOR CONTRACT LINE ITEM (CLIN) SCHEDULE

NOTE NO. 1: TO BETTER FACILITATE THE RECEIPT AND PROPOSAL PROCESS, ALL MODIFICATIONS TO PROPOSALS ARE TO BE SUBMITTED ON COPIES OF THE LATEST CONTRACT LINE ITEM (CLIN) SCHEDULES AS PUBLISHED IN THE SOLICITATION OR THE LATEST AMENDMENT THERETO. IN LIEU OF INDICATING ADDITIONS/DEDUCTIONS TO LINE ITEMS, ALL OFFERORS SHOULD STATE THEIR REVISED PRICES FOR EACH ITEM.

NOTE NO. 2: OFFERORS MUST INSERT A PRICE ON ALL NUMBERED ITEMS [INCLUDING OPTIONS] OF THE CLIN SCHEDULE. FAILURE TO DO SO MAY RESULT IN THE OFFER BEING UNACCEPTABLE.

NOTE NO. 3: THE OFFEROR'S BASE BID AND ALL OPTIONS WILL BE EVALUATED FOR LOWEST COST TO THE GOVERNMENT. THE BASIS FOR AWARD IS THE TRADE-OFF PROCESS. IN ACCORDANCE WITH 52.217-5, EVALUATION OF OPTIONS, THE GOVERNMENT WILL EVALUATE OFFERS FOR AWARD PURPOSES BY ADDING THE TOTAL PRICE FOR ALL OPTIONS TO THE TOTAL PRICE FOR THE BASIC REQUIREMENT. EVALUATION OF OPTIONS WILL NOT OBLIGATE THE GOVERNMENT TO EXERCISE THE OPTION(S).

NOTE NO. 4: OPTIONS (0001 and 0002) MAY BE EXERCISED WITHIN 14 MONTHS FROM NOTICE-TO-PROCEED.

-- END OF CLIN SCHEDULE --

P2# 519087 - DSSC DLA Repair Building 27
Columbus, OH

SECTION 00 80 00.00 06

SPECIAL PROVISIONS
04/21, CHG 1: 06/23

PART 1 GENERAL

Attachments to this specification are as follows:

Construction Project Sign Details
Project Submittal Register

1.1 REFERENCES

The publications listed below form a part of this specification to the extent referenced. The publications are referred to within the text by the basic designation only.

U.S. ARMY CORPS OF ENGINEERS (USACE)

EM 385-1-1	(2024) Safety -- Safety and Health Requirements Manual
ERDC/ITL TR-12-1	(2015) A/E/C Graphics Standard, Release 2.0

U.S. NATIONAL ARCHIVES AND RECORDS ADMINISTRATION (NARA)

29 CFR 1926.59	Hazard Communication

1.2 SUBMITTALS

Government approval/acceptance is required for submittals with a "G" designation; submittals not having a "G" designation are for information only. When used, a designation following the "G" designation identifies the office that will review the submittal for the Government. The following shall be submitted in accordance with Section 01 33 00.00 06 SUBMITTAL PROCEDURES:

SD-01 Preconstruction Submittals

SD-02 Shop Drawings

Mechanical/Electrical Room Layout; G

SD-04 Samples

Equipment Warranty Identification Tags; G

SD-05 Design Data

SF1413 Statement And Acknowledgement

Progress Photographs;

SD-07 Certificates

Warranty of Construction;

NO ASBESTOS - CONTAINING MATERIAL (ACM) CERTIFICATION; G

Insurance;

Sales and Use Tax;

SD-11 Closeout Submittals

Preliminary (Working) As-Built Drawings; G

Final As-Built Drawings; G

CAD Working As-Built Drawings; G

Equipment-in-Place List;

Maintenance and Parts Data;

Warranty Management Plan; G

1.3 COMMENCEMENT, PROSECUTION AND COMPLETION OF WORK

a. Refer to clause 52.211-12 "LIQUIDATED DAMAGES" in Section 00 70 00 for the amount of Liquidated Damages for the project.

b. Refer to clause 52.211-10 "Commencement, Prosecution, and Completion of Work" in Section 00 70 00 for a notification of significant contract dates.

c. After approval of the required bonds, the Government will issue an Administrative Notice-to-Proceed (NTP) to allow for preconstruction activities to be initiated in accordance with the contract requirements. The contract period of performance specified in Contract Clause 52.211-10 will begin upon issuance of Administrative NTP. No physical onsite work will be permitted during the Administrative NTP period. All required preconstruction activities and submittals must be submitted and accepted by the Government, where applicable, within the Administrative NTP period of 45 days. The Government will issue a Construction NTP to allow commencement of all other contract work after the Administrative NTP period, or after the contractor's completion of all work specified in the Administrative NTP. Failure to complete all required preconstruction activities may result in the contract being terminated for default in accordance with Contract Clause 52.249-10 Default (Fixed-Price Construction).

1.3.1 NOT USED

1.4 NOT USED

1.5 NOT USED

1.6 CONTRACT DRAWINGS AND SPECIFICATIONS

In addition to DFARS 252.236-7001 "Contract Drawings and Specifications"

in Section 00 70 00 the following will apply:

a. After Award or no later than Notice to Proceed (NTP), the Government will furnish the Contractor a compact disk containing all technical contract documents in electronic media only. This disk will include a complete set of drawing files and technical specification files which have all amendments included. The disk will contain drawing files in PDF format along with technical specifications in PDF format. These PDF files are the contract documents that represent the construction requirements of the contract, and are being provided for the Contractor's use in printing paper copies of contract documents.

b. In addition, native CAD files(this includes, but not limited to, all source files, models, custom fonts and linestyles, plot files, and images used to create the contract drawings) are provided in accordance with the "AS-BUILT DOCUMENTS" paragraph for the Contractor's use in maintaining and preparing as-built plans. If another CAD Program is used other than the Using Agency's System, all native CAD files that were generated with that software and all support files will also be included. Only native files are to be used for As-Built preparation and information.

c. Native files are to be used for As-Built preparation only. The PDF files are the contract documents that represent the construction requirements of the contract.

1.7 AS-BUILT DOCUMENTS FOR DESIGN BID BUILD PROJECTS

1.7.1 General

This section covers the completion of final as-built drawings, as a requirement of the contract. The Contractor is responsible for maintaining paper copy working as-built drawings during the construction phase. These paper copy drawings will be used by the Contractor to prepare, maintain and submit the final as-built drawings.

1.7.1.1 As-Built Drawings

An as-built drawing is a contract construction drawing revised to reflect the final as-built conditions of the project because of modifications, changes, corrections to the project design required during construction, submittals and extensions of design. The terms "drawings," "contract drawings," "drawing files," "working as-built drawings" and "final as-built drawings" refer to contract drawings that are revised to be used for the "RECORD DRAWING AS-BUILTS".

1.7.1.2 Government-Furnished Files

a. The Contractor will be provided electronic files at the beginning of construction for use during the construction phase which are to be maintained during construction for the preparation of as-builts. The Contractor shall be responsible to print two full size paper copies. The Contractor shall enter changes and corrections on two sets of paper full size construction plans on a weekly basis in accordance with Paragraph "Maintenance of Working As-Built Drawings" in this section.

b. The Contractor is required to prepare final as-built drawings utilizing the native files provided by the Government. If translation

is required, the original design models (BIM or CAD) shall be updated to As-Built conditions and then appropriately translated. Updating translated drawings will not be accepted. The contractor shall update the CAD working as-built drawings, in accordance with paragraph "Maintenance of Working As-Built Drawings", on a quarterly basis and submit them to the COR for independent Government review. Both paper and electronic documents shall be available at all times and shall be provided promptly to the Contracting Officer's Representatives when requested. The Contractor shall be responsible for backup of electronic files during construction and for controlling release of information.

1.7.2 Withholding

Maintenance of working as-builts is considered part of the value of the facilities being constructed and will not be paid for as a separate line item. All costs in conjunction with periodic as-built maintenance and final preparation shall be considered a subsidiary obligation of the Contractor.

1.7.2.1 Failure to Maintain

If the Contractor fails to maintain the working as-built drawings as specified herein, the Contracting Officer will deduct from the monthly progress payment an amount up to 10% or which, in the Contracting Officer's judgment, represents the estimated cost of bringing the as-built documents up to date. This monthly deduction will continue until an agreement can be reached between the Contracting Officer and the Contractor regarding the accuracy and completeness of working as-built documents. This includes conversion of submittals and other miscellaneous documents.

1.7.2.2 As-Builts Prepared by Contractor

The Contractor is required to prepare and provide final as-built drawings. The Contractor shall include an activity in the cost-loaded schedule for the final As-Built drawing submittal in the amount defined in the following paragraph. See Section 01 32 01.00 06, PROJECT SCHEDULE, para "Basis for Payment and Cost Loading". This amount shall be withheld and not paid until the final As-Built drawing submittal has been accepted by the Government.

Withholding for the final as-built drawing submittal shall be in the amount of: 1% for contract awards less than $5,000,000; $50,000 for contracts awarded from $5,000,000 to $10,000,000; or $100,000 for contracts awarded greater than $10,000,000. Withholding shall be withheld until the final as-built drawing submittal has been approved and accepted by the Government.

1.7.3 Maintenance of Working As-Built Drawings

The Contractor shall revise two (2) sets of paper drawings by red-line process to show the as-built conditions during the prosecution of the project. These as-built marked drawings shall be kept current on a weekly basis and available on the jobsite at all times. Changes in the work from the contract or additional information which is uncovered in the course of construction shall be accurately and neatly recorded as they occur by

means of details and notes. Changes must be reflected on all sheets that the change affects. The working as-built marked drawings will be jointly reviewed for accuracy and completeness by the Contracting Officer and the Contractor before submission of each monthly pay estimate. The working as-built drawings shall show the following information if applicable to the project, but not be limited thereto:

a. The actual location, kinds and sizes of all sub-surface utility lines. In order that the location of these lines and appurtenances may be determined in the event the surface openings or indicators become covered over or obscured, the as-built drawings shall show, by offset dimensions to two permanently fixed surface features, the end of each run including each change in direction. Valves, splice boxes and similar appurtenances shall be located by dimensioning along the utility run from a reference point. The average depth below the surface of each run shall also be recorded.

b. The location and dimensions of any changes within the building structure.

c. The correct alignments, grade elevations, typical cross section, earthwork, structures or utilities if any changes were made from contract plans.

d. Additional as-built information that exceeds the detail shown on the Contract Drawings. These as-built conditions include those that reflect structural details, fabrication, erection, installation plans and placing details, pipe sizes, insulation material, dimensions of equipment foundations and layouts, equipment, sizes, mechanical and electrical room layouts and other extensions of design, that were not shown in the original contract documents because the exact details were not known until after the time of approved shop drawings. It is recognized that the shop drawing submittals (revised showing as-built conditions) will serve as the as-built record without actual incorporation into the contract drawings. The final as-built construction drawing shall reference the shop drawing file that includes the as-built information. In turn, the shop drawing shall reference the applicable construction as-built drawing. All such shop drawing submittals must include the paper copy and PDF of the drawings.

e. The invert elevations and grades of any drainage structures or ditches installed or affected as part of the project construction.

f. Changes or modifications which result from the final inspection.

h. Where contract drawings present options, only the option selected for construction shall be shown on the final as-built drawings.

i. Systems designed or enhanced by the Contractor, such as HVAC controls, fire alarms, fire sprinklers, fire protection, fire detection and irrigation systems and other related systems in this project, shall be incorporated into the as-built drawings to include detailed information for all aspects of the systems including wiring, piping, and equipment drawings.

j. Room numbers shown on the contract drawings are selected for design convenience and may not represent the actual numbers intended for use by the end user. Final as-built drawings shall reflect actual room numbers adopted by the end user.

k. Contract modification (change order price) shall include the Contractor's cost to change working and final as-built drawings to reflect modifications and compliance with the following procedures (See "Markings and Indicators"):

(1) Directions in the modification for posting descriptive changes shall be followed.

(2) A Revision Triangle shall be placed at the location of each deletion.

(3) For new details or sections which are added to a drawing, a Revision Triangle shall be placed by the detail or section title.

(4) For minor changes, a Revision Triangle shall be placed by the area changed on the drawing (each location).

(5) For major changes to a drawing, a Revision Triangle shall be placed by the title of the affected plan, section, or detail at each location.

(6) For changes to schedules or drawings, a Revision Triangle shall be placed either by the schedule heading or by the change in the schedule.

1.7.4 Preliminary (Working) As-Built Drawings

Six (6) weeks before Contract Completion Date, the Contractor shall submit one (1) set of the original paper working as-built drawings to the Contracting Officer for review and approval. These working as-built marked drawings shall be neat, legible and accurate. The review by Government personnel will be expedited to the maximum extent possible. If upon review, the working as-built drawings are found to contain errors and/or omissions, they will be returned to the Contractor for corrections. The Contractor shall complete the corrections and return the working as-built marked drawings to the Contracting Officer within fourteen (14) calendar days. Upon approval, the working as-built drawings will be returned to the Contractor for use in preparation of final as-built drawings.

1.7.5 Preparation of Final As-Built Drawings

The contract drawings shall be modified as may be necessary to correctly show the features of the project as it has been constructed by bringing the contract drawings into agreement with approved working as-built drawings, adding such additional drawings as may be necessary.

These final as-built drawings are part of the permanent records of the project and the Contractor shall be responsible for the protection and safety thereof until returned to the Contracting Officer. Any drawings damaged or lost by the Contractor shall be satisfactorily replaced by the Contractor at no expense to the Government.

When BIM models are a part of the as-built process, the models shall be provided to the Government as a part of the Final As-Built submittal for a review to verify the correctness of the as-built markups and confirm that all changes have been incorporated into the models. Should errors be determined, the contractor shall update the files and provide a corrected set of files within fourteen (14) calendar days of receipt of comments. An

independent Government review, by the Louisville district As-Built Coordinator (CELRL-CDM-Q), will be made on the accepted files to determine compliance to the As-Built requirements and to verify graphics changes were done properly. This review will require the electronic model files, all the files needed to reproduce the contract drawings, a full size set of contract drawings in PDF format and all the shop drawings in PDF format, a scanned set of the paper markups and the paper markups. Upon receipt of any comments from this independent review, the contractor shall update the electronic model files and provide a corrected set of files within fourteen (14) calendar days of receipt of the comments.

In the event the Contractor accomplishes additional work which changes the as-built conditions of the facility, after submission and approval of the working as-built drawings, the Contractor shall be responsible for the addition of these changes to the working as-built drawings and also to the final as-built documents and electronic models.

1.7.6 Markings and Indicators

Changes shall be annotated in accordance with ERDC/ITL TR-12-1 "A/E/C Graphics Standard_Release 2.0" at the following locations:

a. Bottom of the revised detail.
b. Right hand and bottom border aligned with the revised detail.
c. The revision block of the title block.

Separate markings shall be made for each modification negotiated into the contract.

1.7.7 Preparation of Other As-Built Documents

All other non-electronic documents which may include, for example, design analysis, catalog cuts, or certification documents that are not available in native electronic format shall be scanned and provided in an organized manner in Adobe PDF format.

1.7.8 Submittal of Final As-Built Documents

Within fourteen (14) calendar days of Final Acceptance meeting of the project, Final As-Built documents shall be provided to the Contracting Officer in the formats described in paragraph "Electronic File Use". The final as-built document submittal shall also include the approved preliminary paper working as-built drawings.

1.7.9 Partial Occupancy

For projects where portions of construction are to be occupied or activated before overall project completion, including portions of utility systems, as-built drawings for those portions of the facility being occupied or activated shall be supplied at the time the facility is occupied or activated. This same as-built information previously furnished must also be shown on the final set of as-built drawings at project completion.

1.7.10 Electronic File Use

Only personnel proficient in the use of the specific BIM software product

shall be employed to modify the models or prepare additional new drawings. Additions and corrections to the models shall be equal in quality to that of the originals. Line work, line weights, lettering, layering conventions, and symbols shall be the same as the original line work, line weights, lettering, layering conventions, and symbols. If additional models or drawings are required, they shall be prepared using the specified electronic file format applying the same guidance specified for original drawings. Three dimensional (3D) elements shall be placed in files in their proper locations when using 3D files with spatially correct elements. If the Government provided electronic files in a different format than that requested by the Using Agency, those files will be used for as-built purposes and then translated or exported to format and version required by the Using Agency's. The title block and drawing border to be used for any new final as-built drawings shall be identical to that used on the contract drawings. Additions and corrections to the contract drawings shall be accomplished using CAD media files supplied by the Government. All work by the Contractor shall be accomplished on files in the format in which they are provided. The original electronic files provided by the Government will be provided in a format compatible with the Using Agency's. The Using Agency uses Bentley Systems AECOsim Version 8. The Contractor shall be responsible for providing all program files and hardware necessary to prepare final as-built models. The Contracting Officer will review final as-built models for accuracy and the Contractor shall make all required corrections, changes, additions, and deletions.

a. When final revisions have been completed, the cover sheet drawing shall show the wording "RECORD DRAWING AS-BUILT" followed by the name of the Contractor in letters at least 5 mm 3/16 inch high. All other contract drawings shall be marked in the bottom right-hand corner of each drawing either "AS-BUILT" drawing denoting no revisions on the sheet, or "REVISED AS-BUILT" denoting one or more revisions. As-Built drawings shall be dated with the Contract Completion Date in the revision block.

b. After receipt by the Contractor of the approved working as-built drawings and the original contract drawings files the Contractor shall, within thirty (30) calendar days, make the final as-built submittal. This submittal shall consist of 2 sets of completed final as-built drawings on separate media consisting of both BIM model files, exported CAD models (bothcompatible with the Using Agency's system on electronic storage media identical to that supplied by the Government) and full size set in PDF format and the return of the approved marked up working as-built drawings. They shall be complete in all details and identical in form and function to the contract drawing files supplied by the Government. Any translations or adjustments necessary to accomplish this are the responsibility of the Contractor. The Government reserves the right to reject any files it deems incompatible with the required BIM or CAD software system. All paper drawings, drawing files and storage media submitted will become the property of the Government upon final approval. Failure to submit final as-built drawing files and marked drawings as specified shall be cause for withholding any payment due the Contractor under this contract. Approval and acceptance of final as-built drawings shall be accomplished before final payment is made to the Contractor.

1.8 NOT USED

1.9 EQUIPMENT DATA, O&M, & REPAIR MANUALS WITH FIELD TRAINING REQUIREMENTS

1.9.1 Real Property Equipment

Equipment-in-Place Data

Contractor shall be required to make an Equipment-in-Place list of all installed equipment furnished under this contract. This list shall include all information usually listed on manufacturer's name plate. The Form is part of SPECIAL PROVISIONS and is included following the SPECIAL PROVISIONS, so to positively identify the piece of property. The list shall also include the cost of each piece of installed property F.O.B. construction site. For each of the items which are specified herein to be guaranteed for a specified period from the date of acceptance thereof, the following information shall be given: The name, serial and model number address of equipment supplier, or manufacturer originating the guaranteed item. The information shall also be provided in excel spreadsheet format with columns for above information in addition to floor, space id as listed in the drawings, system, and submittal register id number for the item. The Contractor's guarantee to the Government of these items will not be limited by the terms of any manufacturer's guarantee to the Contractor. Furnish the list as one (1) reproducible and three (3) copies, and in electronic format on CD to the Contracting Officer thirty (30) calendar days before completion of any segment of the contract work which has an incremental completion date.

Maintenance and Parts Data
The Contractor will be required to furnish a brochure, catalog cut, parts list, manufacturer's data sheet or other publication which will show detailed parts data on all other equipment subject to repair and maintenance procedures not otherwise required in Operations and Maintenance Manuals specified elsewhere in this contract. This information shall be provided electronically in PDF format with bookmarks for each piece of equipment with file name included in a separate column or linked worksheet in the equipment data excel spreadsheet as described in the paragraph above. Distribution of directives shall follow the same requirements as listed in paragraph above.

1.9.2 O&M and Repair Manuals

Withholding & Copies

The Contractor shall provide 6 electronic format copies on CD of the Equipment Operating, Maintenance, and Repair Manuals and two complete hardcopies; these requirements shall apply even through the Technical Specification section indicates otherwise. The manuals shall be prepared electronically in PDF format containing bookmarks for each table of contents item. The PDF file shall be referenced in a separate column or linked worksheet in the equipment data excel spreadsheet as described previously. Separate manuals shall be provided for each utility system as defined per the Technical Specification. Operations and Maintenance manuals shall be accepted/approved before field training or ninety (90) calendar days before substantial completion (whichever occurs earlier). An amount of $20,000 shall be withheld until submittal and acceptance/approval of O&M manuals is complete. A draft outline and table

of contents shall be submitted for acceptance/approval at 50% contract completion. See paragraph "EQUIPMENT DATA, O&M, & REPAIR MANUALS WITH FIELD TRAINING REQUIREMENTS" for detail O&M and Repair Manual format.

1.9.3 Field Training

1.9.3.1 Training Course

Contractor shall conduct a training course for the operating staff for each particular component and system. Where the training period is not identified by the technical specification, a minimum of 1 hour of training shall be provided for that component or system. Training shall only occur after the Manuals have been approved/ accepted by the Government and during normal working time, and shall start after the system or component is functionally completed. The field instructions shall cover all of the items contained in the Equipment Operating, Maintenance and Repair Manuals as identified per individual Technical Specifications. The training will include both classroom and "hands-on" training. The Contractor shall submit a lesson plan outlining the information to be discussed during training periods. This lesson plan will be submitted ninety (90) calendar days before contract completion and accepted/approved before the field training occurs. Training shall be documented by the Contractor and a list of attendees shall be furnished to the Government. Training audio/ video shall be digitally recorded on CDs or DVDs and shall be furnished to the Government within ten (10) calendar days following training.

1.9.3.2 Not Used

1.9.3.3 Not Used

1.9.3.4 Organization of O&M Manuals

Assemble O&M data into a series of electronically indexed files using the current version of Adobe Acrobat or similar software capable of producing PDF file format. Organize the files in numerical sequence corresponding to the individual sections within the construction contract specifications.

a. Provide one individual PDF file containing a table of contents for the entire O&M manual, corresponding to the table of contents for the contract specifications.

b. Provide one individual PDF file for each two-digit numbered division in the contract specifications (e.g., one file for Division 03 Concrete, a separate file for Division 04 Masonry, etc.). At the front of each two-digit numbered division file, provide a table of contents listing each separate specification section within the Division, electronically bookmarked to the first page of O&M data for each section. Arrange PDF pages in sequence according to their specification section number. Include manufacturer's datasheets, operating instructions, and maintenance instructions. Include copies of final test reports, final commissioning reports, final certification reports, installer's instructions for the operator/user, or similar documents supplementing the manufacturer's information. Where manufacturer's datasheets describe multiple products or versions
SECTION 01 31 20 Page 13
of products, mark the datasheets to clearly indicate the exact product or version provided. Indicate model name, number, configuration,

color or style name, optional features selected, etc., as applicable.

c. Use PDF files obtained directly from the manufacturer wherever applicable. Where PDF files must be locally produced, produce such files by direct electronic conversion from the electronic native files wherever applicable. PDF files may be produced by scanning hard copy documents only when electronic originals are not available; notify the Contracting Officer's representative of any such cases, and perform optical character recognition processing on the resulting scanned documents.

d. Ensure all PDF files are searchable and legible when viewed on computer monitor. Orient each PDF page such that the predominant information is displayed horizontally on a computer monitor, regardless of "portrait" vs "landscape" format of the page. Provide an electronic header on each page indicating the contract number, project; "W912" and "ZHTV number," and project name. Provide an electronic footer
on each page indicating the two-digit numbered division and the sequential page number of each page.

1.10 AVAILABILITY OF UTILITIES

a. Availability and Use of Utility Services

The Contractor may at the Contractor's option and expense, establish temporary connections to electric and water utilities for the Contractor's use during the contract performance period. Electric and water usage are centrally metered by DLA and the Government will pay all usage costs. Coordinate with the private utility system owners, as directed by the Contracting Officer for connection details and costs. The Contractor shall be responsible for all plans, permits, coordination, work and costs associated with connection to utilities with disconnection and site restoration upon completion of work.

b. Additional Requirements

(1) Drinking Water may not be obtained from existing outlets by Contractor personnel.

(2) Existing Washing Facilities in the building may not be used by Contractor employees.

1.10.1 Alterations to Utilities

Where changes and relocations of utility lines are noted to be performed by others, the Contractor shall give the Contracting Officer at least thirty (30) calendar days written notice in advance of the time that the change or relocation is required. In the event that, after the expiration of thirty (30) calendar days after the receipt of such notice by the Contracting Officer, such utility lines have not been changed or relocated and delay is occasioned to the completion of the work under contract, the Contractor may be entitled to a time extension equal to the period of time lost by the Contractor after the expiration of said thirty (30) calendar day period.

1.10.2 Interruptions of Utilities

a. No utility services shall be interrupted by the Contractor to make connections, to relocate, or for any purpose without approval of the Contracting Officer.

b. Request for Permission to shut down services shall be submitted in writing to the Contracting Officer not less than seventeen (17) working days before date of proposed interruption. The request shall give the following information:

(1) Nature of Utility. (Gas, L.P. or H.P., Water, etc.)
(2) Size of line and location of shutoff.
(3) Buildings and services affected.
(4) Hours and date of shutoff.
(5) Estimated length of time services will be interrupted.

c. Services shall not be shut off until receipt of approval of the proposed hours and date from the Contracting Officer.

d. Shutoffs which will cause interruption of Government work operations as determined by the Contracting Officer shall be accomplished during regular non-work hours or on non-work days of the Using Agency without any additional cost to the Government.

e. Operation of valves on water mains will be by persons of that utility. Where shutoff of water lines interrupts service to fire hydrants or fire sprinkler systems, the Contractor shall arrange his operations and have sufficient material and personnel available to complete the work without undue delay or to restore service without delay in event of emergency.

f. Flow in gas mains which have been shut off shall not be restored until the Government inspector has determined that all items serviced by the gas line have been shut off.

1.11 NOT USED

1.12 PERFORMANCE OF WORK BY THE CONTRACTOR

a. The requirements found in Section 00 70 00, FAR 52.236-1 "Performance of Work By the Contractor" apply.

b. For purposes of Section 00 70 00, clause 52.236-1, only, "WORK BY THE CONTRACTOR" is defined as prime Contractor direct contract labor (including testing and layout personnel), exclusive of other general condition or field overhead personnel, material, equipment, or subcontractors. The "TOTAL AMOUNT OF WORK" is defined as total direct contract labor (including testing and layout personnel), exclusive of other general condition or field overhead personnel, material, or equipment.

c. Within seven calendar days after the award of any subcontract at any tier, either by himself or a subcontractor, the Contractor shall submit to the Contracting Officer a completed Standard Form SF1413 Statement and Acknowledgement (available at the GSA Forms Library, https://www.gsa.gov/reference/forms#). The form shall include the subcontractor's acknowledgement of the inclusion in his subcontract of the clauses in Section 00 70 00 of this contract entitled 52.222-4 "Contract

Work Hours and Safety Standards - Overtime Compensation"; 52.222-8 "Payrolls and Basic Records"; 52.222-7 "Withholding of Funds"; 52.222-14 "Disputes Concerning Labor Standards"; 52.222-13 "Compliance with Construction Wage Rate Requirements and Related Regulations"; 52.222-6 "Construction Wage Rate Requirements" (formerly named "Davis-Bacon Act"); 52.222-9 "Apprentices and Trainees"; 52.222-10 "Compliance with Copeland Act Requirements"; 52.222-11 "Subcontracts (Labor Standards); 52.222-12 "Contract Termination - Debarment"; 52.222-15 "Certification of Eligibility". Nothing contained in this contract shall create any contractual relation between any subcontractor and the Government.

d. Veterans Employment Emphasis for U.S. Army Corps of Engineers Contracts

In addition to complying with the requirements outlined in Subpart 22.13, provision 52.222-38, clause 52.222-35, clause 52.222-37, DFARS Subpart 222.13 and United States Department of Labor regulations, U.S. Army Corps of Engineers (USACE) contractors and subcontractors at all tiers are encouraged to promote the training and employment of U.S. veterans while performing under a USACE contract. While no set-aside, evaluation preference, or incentive applies to the solicitation or performance under the resultant contract, USACE contractors are encouraged to seek out highly qualified veterans to perform services under this contract. The following resources are available to assist USACE contractors in their outreach efforts:

(1) U.S. Department of Labor Veterans' Employment and Training Service (VETS): https://www.dol.gov/vets/

(2) Federal veteran employment information: https://www.fedshirevets.gov/

(3) Veterans’ Employment and Training Service (VETS): http://www.dol.gov/vets/

(4) Veterans Opportunity to Work (VOW) Program: https://benefits.va.gov/vow/

(5) U.S. Army Warrior Transition Command Employment Index: http://wct.army.mil/modules/employers/index.html

(6) Hiring Our Heroes: https://www.uschamberfoundation.org/hiring-our-heroes

1.13 SUPERINTENDENCE OF SUBCONTRACTORS

a. The Contractor shall be required to furnish the following, in addition to the superintendence required by clause 52.236-6 - "Superintendence By The Contractor" in Section 00 70 00.

(1) If more than 50 percent and less than 70 percent of the value of the contract work is subcontracted, one superintendent shall be provided at the site and on the Contractor's payroll to be responsible for coordinating, directing, inspecting and expediting the subcontract work.

(2) If 70 percent or more of the value of the work is subcontracted, the Contractor shall be required to furnish two such superintendents to be responsible for coordinating, directing, inspecting and expediting the subcontract work.

b. If the Contracting Officer, at any time after 50 percent of the subcontracted work has been completed, finds that satisfactory progress is being made, he may waive all or part of the above requirements for additional superintendence subject to the right of the Contracting Officer to reinstate such requirement if at any time during the progress of the remaining work he finds that satisfactory progress is not being made.

1.14 IDENTIFICATION OF EMPLOYEES.

a. The Contractor shall be responsible for furnishing an identification badge/card to each employee prior to the employees work on-site, and for requiring each employee engaged on the work to display identification as may be approved and directed by the Contracting Officer. All prescribed identification shall immediately be delivered to the Contracting Officer for cancellation upon release of the employee.

1.15 NO ASBESTOS - CONTAINING MATERIAL (ACM) CERTIFICATION

1.15.1 Not Used

1.15.2 Construction Phase

Before final payment to the contractor, the contractor's project engineer/manager will sign and submit to the Government, on the contracting firm's letterhead, a dated copy of the following statement:

I hereby certify that to the best of my knowledge no asbestos-containing material (ACM) was used as a building material during this project. Furthermore, I understand that the building owner presumes that all materials marked "May Contain mineral fibers" are considered asbestos unless I either:

(1) Submit a certification for each individual product installed and identified to contain mineral fibers that no asbestos-containing materials were installed.

(2) Submit documentation to show that the products containing mineral fiber materials have been microscopically examined by an AIHA- or NVLAP-certified laboratory and the lab has determined that the material does not contain asbestos.

1.16 WARRANTY OF CONSTRUCTION

a. In addition to the requirements found in clause 52.246-21 "WARRANTY OF CONSTRUCTION" in Section 00 70 00 the following shall be included:

(1) This warranty shall continue for a period of 1 year from the date of final acceptance of the work. If the Government takes possession of any part of the work before final acceptance, this warranty shall continue for a period of 1 year from the date the Government takes possession.

(2) Provide names, addresses, and telephone numbers of all subcontractors, equipment suppliers, or manufacturers with specific designation of their area of responsibilities if they are to be contacted directly on warranty corrections.

b. Warranty Management

(1) Warranty Management Plan

The Contractor shall develop a warranty management plan which shall contain information relevant to the clause "Warranty of Construction" in clause 52.246-21 in Section 00 70 00. At least thirty (30) calendar days before the planned pre-warranty conference, the Contractor shall submit the warranty management plan for Government approval. The warranty management plan shall include all required actions and documents to assure that the Government receives all warranties to which it is entitled. The plan shall be in narrative form and contain sufficient detail to render it suitable for use by future maintenance and repair personnel, whether tradesmen, or of engineering background, not necessarily familiar with this contract. The term "status" as indicated below shall include due date and whether item has been submitted or was accomplished. Warranty information made available during the construction phase shall be submitted to the Contracting Officer for approval prior to each monthly pay estimate. Approved information shall be assembled in a binder and shall be turned over to the Government upon acceptance of the work. The construction warranty period shall begin on the date of project acceptance and shall continue for the full product warranty period. A joint 4 month and 9 month warranty inspection shall be conducted, measured from time of acceptance, by the Contractor, Contracting Officer and the Customer Representative. Information contained in the warranty management plan shall include, but shall not be limited to, the following:

(a) Roles and responsibilities of all personnel associated with the warranty process, including points of contact and telephone numbers within the organizations of the Contractors, subcontractors, manufacturers or suppliers involved.

(b) Listing and status of delivery of all Certificates of Warranty for extended warranty items, to include roofs, HVAC balancing, pumps, motors, transformers, and for all commissioned systems such as fire protection and alarm systems, sprinkler systems, lightning protection systems, etc.

(c) A list for each warranted equipment, item, and feature of construction or system indicating:

1. Name of item.

2. Model and serial numbers.

3. Location where installed.

4. Name and phone numbers of manufacturers or suppliers.

5. Names, addresses and telephone numbers of sources of spare parts.

6. Warranties and terms of warranty. This shall include one-year overall warranty of construction. Items which have extended warranties shall be indicated with separate warranty expiration dates.

7. Cross-reference to warranty certificates as applicable.

8. Starting point and duration of warranty period.

9. Summary of maintenance procedures required to continue the warranty in force.

10. Cross-reference to specific pertinent Operation and Maintenance manuals.

11. Organization, names and phone numbers of persons to call for warranty service.

12. Typical response time and repair time expected for various warranted equipment.

(d) The Contractor's plans for attendance at the 4 and 9 month post-construction warranty inspections conducted by the Government.

(e) Procedure and status of tagging of all equipment covered by extended warranties.

(f) Copies of instructions to be posted near selected pieces of equipment where operation is critical for warranty and/or safety reasons.

c. Performance Bond

(1) The Contractor's Performance Bond will remain effective throughout the construction warranty period and warranty extensions.

(2) In the event the Contractor or his designated representative(s) fails to commence and diligently pursue any work required, and in a manner pursuant to the requirements thereof, the Contracting Officer shall have a right to demand that said work be performed under the Performance Bond by making written notice on the surety. If the surety fails or refuses to perform the obligation it assumed under the Performance Bond, the Contracting Officer shall have the work performed by others, and after completion of the work, may make demand for reimbursement of any or all expenses incurred by the Government while performing the work, including, but not limited to administrative expenses.

(3) In the event sufficient funds are not available to cover the construction warranty work performed by the Government at the Contractor's expense, the Contracting Officer will have the right to recoup expenses from the bonding company.

(4) Following oral or written notification of required warranty repair work, the Contractor will respond as dictated by para. 1.16e "Contractor's Response to Warranty Service Requirements". Written verification will follow oral instructions. Failure of the Contractor to respond will be cause for the Contracting Officer to proceed against the Contractor as outlined in the paragraph 1.16c(2) and/or (3)"Performance Bond" .(2)and/or (3) above.

d. Pre-Warranty Conference

Prior to contract completion and at a time designated by the Contracting Officer, the Contractor shall meet with the Contracting Officer to develop

a mutual understanding with respect to the requirements of this clause. Communication procedures for Contractor notification of warranty defects, priorities with respect to the type of defect, reasonable time required for Contractor response, and other details deemed necessary by the Contracting Officer for the execution of the construction warranty shall be established/reviewed at this meeting. In connection with these requirements and at the time of the Contractor's quality control completion inspection, the Contractor will furnish the name, telephone number and address of a licensed and bonded company which is authorized to initiate and pursue warranty work action on behalf of the Contractor. This point of contact will be located within the local service area of the warranted construction, will be continuously available, and will be responsive to Government inquiry on warranty work action and status. This requirement does not relieve the Contractor of any of his responsibilities in connection with other portions of this provision.

e. Contractor's Response to Warranty Service Requirements.

Following oral or written notification by the Contracting Officer or an authorized representative of the installation designated in writing by the Contracting Officer, the Contractor shall respond to warranty service requirements in accordance with the "Warranty Service Priority List" and the three categories of priorities listed below. The Contractor shall submit a report on any warranty item that has been repaired during the warranty period. The report shall include the cause of the problem, date reported, corrective action taken, and when the repair was completed. If the Contractor does not perform the construction warranty within the timeframe specified, the Government will perform the work and backcharge the construction warranty payment item established.

(1) First Priority Code 1 Perform on-site inspection to evaluate situation, determine course of action, initiate work within 24 hours and work continuously to completion or relief.

(2) Second Priority Code 2 Perform on-site inspection to evaluate situation, determine course of action, initiate work within 48 hours and work continuously to completion or relief.

(3) Third Priority Code 3 All other work to be initiated within (5) five work days and work continuously to completion or relief.

(4) The "Warranty Service Priority List" is as follows:

Code 1 Air Conditioning System

a. Buildings with computer equipment.
b. Air Force Reserve Projects, Training Bldg, OMS Administrative Areas of Bldg, and Indoor Ranges.

Code 2 Air Conditioning Systems

a. Air conditioning leak in part of building, if causing damage.
b. Air conditioning system not cooling properly
c. Admin buildings with ADP equipment not on priority list.

Code 1 Doors

a. Overhead doors not operational.

P2# 519087 - DSSC DLA Repair Building 27
Columbus, OH

Code 1 Electrical
a. Power failure (entire area or any building operational after 1600 hours).
b. Security lights
c. Smoke detectors and fire alarm systems

Code 2 Electrical
a. Power failure (no power to a room or part of building).
b. Receptacle and lights.

Code 3 Electrical
a. Parking area lights

Code 1 Gas
a. Leaks and breaks.

Code 1 Heat
a. Army Reserve Projects, Training Bldg & OMS Administrative Areas of Bldg.
b. Area power failure affecting heat.

Code 2 Heat
a. Army Reserve Projects, Training Bldg & OMS Administrative Areas of Bldg.

Code 3 Interior
a. Floor damage
b. Paint chipping or peeling

Code 1 Intrusion Detection Systems
Finance, PX and Commissary, and high security areas.

Code 2 Intrusion Detection Systems
Systems other than those listed under Code 1.

Code 2 Plumbing
a. Flush valves not operating properly
b. Fixture drain, supply line commode, or water pipe leaking.
c. Commode leaking at base.

Code 3 Plumbing
a. Leaking faucets

Code 1 Refrigeration
a. Mess Hall, Army Reserve Projects.

Code 1 Roof Leaks
Temporary repairs will be made where major damage to property is occurring.

Code 2 Roof Leaks
Where major damage to property is not occurring, check for location of leak during rain and complete repairs on a Code 2 basis.

Code 1 Sprinkler System
All sprinkler systems, valves, manholes, deluge systems, and air systems to sprinklers.

Code 1 Water (Exterior)

Normal operation of water pump station.

Code 2 Water (Exterior)
No water to facility.

Code 1 Water, Hot (and Steam)
a. Army Reserve Projects, Training Bldg & OMS Bldg.
Code 2 Water, Hot
No hot water in portion of building listed under Code 1 (items a through c)

(5) Should parts be required to complete the work and the parts are not immediately available, the Contractor shall have a maximum of 12 hours after arrival at the job site to provide the Contracting Officer or an authorized representative of the installation designated in writing by the Contracting Officer, with firm written proposals for emergency alternatives and temporary repairs for Government participation with the Contractor to provide emergency relief until the required parts are available on site for the Contractor to perform permanent warranty repair. The Contractors proposals shall include a firm date and time that the required parts shall be available on site to complete the permanent warranty repair. The Contracting Officer or an authorized representative of the installation designated in writing by the Contracting Officer, will evaluate the proposed alternatives and negotiate the alternative considered to be in the best interest of the Government to reduce the impact of the emergency condition. Alternatives considered by the Contracting Officer or an authorized representative of the installation designated in writing by the Contracting Officer will include the alternative for the Contractor to "Do Nothing" while waiting until the required parts are available to perform permanent warranty repair. Negotiating a proposal which will require Government participation and the expenditure of Government funds shall constitute a separate procurement action by the using service.

f. Equipment Warranty Identification Tags

(1) The Contractor at the time of installation shall provide warranty identification tags on all Contractor and Government furnished equipment which he has installed.

(a) The tags shall be suitable for interior and exterior locations, resistant to solvents, abrasion, and to fading caused by sunlight, precipitation, etc. These tags shall have a permanent pressure-sensitive adhesive back, and they shall be installed in a position that is easily (or most easily) noticeable. Contractor furnished equipment that has differing warranties on its components will have each component tagged.

(b) Sample tags shall be submitted for Government review and approval. These tags shall be filled out representative of how the Contractor will complete all other tags.

(c) Tags for Warrantied Equipment: The tag for this equipment shall be similar to the following. Exact format and size will be as approved.

EQUIPMENT WARRANTY CONTRACTOR FURNISHED EQUIPMENT	
MFG NAME	MODEL NO.
SERIAL NO.	
CONTRACT NO.	
CONTRACTOR NAME	
CONTRACTOR WARRANTY EXPIRES	
MFG WARRANTY(IES) EXPIRE	

EQUIPMENT WARRANTY GOVERNMENT FURNISHED EQUIPMENT	
MFG NAME	MODEL NO.
SERIAL NO.	
CONTRACT NO.	
CONTRACTOR NAME	
CONTRACTOR WARRANTY EXPIRES	
MFG WARRANTY(IES) EXPIRE	

(d) If the manufacturer's name (MFG), model number and serial number are on the manufacturer's equipment data plate and this data plate is easily found and fully legible, this information need not be duplicated on the equipment warranty tag. The Contractor warranty expires (warranty expiration date) and the final manufacturer's warranty expiration date will be determined as specified by clause 52.246-21 "WARRANTY OF CONSTRUCTION" in Section 00 70 00.

(2) Execution. The Contractor will complete the required information on each tag and install these tags on the equipment by the time of and as a condition of final acceptance of the equipment.

(3) Payment. The work outlined above is a subsidiary portion of the contract work, and has a value to the Government approximating 5% of the value of the Contractor furnished equipment. The Contractor will assign a value of that amount in the breakdown for progress payments mentioned in the clause 52.232-5 "Payments Under Fixed-Price Construction Contracts" in Section 00 70 00.

(4) Equipment Warranty Tag Replacement. The Contractor's warranty with respect to work repaired or replaced shall run for one year from the date of repair or replacement. Such activity shall include an updated warranty identification tag on the repaired or replaced equipment. The tag shall be furnished and installed by the Contractor, and shall be identical to the original tag, except that the Contractor's warranty expiration date will be one year from the date of acceptance of the repair or replacement.

1.17 SALVAGE MATERIALS AND EQUIPMENT

The Contractor shall maintain adequate property control records for all materials or equipment specified in UFGS Section 02 41 00 DEMOLITION AND DECONSTRUCTION to be salvaged. These records may be in accordance with the Contractor's system of property control, if approved by the property administrator. The Contractor shall be responsible for the adequate storage and protection of all salvaged materials and equipment and shall replace, at no cost to the Government, all salvage materials and equipment which are broken or damaged during salvage operations as the result of his negligence, or while in his care.

1.18 NOT USED

1.19 PROJECT SIGN

a. General. The Contractor shall furnish and erect at the location directed one project sign. The sign shall be lettered on one side only and shall conform to the details shown as an attachment at the end of this specification section.

Project nomenclature shall be: DSCC DLA Repair Building 27

Architect-Engineer name shall be: CMTA - DLR Group JVSponsor name shall be: USACE - Louisville District

b. Materials.

Sign Panels can be constructed using either of the materials below:

(1) The sign panels shall be constructed of good sound materials suitable for the purpose. Lumber shall be salt treated softwood of No. 2 grade or better. Sizes shown are nominal. Plywood shall be 1/2-inch, B-B, marine grade and with dimensional lumber uprights and bracing. Screws shall be of commercial quality and of sizes shown.

(2) The sign Panels shall be fabricated using premium, furniture-grade exterior plywood laminated on both sides with factory-baked polyester painted aluminum surfaces and with dimensional lumber uprights and bracing. Screws shall be commercial quality and of the sizes shown.

c. Maintenance. The signs shall be maintained in good condition until completion of the contract, shall remain the property of the Contractor, and shall be removed from the site upon completion of work under the contract.

d. Logos. The Corps of Engineers and Army Star Logo must be provided in the sizes and styles as specified by the graphic formats shown in the attachment at the end of this section.

e. Painting. The sign and posts shall be given one prime coat and two finish coats of gloss exterior-type enamel paint, either as specified in the Base Architectural Compatibility Guide or as approved by the COR.

Paint colors shall be as follow:

Black - Federal Standard 595a Color Number 27038
White - Federal Standard 595a Color Number 27875

Red - PANTONE 032

f. Payment. No separate payment will be made for furnishing and erecting the project sign(s) as specified and costs thereof shall be considered a subsidiary obligation of the Contractor.

1.20 TIME EXTENSIONS FOR UNUSUALLY SEVERE WEATHER

This provision specifies the procedure for the determination of time extensions for unusually severe weather in accordance with the clause 52.249-10 "Default (Fixed-Price Construction)" in Section 00 70 00. In order for the Contracting Officer to award a time extension under this clause, the following conditions must be satisfied:

The weather experienced at the project site during the contract period must be found to be unusually severe, that is, more severe than the adverse weather anticipated for the project location during any given month.

Indicate the location of the National Weather Service office closest to the site. See: https://www.weather.gov/srh/nwsoffices The Contractor shall make his own investigations and determinations as to weather conditions at the site. Data may be obtained from various National Weather Service offices located generally at airports of principal cities, the nearest to this project being: Columbus, OH.

The unusually severe weather must actually cause a delay to the completion of the project. The delay must be beyond the control and without the fault or negligence of the Contractor.

The following schedule of monthly anticipated adverse weather delays is based on National Oceanic and Atmospheric Administration (NOAA) or similar data for the project location and will constitute the base line for monthly weather time evaluations. The Contractor's progress schedule must reflect these anticipated adverse weather delays in weather dependent activities.

MONTHLY ANTICIPATED ADVERSE WEATHER DELAY
WORK DAYS BASED ON FIVE (5) DAY WORK WEEK

JAN	FEB	MAR	APR	MAY	JUN	JUL	AUG	SEP	OCT	NOV	DEC
9	7	6	5	6	5	5	4	5	4	4	6

Upon acknowledgment of the Notice to Proceed (NTP) and continuing throughout the contract, the Contractor will record on the daily CQC report, the occurrence of adverse weather and resultant impact to normally scheduled work. Actual adverse weather delay days must prevent work on critical activities for 50 percent or more of the Contractor's scheduled work day. The number of actual adverse weather delay days shall include days impacted by actual adverse weather (even if adverse weather occurred in previous month), be calculated chronologically from the first to the last day of each month, and be recorded as full days. If the number of actual adverse weather delay days exceeds the number of days anticipated listed above, the Contracting Officer will convert any qualifying delays to calendar days, giving full consideration for equivalent fair weather work days, and issue a modification in accordance with the clause 52.249-10

"Default (Fixed-Price Construction)" in Section 00 70 00.

1.21 CONTRACTOR SUPPLY AND USE OF ELECTRONIC SOFTWARE FOR PROCESSING WAGE REQUIREMENT STATUE CERTIFIED LABOR PAYROLLS

a. The contractor is encouraged to use a commercially-available electronic system to process and submit certified payrolls electronically to the Government. The requirements for preparing, processing, and providing certified labor payrolls are established by the Wage Rate Requirements statute.

b. If the contractor elects to use an electronic payroll processing system, then the contractor shall be responsible for obtaining and providing for all access, licenses, and other services required to provide for receipt, processing, certifying, electronically transmitting to the Government, and storing weekly payrolls and other data required for the contractor to comply with the Wage Rate Requirements statute. When the contractor uses an electronic payroll system, the electronic payroll service shall be used by the contractor to prepare, process, and maintain the relevant payrolls and basic records during all work under this construction contract and the electronic payroll service shall be capable of preserving these payrolls and related basic records for the required 3 years after contract completion. If the contractor chooses to use an electronic payroll system, then the contractor shall obtain and provide electronic system access to the Government, as required to comply with the Wage Rate Requirements over the duration of this construction contract. The access shall include electronic review access by the Government contract administration office to the electronic payroll processing system used by the contractor.

c. The contractor's provision and use of an electronic payroll processing system shall meet the following basic functional criteria:

(1) Commercially available;
(2) Compliant with appropriate Wage Rate Requirements statue payroll provisions in the Federal Acquisition Regulation (FAR);
(3) Able to accomodate the required number of employees and subcontractors planned to be employed under the contract;
(4) Capable of producing an Excel spreadsheet-compatible electronic output of weekly payroll records for export in an Excel spreadsheet to be imported into the contractor's Quality Control System (QCS) version of Resident Management System (RMS), that in turn shall export payroll data to the Government's RMS;
(5) Demonstrated security of data and data entry rights;
(6) Ability to produce contractor-certified electronic versions of weekly payroll data;
(7) Ability to identify erroneous entries and track the date/time of all versions of the certified Wage Rate Requirements statute payrolls submitted to the government over the life of the contract;
(8) Capable of generating a durable record copy, that is, a CD or DVD and PDF file record of data from the system database at end of the contract closeout. This durable record copy of data from the electronic payroll processing system shall be provided to the Government during contract closeout.
(9) Contractors will upload weekly payroll records into RMS-Contractor Payroll section in the Quality Control System (QCS) version of Resident Management System (RMS), that in turn shall export payroll data to the Government's RM.

d. All contractor-incurred costs related to the contractor's provision and use of an electronic payroll processing service shall be included in the contractor's price for the overall work under the contract. The costs for compliance with the Wage Rate Requirements statute by using electronic payroll processing services shall not be a separately bid or reimbursed item under this contract.

1.22 NOT USED

1.23 INTERFERENCE WITH TRAFFIC AND PUBLIC AND PRIVATE PROPERTY

a. The Contractor at all times shall dispose his plant and conduct the work in such manner as to cause as little interference as possible with private and public travel. Damage (other than that resulting from normal wear and tear) to roads, shall be repaired to as good a condition as they were prior to the beginning of work and to the satisfaction of the Contracting Officer.

b. Under no circumstances will steel tracked equipment travel across any pavement, concrete or asphalt, on base. All steel tracked equipment will be transported on trailers to the jobsite.

1.24 AUTHORIZED WORK DAYS AND HOURS

a. The standard workweek shall be Monday through Friday 0700-1600.

b. Contractor may request days and hours outside of the Standard Work Week when necessary to perform particular task or to maintain or recover schedule. Request are to be made 5 days in advance to the COR and User and not less than that required for schedule Coordination.

c. No work shall occur on federal holidays.

d. Authorized days and hours described above pertain to work inside the existing facilities and/or inside the secure construction laydown areas. Work outside secure areas may be scheduled as needed, subject to advance approval from the Contracting Officer's Representative and confirmation of availability of necessary services.

e. Prior to the start of any construction operations, a schedule of work or operations in proper sequence shall be submitted by the contractor for approval by the Fire Protection Branch, Security Police, Safety Office, and the Contracting Officer so as to cause a minimum amount of disruption to the normal flow of traffic on streets, pedestrian travel, base security, and facility operations.

f. Furnish flagmen, barricades, and other warning devices as required to safely route traffic through the construction areas. Selected streets may be closed to traffic when necessary during the construction operations, upon prior approval of the Contracting Officer. When roads are closed, establish and mark safe detours for vehicles to follow. Detours, road closures and lane closures shall be marked and signed in accordance with "Work Zone Traffic Control-Standards and Guidelines" (US Department of Transportation; Federal Highway Administration) or with the Ohio Department of Transportation, Ohio Manual of Uniform Traffic Control Devices (MUTCD). Furnish the Contracting Officer with the names, addresses and

telephone numbers of two employees who will be responsible for warning light and barricade maintenance.

g. Gate Hours - (The information in this paragraph is for information only and is subject to change in particular before or after federal holidays and the latter part of December) In general only the 24 hour gates are open on federal holidays and weekends.

The gate hours are subject to change and the Contractor is responsible for verifying them daily, sufficiently in advance of needing access, to properly and adequately plan and schedule delivery of materials, equipment, and personnel to mitigate impacts to contract performance. No equitable adjustment to the contract price and performance period will be made for changes in the operational hours of access control points (e.g. entry gates, etc.). All costs and delays incurred because of a change in the hours of operation, or having to wait in line to gain entry, shall be absorbed by the Contractor.

*Gate hours are subject to change as determined necessary by the Installation Commander.

1.25 NOT USED

1.26 COMPLIANCE WITH POST/BASE REGULATIONS

a. The site of the work is on a military reservation and all rules and regulations issued by the Commanding Officer covering general safety, security, sanitary requirements, pollution control and traffic regulations, shall be observed by the Contractor. Information regarding these requirements may be obtained by contacting the Contracting Officer, who will provide such information or assist in obtaining same from appropriate authorities.

b. Contractor personnel shall park only in areas authorized by the Contracting Officer.

1.27 EQUIPMENT OWNERSHIP AND OPERATING EXPENSE SCHEDULE

a. This clause does not apply to terminations. See FAR 52.249-5000, "Basis for Settlement of Proposals", Part 49.

b. Allowable costs for construction and marine plant and equipment in sound workable condition owned or controlled and furnished by a contractor or subcontractor at any tier shall be based on actual cost data for each piece of equipment or groups of similar serial and series for which the Government can determine both ownership and operating costs from the contractor's accounting records. When both ownership and operating costs cannot be determined for any piece of equipment or groups of similar serial or series equipment from the contractor's accounting records, costs for that equipment shall be based upon the applicable provisions of Engineer Pamphlet EP 1110-1-8, Construction Equipment Ownership and Operating Expense Schedule, Region. Working conditions shall be considered to be average for determining equipment rates using the schedule unless specified otherwise by the contracting officer. For equipment not included in the schedule, rates for comparable pieces of equipment may be used or a rate may be developed using the formula provided in the schedule. For forward pricing, the schedule in effect at the time of negotiations shall apply. For retroactive pricing, the schedule in effect at the time the

work was performed shall apply.

c. Equipment rental costs are allowable, subject to the provisions of FAR 31.105(d)(ii) and FAR 31.205-36. Rates for equipment rented from an organization under common control, lease-purchase arrangements, and sale-leaseback arrangements, will be determined using the schedule, except that actual rates will be used for equipment leased from an organization under common control that has an established practice of leasing the same or similar equipment to unaffiliated lessees.

d. When actual equipment costs are proposed and the total amount of the pricing action exceeds the simplified acquisition threshold (SAT), the contracting officer shall request the contractor to submit either certified cost or pricing data, or partial/limited data, as appropriate. The data shall be submitted on Standard Form 1411, Contract Pricing Proposal Cover Sheet.

1.28 LABOR, EQUIPMENT, AND MATERIAL REPORTS

Daily Equipment Report. The Contractor shall submit a daily report of all Contractor-owned or rented equipment at the jobsite. A similar report is required for all subcontractor equipment. The subcontractor's report may be separate or included with the Contractor's report provided the equipment is adequately identified as to ownership. The required equipment report shall include each item of equipment (hand-operated small tools or equipment excluded) on the job and shall specifically identify each item as to whether it is Contractor-owned or rented, shifts, hours of usage, down time for repairs, and standby time. Identification of the equipment shall include make, model and plant number of all items. Separate identification by a key sheet providing these data may be utilized with the daily report indicating the type of equipment and the equipment plant numbers. The format of the Daily Equipment Report will be as approved by the Government in the field.

Labor, Equipment, and Material Report for Extra Work/Cost. A Report shall also be submitted by the Contractor listing any labor, equipment and materials expended on and/or impacted by any change order directed by the Government and for which total price/time agreement has not been reached. These requirements also apply to subcontractors at any tier. The same Report is required at any time the Contractor claims or intends to claim for extra costs whether or not there is Government recognition (constructive changes). This requirement is in addition to any Contractor "Notice" or "Reservation of Rights". Submittal of such a report will not be construed as satisfying the "Notice" required under FAR 52.243-4 - "Changes" or any other clause. But, absence of such Reports submitted to the Government contemporaneously with the alleged extra work/cost will be considered as evidence that no such extra work/cost occurred that are chargeable to the Government.

The Report shall be detailed to the degree required by the Government in the field and shall contain the following as a minimum:

a. The cause of the extra labor, equipment or materials costs.

b. For extra labor - Indicate crew, craft, hours, location and cost. Describe nature or type of extra costs, i.e., extra work, overtime, acceleration, interference, reassignment, mobilizations and demobilizations, supervision, overhead, type of inefficiency, etc.

c. For extra equipment - Indicate type and description, hours, location, cost; whether working, idle, standby, under repair, extra work involved, etc.

d. For extra materials - Indicate type and description, where used, whether consumed, installed or multi-use, quantity, cost, extra work involved, etc.

e. Affected activities - Relate to Contract Schedule (Network Analysis); demonstrate whether delay or suspension is involved.

f. Segregate all entries by prime and each subcontractor.

g. Summarize costs daily and by cumulative subtotal or with frequency required by the Government.

This report will not be considered as evidence that any of the alleged extra costs actually occurred. The report will be used to check against over obligation of funds for change orders directed prior to price/time agreement and to track alleged extra costs the Contractor considers otherwise chargeable against the Government. The Government may respond at any interval to either challenge, amend or confirm the report. Absence of a Government response is not to be considered acquiescence or denial. The Government may order work stoppage if deemed necessary to avoid over obligation of funds. The frequency of the report shall be daily or as otherwise approved by the Government representative in writing.

1.29 ENGLISH-SPEAKING REPRESENTATIVE

At all times when any performance of the work at any site is being conducted by any employee of the Contractor or his subcontractors, the Contractor shall have a representative present at each site who has the capability of receiving instructions in the English language, fluently speaking the English language and explaining the work operations to persons performing the work, in the language that those performing the work are capable of understanding. The Contracting Officer shall have the right to determine whether the proposed representative has sufficient technical bilingual capabilities, and the Contractor shall immediately replace any individual not acceptable to the Contracting Officer.

1.30 SALES AND USE TAX

Some states have tax exemptions for certain aspects of work when done for the federal government and the Contractor shall check with the state where the project is located for more information. If a sales tax exemption is applicable, the contractor is responsible for obtaining any required exemption certification.

1.31 CONTRACTOR SECURITY TRAINING/FACILITY ACCESS REQUIREMENTS

a. All contractor employees, to include subcontractor employees, shall be briefed on the local iWATCH program (training standards provided by the requiring activity ATO) by the contractor and all associated subcontractors. This local developed training will be used to inform employees of the types of behavior to watch for and instruct employees to report suspicious activity to the COR. The training shall be completed within seven (7) calendar days after commencing work on the site with the results reported to the COR NLT seven (7) calendar days after completion

of training.

b. All contractor employees, to include subcontractor employees, shall comply with applicable installation, facility and area commander installation/facility access and local security policies and procedures (provided by government representative). The contractor shall also provide all information required for background checks to meet installation access requirements to be accomplished by installation Provost Marshal Office, Director of Emergency Services or Security Office. Contractor workforce must comply with all personal identity verification requirements as directed by DOD, HQDA and/or local policy. In addition to the changes otherwise authorized by clause 52.243-4 - "Changes" in Section 00 70 00 of this contract, should the Force Protection Condition (FPCON) at any individual facility or installation change, the Government may require changes in contractor security matters or processes.

C. Refer to FAR 52.222-54: "Employment Eligibility Verification" in Section 00 70 00 for e-Verify requirements.

1.32 INSURANCE--WORK ON A GOVERNMENT INSTALLATION

In addition to the requirements of clause 52.228-5 "Insurance - Work on a Government Installation" found in Section 00 70 00 the following shall be provided:

a. Coverage complying with State laws governing insurance requirements, such as those requirements pertaining to Workman's Compensation and Occupational Disease Insurance. Employer's Liability Insurance shall be furnished in limits of not less than $100,000.00 except in states with exclusive or monopolistic funds.

b. Comprehensive Automobile Liability Insurance for both bodily injury and property damage, shall be furnished in limits of not less than $200,000.00 per person, $500,000.00 per accident for bodily injury, and $20,000.00 per accident for property damage. When the Financial Responsibility or Compulsory Insurance Law of the State, requires higher limits, the policy shall provide for coverage of at least those higher limits.

c. Within seven calendar days after the award of contract, the Contractor shall submit to the Contracting Officer Evidence of Insurance for all insurance coverages. Dates of coverage shall be entered into RMS and maintained thru the contract duration. If and when new insurance is obtained because of expiration or renewal, new certificates shall be submitted to the Contracting Officer within seven days of obtainment and the new coverage information and dates entered into RMS.

1.33 NOT USED

1.34 AVAILABILITY OF SAFETY AND HEALTH REQUIREMENTS MANUAL (EM 385-1-1)

As covered by clause 52.236-13 "Accident Prevention" in Section 00 70 00, compliance with EM 385-1-1 is a requirement for this contract. Copies may be downloaded from the following website: https://www.publications.usace.army.mil/USACE-Publications/Engineer-Manuals/

1.35 FIRE PROTECTION DURING CONSTRUCTION

The Contractor is alerted to the requirements of FAR 52.236-12 "Cleaning Up" and more specifically to the requirements for fire protection during construction spelled out in UFC 3-600-01, EM 385-1-1, and NFPA 241

Building Construction and Demolition Operations. This item must be covered in the submittal required under FAR 52.236-13 "Accident Prevention".

1.36 NOT USED

1.37 NOT USED

1.38 NOT USED

1.39 CONSTRUCTION HAZARD COMMUNICATION

The Contractor is required to comply with the requirements of the OSHA Hazard Communication Standard in alignment with the Globally Harmonized System (GHS) (29 CFR 1926.59). This standard is designed to inform workers of safe and appropriate methods of working with hazardous substances in the workplace. The standard has five requirements, and every hazardous or potentially hazardous substance used or stored in the work area is subject to all five. They are:

(1) Hazard Classification. Any company which produces or imports a chemical or compound must conduct a hazard classification of the substance to determine its potential health or physical hazard. The hazard evaluation consists of an investigation of all the available scientific evidence about the substance. The Contractor is required to assure that all producers (manufacturer/distributors) have performed these classifications and transmit the required information with any hazardous materials being used or stored on the project site. From the hazard classification, a substance may be classified as a health hazard or a physical hazard. These classifications are then further broken down into hazard categories according to the severity of the effect:

Health Hazards	**Physical Hazards**
Carcinogens	Combustible liquids
Irritants	Compressed gases
Sensitizers	Explosives
Corrosives	Flammables
Toxic substances	Organic peroxides
Highly toxic substances	Unstable substances

Health Hazards	**Physical Hazards**
Substances harmful to specific organs or parts of the body	Water-reactive substances

(2) Warning Labels. If a chemical is hazardous or potentially hazardous, the producer or importer must affix a label to every container of that chemical before it leaves his facility. The Contractor must assure these labels are attached and legible. The label must identify the hazard symbol/pictograms, signal words, hazard statements, product name or identifier (identify hazardous ingredients, where appropriate), precautionary statements and pictograms, supplier identification, and supplemental information. If the hazardous substance is transferred to another container, that container must then be labeled, tagged, or marked with the name of the chemical and the appropriate hazard warning. Warning labels shall be replaced immediately if they are defaced or removed.

(3) Safety Data Sheets. The producer or importer must also supply a safety data sheet (SDS) that follows the 16 heading format as defined by GHS. The Contractor must keep these available in the work area where the substance is used, so that the people using the substance can easily review important safety and health information, such as:

(i) Emergency procedures for leaks, spills, fire and first aid.

(ii) Precautions necessary for use, handling, and storage.

(iii) Useful facts about the substance's physical or chemical properties.

(iv) Regulatory information and any other pertinent information including information on preparation and revision of the SDS.

(4) Work Area Specific Training. Because of hazardous substance may react differently depending on how it is used or the environment of the work area, the Contractor must conduct work area specific training; special training which takes the Contractor's operations, environment, and work policies into consideration. Work area training presents:

The hazardous substances which are present in the work place and the hazards they pose.

Ways to protect against those hazards, such as protective equipment, emergency procedures, and safe handling.

Where the SDS's are kept, and an explanation of the labeling system.

Where the Contractor's written Hazard Communication Program is located.

(5) The Written Hazard Communication Program. In accordance with OSHA and the EM 385-1-1 requirements, the Contractor must prepare a

written Hazard Communication Program. This document will be included in the Contractor's Accident Prevention Plan. This document states the hazardous or toxic agent inventory, how the Contractor plans to ensure that hazardous materials are appropriately labeled, how and where SDS's will be maintained, and how employees will be provided with specific information and training.

1.40 NOT USED

1.41 Mechanical/Electrical Room Layout

Detailed mechanical/electrical room layout drawings shall be submitted for approval in accordance with Section 01 33 00.00 SUBMITTAL PROCEDURES. Layout drawings shall show location and maintenance clearances for all mechanical/electrical room equipment, and all utility runs/chases for mechanical, electrical, telephone and other similar systems. Drawings shall be submitted at the same time as the submittals for the equipment to be located within the mechanical/electrical room.

1.42 RED ZONE MEETING

Approximately sixty (60) calendar days prior to Contract Required Completion Date, the Contractor and the Government's project delivery team will conduct what is known as the Red Zone Meeting to discuss the close-out process, to schedule the events and review responsibilities for actions necessary to produce a timely physical, as well as fiscal, project close-out. The Red Zone meeting derives its name from the football term used to describe the team effort to move the ball the last 20 yards into the end zone. The close-out of a construction project sometimes can be equally as hard and most definitely requires the whole team's efforts.

1.43 NOT USED

1.44 PARTNERING

In order to most effectively accomplish this contract, the Government proposes to form a partnership with the Contractor to develop a cohesive building team. It is anticipated that this partnership would involve Project Delivery Team members from the Corps of Engineers, Program Sponsor, facility user representatives, the Contractor, primary subcontractors, and the designers.

The partnership will draw upon the strength of each organization in an effort to achieve a project that is without any safety mishaps, conforms to the Contract, stays within budget and on schedule.

The Government encourages partnering to be initiated near the beginning of the Contract and endure through the life of the Contract. This partnership would be bilateral in membership and participation will be completely mandatory

1.45 PROGRESS PHOTOGRAPHS

The Contractor shall furnish digital photos (in pdf) depicting the progress of the work during construction and, after final inspection by the Contracting Officer, of the conditions at the completion of the

contract.

The monthly photography shall be performed between the first and fifth of each month, and the PDF in RMS 3.0, with digital photos, delivered no later than the 10th of each month taken. A minimum of six views from different positions shall be taken as directed to show, inasmuch as possible, work accomplished during the previous month, and a minimum of six views shall be taken of the completed work. Additional views and positions may be required by the Contracting Officer to depict the work done.

Photos shall be at least 4 megapixels and in JPEG format.

No separate payment will be made for these services and all costs in connection thereto shall be considered a subsidiary obligation of the Contractor.

1.46 DAMAGE TO WORK (LRL)

The responsibility for damage to any part of the permanent work shall be as set forth in FAR 52.236-7 "Permits And Responsibilities". However, if in the judgment of the Contracting Officer, any part of the permanent work performed by the Contractor is damaged by flood or earthquake, which damage is not due to the failure of the Contractor to take reasonable precautions or to exercise sound engineering and construction practices in the conduct of the work, the Contractor will make the repairs as ordered by the Contracting Officer and full compensation for such repairs will be made at the applicable contract unit or lump sum prices as fixed and established in the contract. If, in the opinion of the Contracting Officer, there are no contract unit or lump sum prices applicable to any part of such work, an equitable adjustment pursuant to FAR 52.243-4 "Changes", will be made as full compensation for the repairs of that part of the permanent work for which there are no applicable contract unit or lump sum prices. Except as herein provided, damage to all work (including temporary construction), utilities, materials, equipment and plant shall be repaired to the satisfaction of the Contracting Officer at the Contractor's expense, regardless of the cause of such damage.

1.47 NOT USED

1.48 NOT USED

1.49 NOT USED

1.50 NOT USED

1.51 NOT USED

1.52 NOT USED

1.53 NOT USED

1.54 NOT USED

1.55 FINAL CLEANING

Clean the premises in accordance with clause 52.236-12 "Cleaning Up" in Section 00 70 00 and additional requirements state here. Remove stains, foreign substances, and temporary labels from surfaces. Vacuum carpet and soft surfaces. Clean equipment and fixtures to a sanitary condition. Clean or replace filters of operating equipment if cleaning is not possible or practicable. Remove debris from roofs, drainage systems, gutters, and downspouts. Sweep paved areas and rake clean landscaped areas. Remove waste, surplus materials, and rubbish from the site. Remove all temporary structures, barricades, project signs, fences and construction facilities. A list of completed clean-up items shall be submitted on the day of final inspection.

1.56 BASIS FOR SETTLEMENT OF PROPOSALS

See FAR clause 31.105(d)(2)(i) for establishing the cost of construction equipment.

1.57 NOT USED

1.58 FINAL ACCEPTANCE TESTING

1.58.1 General

Where work involves fire suppression and/or fire alarm systems, comply with testing requirements in this section and in the applicable technical specification section(s). In the event of conflict between this section and the applicable technical specification section(s), the more stringent requirement shall govern.

1.58.2 Request for Final Acceptance Testing

At least 14 days prior to the proposed start of the Final Acceptance Test for fire suppression and/or fire alarm systems, submit a Request for Final Acceptance Testing. Include a signed memorandum from the Quality Control Manager, applicable system completion certificates, and a testing plan.

a. The Quality Control Manager shall certify the system(s) are ready for final acceptance testing. Include confirmation that each addressable are complete, and all quality control measures and preliminary tests have been successfully completed with any deficiencies resolved and re-tested.

b. Completion certificates shall include NFPA 13 Material and Test Certificate, NFPA 72 Fire Alarm System Record of Completion, and/or other similar documentation as applicable.

c. The testing plan shall identify the devices to be tested, the sequence in which they will be tested, the procedures and equipment to be used, applicable NFPA or other standards, the names and qualifications of the Contractor's installing technician(s) and/or engineer(s) who shall conduct the test, and the communication devices to be used during the test.

1.58.3 Test Administration

On the date of Final Acceptance Testing, provide one hard-copy set of as-built drawings at the project site for Government reference during the test, and provide two hard-copy sets of the applicable inspection and testing forms for use by the Fire Department and the Contracting Officer's designated representative. Conduct the test as detailed in the testing plan.

1.59 WORK CLEARANCES AND COORDINATION

1.59.1 Digging Clearances

All excavation, trenching, soil boring, directional boring, or similar work requires advance Government approval. At least two weeks prior to the planned work, mark the site with stakes or paint, provide a detailed description and location map to the Government project inspector, and request Government preparation of an DLA Work Clearance Request. The Government shall process the DLA Form to obtain coordination from utility system owners, and shall notify the Contractor of the outcome and, if approved as planned, the date upon which work is approved to proceed. Do not proceed with work prior to receipt of the completed DLA Form.

When contacting OUPS they will only mark certain Utilities, The Contractor may need to coordinate GPR or other means to locate Utilities at contractors cost.

1.59.2 Building Systems Service Outages

Where work requires shutdown or modification of fire sprinklers, HVAC systems, electrical distribution, and/or other building systems or utilities, follow procedures as described above for digging clearances. The applicable system owner shall operate all controls or valves. Do not proceed with work prior to receipt of the completed and signed DLA Form. The purpose of the phasing plan is to maintain continuous facility operations throughout construction, except during the total facility shutdown of no more than 14 calendar days for phase 5. The facility shall remain operational with no additional disruption in operations during phases 1 through 4.

1.59.3 Safe Clearance from Underground Utilities

Where work is required near underground utilities, the Contractor shall physically verify underground utility locations, including utility depth, by hand digging using wood or fiberglass handled tools when any adjacent construction work is expected to come within 3 feet of the underground system.

1.59.4 Work Clearance and Coordination Requests

Submit requests for dig clearances or building system outages and Utility connections in writing to the Contracting Officer for approval at least 30 Calendar days in advance of the time required.

1.60 LABELS

Labels shall be provided for electrical outlets and light switches. Labels shall be provided for all Add in Any Electrical Components and Junction Boxes, Mechanical Piping, HVAC Equipment, Access Doors, and Miscellaneous HVAC Equipment. Labels shall be coordinated with the COR. Samples shall be provided for acceptance.

PART 2 PRODUCTS NOT USED

PART 3 EXECUTION NOT USED

-- End of Section --

Enclosure 1

1. *Standard Identification Sign:* Note that the 8A minimum width above has been reduced from 8.5A in order to allow ample space between the text and the Army Star logo. Putting extra space between the end of the text and the .7A is permitted for the purpose of having the sign width round to the nearest foot.



2. *Construction Identification Sign:* The new Army Star logo is wider than its predecessor.



Each contractor's safety record is to be posted on Corps managed or supervised construction projects and mounted with the Construction Project Identification sign specified on page 16-2.

The graphic format, color, size and typefaces used on the sign are to be reproduced exactly as specified below. The title with First Aid logo in the top section of the sign, and the performance record captions are standard for all signs of this type. Legend groups 2 and 3 below identify the project and the contractor and are to be placed on the sign as shown.

Safety record numbers are mounted on individual metal plates and are screw-mounted to the background to allow for daily revisions to posted safety performance record.

Special applications or situations not covered in these guidelines should be referred to the district Sign Program Manager.

Legend Group 1: Standard two-line title "Safety is a Job Requirement" with 8" (outside diameter) Safety Green first aid logo.
Color: To match Pantone system 347
Typeface: 3" Helvetica Bold
Color: Black

Legend Group 2: One- to two-line project title legend describes the work being done under this contract and name of host project.
Color: Black
Typeface: 1.5" Helvetica Regular
Maximum line length: 42"

Legend Group 3: One- to two-line identification: name of prime contractor and city, state address. Color: Black
Typeface: 1.5" Helvetica Regular
Maximum line length: 42"

Legend Group 4: Standard safety record captions as shown.
Color: Black
Typeface: 1.25" Helvetica Regular

Replaceable numbers are to be mounted on white .060 aluminum plates and screw-mounted to background.
Color: Black
Typeface: 3" Helvetica Regular
Plate size: 2.5" x 4.5"

All typography is flush left and rag right, upper and lower case with initial capitals only as shown. Letter- and word-spacing to follow Corps standards as specified in Appendix D.

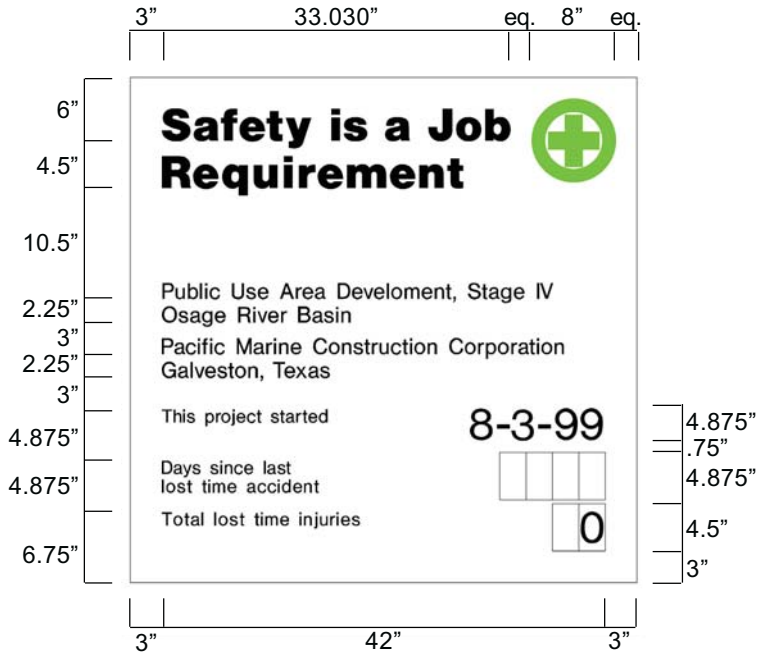

Sign Type	Legend Size (A)	Panel Size	Post Size	Specification Code	Mounting Height	Color Bkg/Lgd
CID-02	various	4'x4'	4"x4"	HDO-3	48"	WH/BK-SG

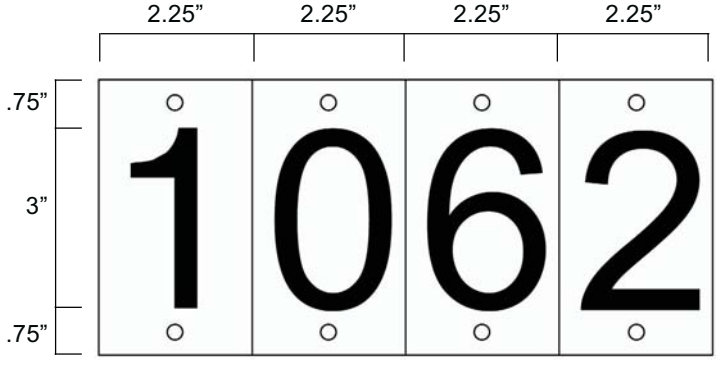

All Construction Project Identification signs and Safety Performance signs are to be fabricated and installed as described below. The signs are to be erected at a location designated by the contracting officer representative and shall conform to the size, format, and typographic standards shown on pages16-2 thru 16-4. Detailed specifications for HDO plywood panel preparation are provided in Appendix B.

Shown below the mounting diagram is a panel layout grid with spaces provided for project information. Photocopy this page and use as a worksheet when preparing sign legend orders.

For additional information on the proper method to prepare sign panel graphics, contact the district Sign Program Manager.

The sign panels are to be fabricated from .75" High Density Overlay Plywood. Panel preparation to follow HDO specifications provided in Appendix B.

Sign graphics to be prepared on a white nonreflective vinyl film with positionable adhesive backing.

All graphics except for the Communication Red background with Corps Signature on the project sign are to be die-cut or computer-cut nonreflective vinyl, prespaced legends prepared in the sizes and typefaces specified and applied to the background panel following the graphic formats shown on pages 16-2 and 16-3.

The 2'x 4' Communication Red panel (to match Pantone system 032) with full Corps Signature (reverse version) is to be screen-printed on the white background. Identification of the district or division may be applied under the signature with white cut vinyl letters prepared to Corps standards.

Drill and insert six (6) .375" T-nuts from the front face of the HDO sign panel. Position holes as shown. Flange of T-nut to be flush with sign face.

Apply graphic panel to prepared HDO plywood panel following manufacturers' instructions.

Sign uprights to be structural grade 4" x 4" treated Douglas Fir or Southern Yellow Pine, No.1 or better. Post to be 12' long. Drill six (6) .375" mounting holes in uprights to align with T-nuts in sign panel. Countersink (.5") back of hole to accept socket head cap screw (4" x .375").

Assemble sign panel and uprights. Imbed assembled sign panel and uprights in 4' hole. Local soil conditions and/or wind loading may require bolting additional 2" x 4" struts on inside face of uprights to reinforce installation as shown.

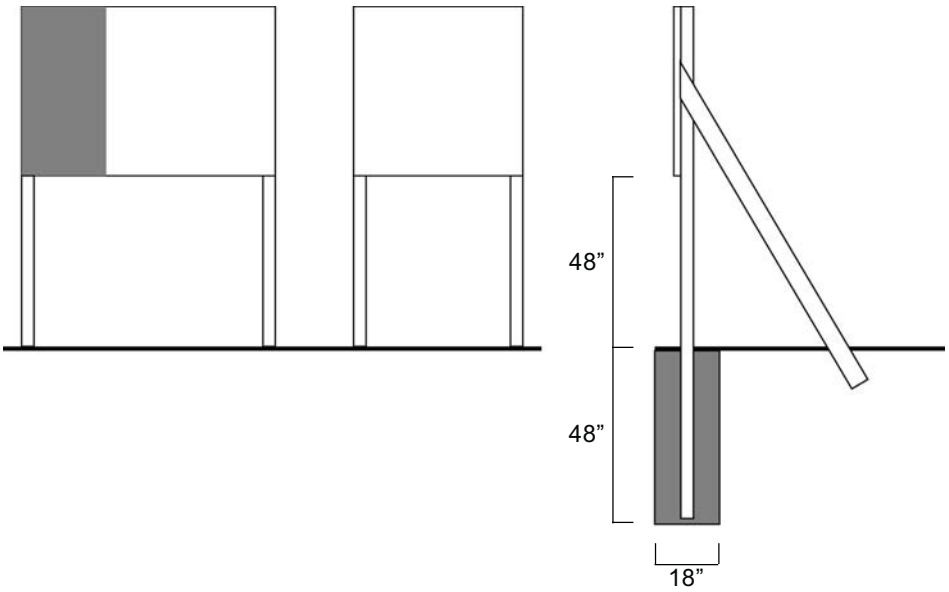

Construction Project Identification Sign
Legend Group 1: Corps Relationship

1. _____
2. _____

Legend Group 2: Division/District Name

1. _____
2. _____

Legend Group 2a: Military/Civil Works Sponsor

1. _____
2. _____

Legend Group 3: Project Title

1. _____
2. _____
3. _____

Legend Group 4: Facility Name

1. _____
2. _____

Legend Group 5: Contractor/A&E

1. _____
2. _____
3. _____
4. _____
5. _____

Legend Group 5b: Contractor/A&E

1. _____
2. _____
3. _____
4. _____
5. _____

Safety Performance Sign
Legend Group 2: Project Title

1. _____
2. _____

Legend Group 3: Contractor/A&E

1. _____
2. _____

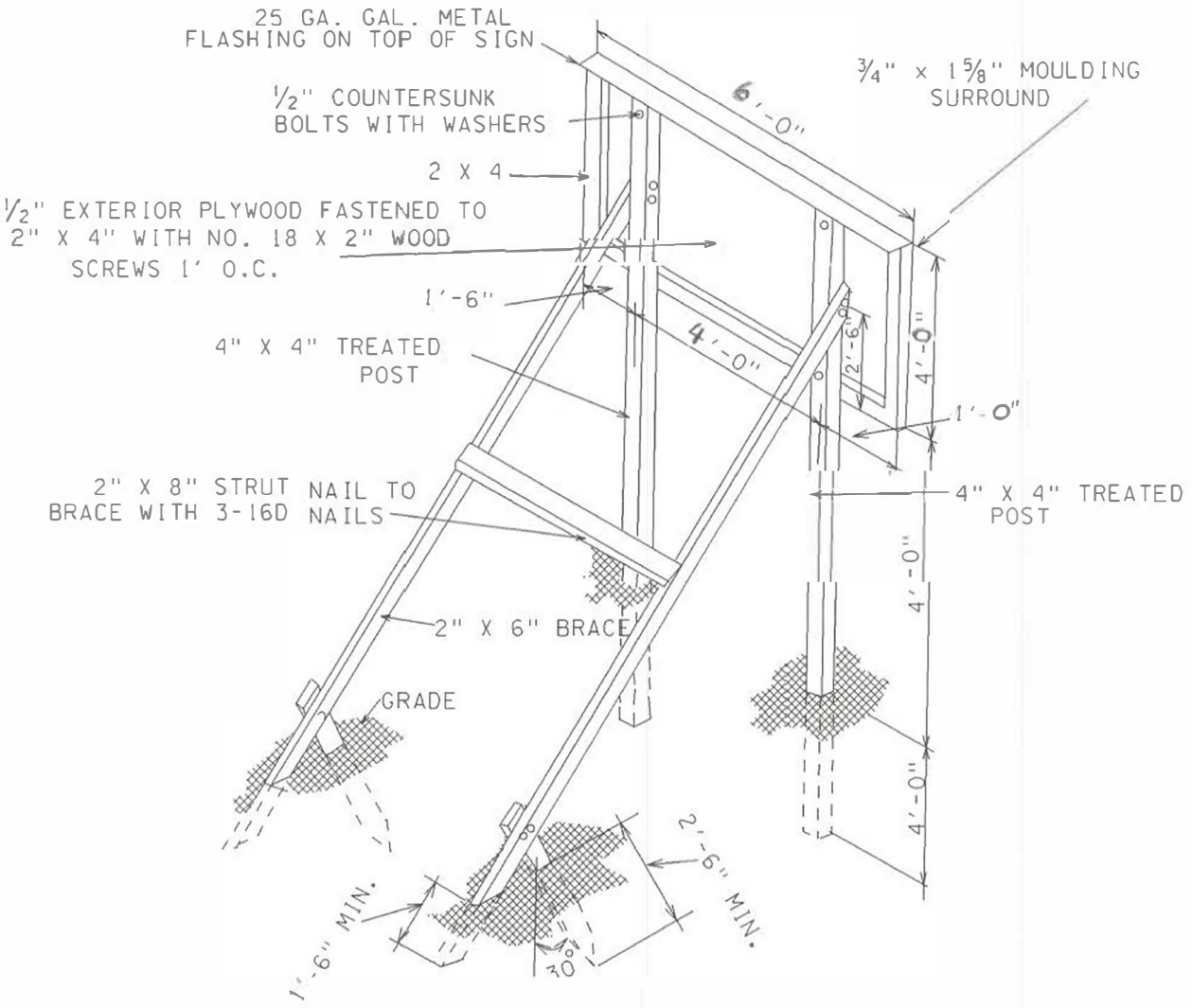

CONSTRUCTION SIGN ISOMETRIC

ERECTION DETAILS

FILE: C:°TEMP°SIGN.DGN
DATE: 23-Feb-00 13:55

SUBMITTAL REGISTER

CONTRACT NO. W912QR26BA021_Specs_Vol1-0000

TITLE AND LOCATION
DSCC DLA REPAIR BUILDING 27 - Columbus, OH P2# 519087

CONTRACTOR

ACTIVITY NO	TRANSMITTAL NO	SPEC SECT	DESCRIPTION ITEM SUBMITTED	PARAG # RAPH	CLASSIFICATION	GOVT OR A/E REVWR	CONTRACTOR: SCHEDULE DATES			CONTRACTOR ACTION			APPROVING AUTHORITY					MAILED TO CONTR/ DATE RCD FRM APPR AUTH	REMARKS
							SUBMIT	APPROVAL NEEDED BY	MATERIAL NEEDED BY	ACTION CODE	DATE OF ACTION	DATE FWD TO APPR AUTH/ DATE RCD FROM CONTR	DATE FWD TO OTHER REVIEWER	DATE RCD FROM OTH REVIEWER	ACTION CODE	DATE OF ACTION		
(a)	(b)	(c)	(d)	(e)	(f)		(g)	(h)	(i)	(j)	(k)	(l)	(m)	(n)	(o)	(p)		(q)	(r)
		00 80 00.00 06	SD-02 Shop Drawings																
			Mechanical/Electrical Room	1.41	G														
			Layout																
			SD-04 Samples																
			Equipment Warranty Identification	1.16	G														
			Tags																
			SD-05 Design Data																
			SF1413 Statement And	1.12															
			Acknowledgement																
			Progress Photographs	1.45															
			SD-07 Certificates																
			Warranty of Construction	1.16															
			NO ASBESTOS - CONTAINING	1.15	G														
			MATERIAL (ACM)																
			CERTIFICATION																
			Insurance	1.32															
			Sales and Use Tax	1.30															
			SD-11 Closeout Submittals																
			Preliminary (Working) As-Built	1.7.4	G														
			Drawings																
			Final As-Built Drawings	1.7.1	G														
			CAD Working As-Built Drawings	1.7.1.2	G														
			Equipment-in-Place List	1.9.1															
			Maintenance and Parts Data	1.9.1															
			Warranty Management Plan	1.16	G														
		01 11 00	SD-01 Preconstruction Submittals																

SUBMITTAL REGISTER

CONTRACT NO. W912QR26BA021_Specs_Vol1-0000

TITLE AND LOCATION
DSCC DLA REPAIR BUILDING 27 - Columbus, OH P2# 519087

CONTRACTOR

ACTIVITY NO	TRANSMITTAL NO	SPEC SECT	DESCRIPTION ITEM SUBMITTED	PARAG # RAPH	CLASSIFICATION	GOVT OR A/E REVWR	CONTRACTOR: SCHEDULE DATES			CONTRACTOR ACTION			APPROVING AUTHORITY					REMARKS
							SUBMIT	APPROVAL NEEDED BY	MATERIAL NEEDED BY	ACTION CODE	DATE OF ACTION	DATE FWD TO APPR AUTH/ DATE RCD FROM CONTR	DATE FWD TO OTHER REVIEWER	DATE RCD FROM OTH REVIEWER	ACTION CODE	DATE OF ACTION	MAILED TO CONTR/ DATE RCD FRM APPR AUTH	
(a)	(b)	(c)	(d)	(e)	(f)		(g)	(h)	(i)	(j)	(k)	(l)	(m)	(n)	(o)	(p)	(q)	(r)
		01 11 00	Sequencing And Scheduling Plan	1.3	G													
		01 32 01.00 06	SD-01 Preconstruction Submittals															
			Project Scheduler Qualifications	1.3	G													
			Preliminary Project Schedule	3.4.1	G													
			Initial Project Schedule	3.4.2	G													
			Periodic Schedule Update	3.6.2	G													
		01 33 00	SD-01 Preconstruction Submittals															
			Submittal Register	1.8	G													
		01 35 26.00 06	SD-01 Preconstruction Submittals															
			Accident Prevention Plan (APP)	1.7														
			Bloodborne Pathogen Plan															
			Exposure Control Plan															
			Hearing Conservation Program															
			Respiratory Protection Plan															
			Health Hazard Control Program															
			Hazard Communication Program															
			Lead Compliance Plan & Specifications															
			Asbestos Abatement Plan & Specifications															
			Heat Stress Monitoring Plan															
			Cold Stress Monitoring Plan															
			Indoor Air Quality Management Plan															
			Mold Remediation Plan															
			Crystalline Silica Assessment															

SUBMITTAL REGISTER

CONTRACT NO. W912QR26BA021_Specs_Vol1-0000

TITLE AND LOCATION
DSCC DLA REPAIR BUILDING 27 - Columbus, OH P2# 519087

CONTRACTOR

ACTIVITY NO	TRANSMITTAL NO	SPEC SECT	DESCRIPTION ITEM SUBMITTED	PARAG # RAPH	CLASSIFICATION	GOVT OR A/E REVWR	CONTRACTOR: SCHEDULE DATES			CONTRACTOR ACTION			APPROVING AUTHORITY						
							SUBMIT	APPROVAL NEEDED BY	MATERIAL NEEDED BY	ACTION CODE	DATE OF ACTION	DATE FWD TO APPR AUTH/ DATE RCD FROM CONTR	DATE FWD TO OTHER REVIEWER	DATE RCD FROM OTH REVIEWER	ACTION CODE	DATE OF ACTION	MAILED TO CONTR/ DATE RCD FRM APPR AUTH	REMARKS
(a)	(b)	(c)	(d)	(e)	(f)		(g)	(h)	(i)	(j)	(k)	(l)	(m)	(n)	(o)	(p)	(q)	(r)
		01 35 26.00 06	Fire Prevention Plan															
			Hazardous Energy Control Plan															
			Standard Pre-Lift Plan (LHE)															
			Critical Lift Plan - LHE															
			Fall Protection and Prevention Plan															
			Demolition/Renovation Plan (to include engineering survey)															
			Excavation/Trenching Plan															
			Steel Erection Plan															
			SD-06 Test Reports															
			Reports	1.12														
			Accident/Mishap Investigation Reports															
			Monthly Exposure Reports	1.12.3														
			Regulatory Citations and Violations	1.12.4														
			SD-07 Certificates															
			Confined Space Entry Permit	1.12.8														
			Hot work permit	1.13														
		01 45 04.10 06	SD-01 Preconstruction Submittals															
			Construction Quality Control Plan	3.3	G	RO												
		01 45 35	SD-01 Preconstruction Submittals															
			SIOR Letter of Acceptance	3.1.1	G													
			Project Manual	3.1.1	G													
			Written NDT Practices	3.1.1														

SUBMITTAL REGISTER

CONTRACT NO. W912QR26BA021_Specs_Vol1-0000

TITLE AND LOCATION
DSCC DLA REPAIR BUILDING 27 - Columbus, OH P2# 519087

CONTRACTOR

ACTIVITY NO	TRANSMITTAL NO	SPEC SECT	DESCRIPTION ITEM SUBMITTED	PARAG # RAPH	CLASSIFICATION	GOVT OR A/E REVWR	CONTRACTOR: SCHEDULE DATES			CONTRACTOR ACTION			APPROVING AUTHORITY					REMARKS
							SUBMIT	APPROVAL NEEDED BY	MATERIAL NEEDED BY	ACTION CODE	DATE OF ACTION	DATE FWD TO APPR AUTH/ DATE RCD FROM CONTR	DATE FWD TO OTHER REVIEWER	DATE RCD FROM OTH REVIEWER	ACTION CODE	DATE OF ACTION	MAILED TO CONTR/ DATE RCD FRM APPR AUTH	
(a)	(b)	(c)	(d)	(e)	(f)		(g)	(h)	(i)	(j)	(k)	(l)	(m)	(n)	(o)	(p)	(q)	(r)
		01 45 35	SD-06 Test Reports															
			Special Inspection Daily Reports	3.1.1														
			Special Inspection Daily Reports	3.1.2														
			Special Inspection Daily Reports	3.1.3														
			Special Inspection Daily Reports	3.1.3														
			Special Inspection Biweekly	3.1.1														
			Reports															
			Special Inspection Biweekly	3.1.2														
			Reports															
			SD-07 Certificates															
			AISC Certified Steel Fabricator															
			Special Inspector of Record	1.5	G													
			Special Inspector	1.5	G													
			Qualification Records for	3.1.1														
			Nondestructive Testing															
			Technicians															
			SD-11 Closeout Submittals															
			Interim Report		G													
			Comprehensive Final Report	3.1.1	G													
			Comprehensive Final Report	3.1.3	G													
			Final Report		G													
		01 50 00	SD-01 Preconstruction Submittals															
			Construction Site Plan	1.3	G													
			Traffic Control Plan	3.3.1	G													

SUBMITTAL REGISTER

CONTRACT NO. W912QR26BA021_Specs_Vol1-0000

TITLE AND LOCATION
DSCC DLA REPAIR BUILDING 27 - Columbus, OH P2# 519087

CONTRACTOR

ACTIVITY NO	TRANSMITTAL NO	SPEC SECT	DESCRIPTION ITEM SUBMITTED	PARAG # RAPH	CLASSIFICATION	GOVT OR A/E REVWR	CONTRACTOR: SCHEDULE DATES			CONTRACTOR ACTION			APPROVING AUTHORITY					REMARKS
							SUBMIT	APPROVAL NEEDED BY	MATERIAL NEEDED BY	ACTION CODE	DATE OF ACTION	DATE FWD TO APPR AUTH/ DATE RCD FROM CONTR	DATE FWD TO OTHER REVIEWER	DATE RCD FROM OTH REVIEWER	ACTION CODE	DATE OF ACTION	MAILED TO CONTR/ DATE RCD FRM APPR AUTH	
(a)	(b)	(c)	(d)	(e)	(f)		(g)	(h)	(i)	(j)	(k)	(l)	(m)	(n)	(o)	(p)	(q)	(r)
		01 50 00	Contractor Computer	1.6.1.4	G													
			Cybersecurity Compliance															
			Statements															
			Contractor Temporary Network	1.6.6	G													
			Cybersecurity Compliance															
			Statements															
			SD-06 Test Reports															
			Backflow Preventer Tests	3.4														
			SD-07 Certificates															
			Backflow Tester	1.4.1														
			Backflow Preventers	1.4														
		01 57 19.00 06	SD-01 Preconstruction Submittals															
			Preconstruction Survey	1.6.1														
			Solid Waste Management Permit	1.11	G													
			Regulatory Notifications	1.6.2	G													
			Environmental Protection Plan	1.7	G													
			Dirt and Dust Control Plan	1.7.9.1	G													
			Employee Training Records	1.6.5	G													
			Environmental Manager	1.6.4	G													
			Qualifications															
			SD-06 Test Reports															
			Laboratory Analysis															
			Inspection Reports	3.2.2.2														
			Solid Waste Management Report	3.7.2.1	G													
			SD-07 Certificates															
			Employee Training Records	1.6.5	G													

SUBMITTAL REGISTER

CONTRACT NO. W912QR26BA021_Specs_Vol1-0000

TITLE AND LOCATION
DSCC DLA REPAIR BUILDING 27 - Columbus, OH P2# 519087

CONTRACTOR

ACTIVITY NO	TRANSMITTAL NO	SPEC SECT	DESCRIPTION ITEM SUBMITTED	PARAGRAPH #	CLASSIFICATION	GOVT OR A/E REVWR	CONTRACTOR: SCHEDULE DATES			CONTRACTOR ACTION			APPROVING AUTHORITY					MAILED TO CONTR/ DATE RCD FRM APPR AUTH	REMARKS
							SUBMIT	APPROVAL NEEDED BY	MATERIAL NEEDED BY	ACTION CODE	DATE OF ACTION	DATE FWD TO APPR AUTH/ DATE RCD FROM CONTR	DATE FWD TO OTHER REVIEWER	DATE RCD FROM OTH REVIEWER	ACTION CODE	DATE OF ACTION		
(a)	(b)	(c)	(d)	(e)	(f)		(g)	(h)	(i)	(j)	(k)	(l)	(m)	(n)	(o)	(p)		(q)	(r)
		01 57 19.00 06	Certificate of Competency																
			SD-11 Closeout Submittals																
			Waste Determination	3.7.1	G														
			Documentation																
			Disposal Documentation for	3.7.4.6	G														
			Hazardous and Regulated Waste																
			Assembled Employee Training	1.6.5	G														
			Records																
			Solid Waste Management Permit	1.11	G														
			Solid Waste Management Report	3.7.2.1	G														
			Hazardous Waste/Debris	3.7.4.1	G														
			Management																
			Regulatory Notifications	1.6.2	G														
			Sales Documentation	3.7.2.1	G														
			Contractor Certification	3.7.2.1															
			As-Built Topographic Survey																
		01 74 19	SD-01 Preconstruction Submittals																
			Construction Waste Management	1.6	G														
			Plan																
			SD-06 Test Reports																
			Quarterly Reports	1.8.2															
			Annual Report	1.8.3															
			SD-11 Closeout Submittals																
			Final Construction Waste	1.9	S														
			Diversion Report																

SUBMITTAL REGISTER

CONTRACT NO. W912QR26BA021_Specs_Vol1-0000

TITLE AND LOCATION
DSCC DLA REPAIR BUILDING 27 - Columbus, OH P2# 519087

CONTRACTOR

ACTIVITY NO	TRANSMITTAL NO	SPEC SECT	DESCRIPTION ITEM SUBMITTED	PARAG # RAPH	CLASSIFICATION	GOVT OR A/E REVWR	CONTRACTOR: SCHEDULE DATES			CONTRACTOR ACTION			APPROVING AUTHORITY					REMARKS
							SUBMIT	APPROVAL NEEDED BY	MATERIAL NEEDED BY	ACTION CODE	DATE OF ACTION	DATE FWD TO APPR AUTH/ DATE RCD FROM CONTR	DATE FWD TO OTHER REVIEWER	DATE RCD FROM OTH REVIEWER	ACTION CODE	DATE OF ACTION	MAILED TO CONTR/ DATE RCD FRM APPR AUTH	
(a)	(b)	(c)	(d)	(e)	(f)		(g)	(h)	(i)	(j)	(k)	(l)	(m)	(n)	(o)	(p)	(q)	(r)
		01 78 23	SD-10 Operation and Maintenance															
			Data															
			Facility Data Workbook	1.4	G													
			Training Plan	3.1.1	G													
			Training Outline	3.1.3	G													
			Training Content	3.1.2	G													
			Operation And Maintenance	3.2.1	G													
			Manual, Progress Submittal															
			Operation And Maintenance	3.2.2	G													
			Manual, Prefinal Submittal															
			Operation And Maintenance	3.2.3	G													
			Manual, Final Submittal															
			SD-11 Closeout Submittals															
			Training Video Recording	3.1.4	G													
			Validation of Training Completion	3.1.6	G													
			Training Plan	3.1.1	G													
			Record Drawings And Utility	1.6.6.7	G													
			Systems															
		01 91 00.15	SD-06 Test Reports															
			Completed Construction	3.7	G													
			Observation Checklists															
			Design Review Report		G													
			Interim Construction Phase	3.5	G													
			Commissioning Plan															
			Final Construction Phase	3.5	G													
			Commissioning Plan															

SUBMITTAL REGISTER

CONTRACT NO. W912QR26BA021_Specs_Vol1-0000

TITLE AND LOCATION
DSCC DLA REPAIR BUILDING 27 - Columbus, OH P2# 519087

CONTRACTOR

ACTIVITY NO	TRANSMITTAL NO	SPEC SECT	DESCRIPTION ITEM SUBMITTED	PARAG # RAPH	CLASSIFICATION	GOVT OR A/E REVWR	CONTRACTOR: SCHEDULE DATES			CONTRACTOR ACTION			APPROVING AUTHORITY					MAILED TO CONTR/ DATE RCD FRM APPR AUTH	REMARKS
							SUBMIT	APPROVAL NEEDED BY	MATERIAL NEEDED BY	ACTION CODE	DATE OF ACTION	DATE FWD TO APPR AUTH/ DATE RCD FROM CONTR	DATE FWD TO OTHER REVIEWER	DATE RCD FROM OTH REVIEWER	ACTION CODE	DATE OF ACTION		
(a)	(b)	(c)	(d)	(e)	(f)		(g)	(h)	(i)	(j)	(k)	(l)	(m)	(n)	(o)	(p)	(q)	(r)
		01 91 00.15	Issues Log	1.13	G													
			SD-07 Certificates															
			Commissioning Firm	1.10	G													
			Certificate of Readiness	1.14	G													
			SD-10 Operation and Maintenance															
			Data															
			Maintenance and Service Life	3.11	G													
			Plan															
			Systems Manual	3.10	G													
			SD-11 Closeout Submittals															
			Final Commissioning Report	3.12	G													
			Updated Final Commissioning		G													
			Report															
		02 41 00	SD-01 Preconstruction Submittals															
			Demolition Plan	1.2.2	G													
			Deconstruction Plan	1.2.2	G													
			Existing Conditions	1.10														
			SD-07 Certificates															
			Notification	1.7	G													
			SD-11 Closeout Submittals															
			Receipts	3.3.2														
		02 82 00	SD-03 Product Data															
			Amended Water	1.2.2	G													
			Safety Data Sheets (SDS) for All	1.3.9	G													
			Materials															
			Encapsulants	2.1	G													

SUBMITTAL REGISTER

CONTRACT NO. W912QR26BA021_Specs_Vol1-0000

TITLE AND LOCATION
DSCC DLA REPAIR BUILDING 27 - Columbus, OH P2# 519087

CONTRACTOR

ACTIVITY NO	TRANSMITTAL NO	SPEC SECT	DESCRIPTION ITEM SUBMITTED	PARAGRAPH #	CLASSIFICATION	GOVT OR A/E REVWR	CONTRACTOR: SCHEDULE DATES			CONTRACTOR ACTION			APPROVING AUTHORITY					MAILED TO CONTR/ DATE RCD FRM APPR AUTH	REMARKS
							SUBMIT	APPROVAL NEEDED BY	MATERIAL NEEDED BY	ACTION CODE	DATE OF ACTION	DATE FWD TO APPR AUTH/ DATE RCD FROM CONTR	DATE FWD TO OTHER REVIEWER	DATE RCD FROM OTH REVIEWER	ACTION CODE	DATE OF ACTION		
(a)	(b)	(c)	(d)	(e)	(f)		(g)	(h)	(i)	(j)	(k)	(l)	(m)	(n)	(o)	(p)	(q)	(r)
		02 82 00	Respirators	3.1.2.1	G													
			Local Exhaust Equipment	3.1.7	G													
			Pressure Differential Automatic	3.1.7	G													
			Recording Instrument															
			Vacuums	3.1.8	G													
			Glovebags	3.1.10	G													
			SD-06 Test Reports															
			Air Sampling Results	1.5.5	G													
			Pressure Differential Recordings	1.5.6	G													
			for Local Exhaust System															
			Encapsulation Test Patches		G													
			Clearance Sampling	3.2.14.5	G													
			Asbestos Disposal Quantity	3.3.3.2	G													
			Report															
			SD-07 Certificates															
			Employee Training	1.3.4	G													
			Notifications	1.3.5	G													
			Respiratory Protection Program	1.3.7	G													
			Asbestos Hazard Abatement Plan	1.3.10	G													
			Testing Laboratory	1.3.11	G													
			Landfill Approval	1.3.12	G													
			Delivery Tickets	1.3.12	G													
			Waste Shipment Records	1.3.12	G													
			Transporter Certification	1.3.13	G													
			Medical Certification	1.3.14	G													

SUBMITTAL REGISTER

CONTRACT NO. W912QR26BA021_Specs_Vol1-0000

TITLE AND LOCATION
DSCC DLA REPAIR BUILDING 27 - Columbus, OH P2# 519087

CONTRACTOR

ACTIVITY NO	TRANSMITTAL NO	SPEC SECT	DESCRIPTION ITEM SUBMITTED	PARAGRAPH #	CLASSIFICATION	GOVT OR A/E REVWR	CONTRACTOR: SCHEDULE DATES			CONTRACTOR ACTION			APPROVING AUTHORITY					MAILED TO CONTR/ DATE RCD FRM APPR AUTH	REMARKS
							SUBMIT	APPROVAL NEEDED BY	MATERIAL NEEDED BY	ACTION CODE	DATE OF ACTION	DATE FWD TO APPR AUTH/ DATE RCD FROM CONTR	DATE FWD TO OTHER REVIEWER	DATE RCD FROM OTH REVIEWER	ACTION CODE	DATE OF ACTION		
(a)	(b)	(c)	(d)	(e)	(f)		(g)	(h)	(i)	(j)	(k)	(l)	(m)	(n)	(o)	(p)	(q)	(r)
		02 82 00	Private Qualified Person	1.5.1	G													
			Documentation															
			Designated Competent Person	1.5.2	G													
			Worker's License	1.5.3	G													
			Contractor's License	1.5.4	G													
			Federal, State or Local Citations	1.5.9	G													
			on Previous Projects															
			Encapsulants	2.1	G													
			Equipment Used to Contain	3.1	G													
			Airborne Asbestos Fibers															
			Water Filtration Equipment	3.1.3.3	G													
			Vacuums	3.1.8	G													
			Ventilation Systems	3.1.8	G													
			SD-11 Closeout Submittals															
			Permitsand Licenses	1.3.5	G													
			Notifications	1.3.5	G													
			Respirator Program Records	1.3.7.1	G													
			Protective Clothing	1.5.7	G													
			Decontamination Quality Control															
			Records															
			Protective Clothing	1.5.8	G													
			Decontamination Facility															
			Notification															
			Rental Equipment	1.7.1	G													
		02 83 00	SD-01 Preconstruction Submittals															
			Competent Person	1.5.1.1	G													

SUBMITTAL REGISTER

CONTRACT NO. W912QR26BA021_Specs_Vol1-0000

TITLE AND LOCATION
DSCC DLA REPAIR BUILDING 27 - Columbus, OH P2# 519087

CONTRACTOR

ACTIVITY NO	TRANSMITTAL NO	SPEC SECT	DESCRIPTION ITEM SUBMITTED	PARAG # RAPH	CLASSIFICATION	GOVT OR A/E REVWR	CONTRACTOR: SCHEDULE DATES			CONTRACTOR ACTION			APPROVING AUTHORITY					REMARKS
							SUBMIT	APPROVAL NEEDED BY	MATERIAL NEEDED BY	ACTION CODE	DATE OF ACTION	DATE FWD TO APPR AUTH/ DATE RCD FROM CONTR	DATE FWD TO OTHER REVIEWER	DATE RCD FROM OTH REVIEWER	ACTION CODE	DATE OF ACTION	MAILED TO CONTR/ DATE RCD FRM APPR AUTH	
(a)	(b)	(c)	(d)	(e)	(f)		(g)	(h)	(i)	(j)	(k)	(l)	(m)	(n)	(o)	(p)	(q)	(r)
		02 83 00	Training Certification	1.5.1.2	G													
			Occupational and Environmental	1.5.2.3	G													
			Assessment Data Report															
			Medical Examinations	1.5.2.4	G													
			Lead, Cadmium, Chromium	1.5.2.8	G													
			Waste Management Plan															
			Licenses, Permits and	1.5.4	G													
			Notifications															
			Occupant Protection Plan	1.5.5	G													
			Lead, Cadmium, Chromium	1.5.2.2	G													
			Compliance Plan															
			Lead, Cadmium, Chromium	3.1.1.6	G													
			Compliance Plan															
			Initial Sample Results	3.4.1.1	G													
			Written Evidence of TSD	3.5.2.1	G													
			Approval															
			SD-03 Product Data															
			Respirators	1.6.1	G													
			Vacuum Filters	1.6.4	G													
			Negative Air Pressure System	1.6.7	G													
			Materials and Equipment	2.1	G													
			Expendable Supplies	2.1.1	G													
			Local Exhaust Equipment	3.1.1.5	G													
			Pressure Differential Automatic	3.1.1.5	G													
			Recording Instrument															
			Pressure Differential Log	3.1.1.6	G													

SUBMITTAL REGISTER

CONTRACT NO. W912QR26BA021_Specs_Vol1-0000

TITLE AND LOCATION
DSCC DLA REPAIR BUILDING 27 - Columbus, OH P2# 519087

CONTRACTOR

ACTIVITY NO	TRANSMITTAL NO	SPEC SECT	DESCRIPTION ITEM SUBMITTED	PARAGRAPH #	CLASSIFICATION	GOVT OR A/E REVWR	CONTRACTOR: SCHEDULE DATES			CONTRACTOR ACTION			APPROVING AUTHORITY					REMARKS
							SUBMIT	APPROVAL NEEDED BY	MATERIAL NEEDED BY	ACTION CODE	DATE OF ACTION	DATE FWD TO APPR AUTH/ DATE RCD FROM CONTR	DATE FWD TO OTHER REVIEWER	DATE RCD FROM OTH REVIEWER	ACTION CODE	DATE OF ACTION	MAILED TO CONTR/ DATE RCD FRM APPR AUTH	
(a)	(b)	(c)	(d)	(e)	(f)		(g)	(h)	(i)	(j)	(k)	(l)	(m)	(n)	(o)	(p)	(q)	(r)
		02 83 00	SD-06 Test Reports															
			Occupational and Environmental	1.5.2.3	G													
			Assessment Data Report															
			Sampling Results	1.5.2.3	G													
			Pressure Differential Recordings	1.5.3	G													
			For Local Exhaust System															
			SD-07 Certificates															
			Testing Laboratory	1.5.1.3	G													
			Third Party Consultant	1.5.1.4	G													
			Qualifications															
			Occupant Notification	3.1.1.1	G													
			Notification of the	3.1.1.1	G													
			Commencement of LBP Hazard															
			Abatement															
			Clearance Certification	3.5.1.1	G													
			SD-11 Closeout Submittals															
			Hazardous Waste Manifest	3.5.2.1	G													
			Turn-In Documents or Weight	3.5.2.1	G													
			Tickets															
		02 84 16	SD-07 Certificates															
			Qualifications of CIH	1.8.1	G													
			Training Certification	1.8.1	G													
			PCB and Lamp Removal Work	1.8.2	G													
			Plan															
			PCB and Lamp Disposal Plan	1.8.3	G													
			SD-11 Closeout Submittals															

SUBMITTAL REGISTER

CONTRACT NO. W912QR26BA021_Specs_Vol1-0000

TITLE AND LOCATION
DSCC DLA REPAIR BUILDING 27 - Columbus, OH P2# 519087

CONTRACTOR

ACTIVITY NO	TRANSMITTAL NO	SPEC SECT	DESCRIPTION ITEM SUBMITTED	PARAG # RAPH	CLASSIFICATION	GOVT OR A/E REVWR	CONTRACTOR: SCHEDULE DATES			CONTRACTOR ACTION			APPROVING AUTHORITY					REMARKS
							SUBMIT	APPROVAL NEEDED BY	MATERIAL NEEDED BY	ACTION CODE	DATE OF ACTION	DATE FWD TO APPR AUTH/ DATE RCD FROM CONTR	DATE FWD TO OTHER REVIEWER	DATE RCD FROM OTH REVIEWER	ACTION CODE	DATE OF ACTION	MAILED TO CONTR/ DATE RCD FRM APPR AUTH	
(a)	(b)	(c)	(d)	(e)	(f)		(g)	(h)	(i)	(j)	(k)	(l)	(m)	(n)	(o)	(p)	(q)	(r)
		02 84 16	Transporter Certification	3.5.2	G													
			Certification of Decontamination	3.2.4														
			Certificate of Disposal and/or	3.5.2.1														
			recycling															
			DD Form 1348-1	3.5.3.2														
			Testing Results	3.3.1														
		03 30 00	SD-01 Preconstruction Submittals															
			Concrete Curing Plan	1.6.3.1														
			Quality Control Organizational	1.6.6														
			Chart															
			Laboratory Accreditation	1.6.8	G													
			Maturity Method Data	3.3.8														
			SD-02 Shop Drawings															
			Formwork	1.6.2.1														
			Reinforcing Steel	1.6.2.2	G													
			SD-03 Product Data															
			Joint Sealants	2.4.5	S													
			Joint Filler	2.4.4	S													
			Formwork Materials	2.1														
			Recycled Aggregate Materials		S													
			Cementitious Materials	2.3.1	S													
			Vapor Retarder and Vapor Barrier															
			Concrete Curing Materials	2.4.1														
			Reinforcement	2.6	S													
			Liquid Chemical Floor Hardeners	2.4.3.1														
			and Sealers															

SUBMITTAL REGISTER

CONTRACT NO. W912QR26BA021_Specs_Vol1-0000

TITLE AND LOCATION
DSCC DLA REPAIR BUILDING 27 - Columbus, OH P2# 519087

CONTRACTOR

ACTIVITY NO	TRANSMITTAL NO	SPEC SECT	DESCRIPTION ITEM SUBMITTED	PARAG # RAPH	CLASSIFICATION	GOVT OR A/E REVWR	CONTRACTOR: SCHEDULE DATES			CONTRACTOR ACTION			APPROVING AUTHORITY					MAILED TO CONTR/ DATE RCD FRM APPR AUTH	REMARKS
							SUBMIT	APPROVAL NEEDED BY	MATERIAL NEEDED BY	ACTION CODE	DATE OF ACTION	DATE FWD TO APPR AUTH/ DATE RCD FROM CONTR	DATE FWD TO OTHER REVIEWER	DATE RCD FROM OTH REVIEWER	ACTION CODE	DATE OF ACTION		
(a)	(b)	(c)	(d)	(e)	(f)		(g)	(h)	(i)	(j)	(k)	(l)	(m)	(n)	(o)	(p)		(q)	(r)
		03 30 00	Admixtures	2.3.4															
			Mechanical Reinforcing Bar	2.6.2															
			Connectors																
			Waterstops																
			Local/Regional Materials	1.8.1	S														
			Biodegradable Form Release Agent	2.2.1															
			Pumping Concrete	1.6.3.2															
			Finishing Plan	1.6.3.4															
			Nonshrink Grout	2.4.2															
			SD-04 Samples																
			Slab Finish Sample																
			Surface Finish Samples																
			SD-05 Design Data																
			Concrete Mix Design	1.6.1.1	G														
			SD-06 Test Reports																
			Concrete Mix Design	1.6.1.1	G														
			Fly Ash	1.6.4.1															
			Pozzolan	1.6.4.1															
			Slag Cement	1.6.4.2															
			Aggregates	1.6.4.3															
			Tolerance Report	3.9.2.1															
			Compressive Strength Tests	3.12.3.3	G														
			Air Content	3.12.3.4															
			Slump Tests	3.12.3.1															
			Water	2.3.2															

SUBMITTAL REGISTER

CONTRACT NO. W912QR26BA021_Specs_Vol1-0000

TITLE AND LOCATION
DSCC DLA REPAIR BUILDING 27 - Columbus, OH P2# 519087

CONTRACTOR

ACTIVITY NO	TRANSMITTAL NO	SPEC SECT	DESCRIPTION ITEM SUBMITTED	PARAGRAPH #	CLASSIFICATION	GOVT OR A/E REVWR	CONTRACTOR: SCHEDULE DATES			CONTRACTOR ACTION			APPROVING AUTHORITY					MAILED TO CONTR/ DATE RCD FRM APPR AUTH	REMARKS
							SUBMIT	APPROVAL NEEDED BY	MATERIAL NEEDED BY	ACTION CODE	DATE OF ACTION	DATE FWD TO APPR AUTH/ DATE RCD FROM CONTR	DATE FWD TO OTHER REVIEWER	DATE RCD FROM OTH REVIEWER	ACTION CODE	DATE OF ACTION		
(a)	(b)	(c)	(d)	(e)	(f)		(g)	(h)	(i)	(j)	(k)	(l)	(m)	(n)	(o)	(p)		(q)	(r)
		03 30 00	SD-07 Certificates																
			Reinforcing Bars	2.6.1															
			Welder Qualifications	1.9															
			Safety Data Sheets	1.6.3.6															
			Field Testing Technician and	1.6.6.2															
			Testing Agency																
			SD-08 Manufacturer's Instructions																
			Liquid Chemical Floor Hardeners	2.4.3.1															
			and Sealers																
			Joint Sealants	2.4.5	S														
		04 20 00	SD-02 Shop Drawings																
			Cut CMU	3.3.4.1															
			Detail Drawings	3.4.1.1															
			SD-03 Product Data																
			Hot Weather Procedures	1.5.1															
			Cold Weather Procedures	1.5.2															
			Clay or Shale Brick	2.2.2															
			Salvaged Brick	2.2.2.2															
			Cement	2.2.3.2.1															
			Cementitious Materials	2.4.1.1															
			Insulation																
			SD-04 Samples																
			Clay or Shale Brick	2.2.2															
			Concrete Masonry Units (CMU)	2.2.3.2															
			Concrete Brick																
			Admixtures for Masonry Mortar	2.4.1.3															

SUBMITTAL REGISTER

CONTRACT NO. W912QR26BA021_Specs_Vol1-0000

TITLE AND LOCATION
DSCC DLA REPAIR BUILDING 27 - Columbus, OH P2# 519087

CONTRACTOR

ACTIVITY NO	TRANSMITTAL NO	SPEC SECT	DESCRIPTION ITEM SUBMITTED	PARAGRAPH #	CLASSIFICATION	GOVT OR A/E REVWR	CONTRACTOR: SCHEDULE DATES			CONTRACTOR ACTION			APPROVING AUTHORITY					REMARKS
							SUBMIT	APPROVAL NEEDED BY	MATERIAL NEEDED BY	ACTION CODE	DATE OF ACTION	DATE FWD TO APPR AUTH/ DATE RCD FROM CONTR	DATE FWD TO OTHER REVIEWER	DATE RCD FROM OTH REVIEWER	ACTION CODE	DATE OF ACTION	MAILED TO CONTR/ DATE RCD FRM APPR AUTH	
(a)	(b)	(c)	(d)	(e)	(f)		(g)	(h)	(i)	(j)	(k)	(l)	(m)	(n)	(o)	(p)	(q)	(r)
		04 20 00	Anchors, Ties, and Bar	2.6.2														
			Positioners															
			Joint Reinforcement	2.6.3														
			Clay Masonry Expansion-Joint	2.6.6														
			Materials															
			Insulation															
			SD-05 Design Data															
			Masonry Compressive Strength	2.1.2														
			Fire-Rated Concrete Masonry															
			Units															
			SD-06 Test Reports															
			Efflorescence Test															
			Fire-Rated Concrete Masonry															
			Units															
			Field Testing of Mortar	3.6.1.1														
			Field Testing of Grout	3.6.1.2														
			Prism Tests															
			Single-Wythe Masonry Wall															
			Water Penetration Test															
			SD-07 Certificates															
			Special Masonry Inspector	1.3.1														
			Qualifications															
			Clay or Shale Brick	2.2.2														
			Concrete Masonry Units (CMU)	2.2.3.2														
			Concrete Brick															
			Cementitious Materials	2.4.1.1														

SUBMITTAL REGISTER

CONTRACT NO. W912QR26BA021_Specs_Vol1-0000

TITLE AND LOCATION
DSCC DLA REPAIR BUILDING 27 - Columbus, OH P2# 519087

CONTRACTOR

ACTIVITY NO	TRANSMITTAL NO	SPEC SECT	DESCRIPTION ITEM SUBMITTED	PARAGRAPH #	CLASSIFICATION	GOVT OR A/E REVWR	CONTRACTOR: SCHEDULE DATES			CONTRACTOR ACTION			APPROVING AUTHORITY					MAILED TO CONTR/ DATE RCD FRM APPR AUTH	REMARKS
							SUBMIT	APPROVAL NEEDED BY	MATERIAL NEEDED BY	ACTION CODE	DATE OF ACTION	DATE FWD TO APPR AUTH/ DATE RCD FROM CONTR	DATE FWD TO OTHER REVIEWER	DATE RCD FROM OTH REVIEWER	ACTION CODE	DATE OF ACTION		
(a)	(b)	(c)	(d)	(e)	(f)		(g)	(h)	(i)	(j)	(k)	(l)	(m)	(n)	(o)	(p)		(q)	(r)
		04 20 00	Admixtures for Masonry Mortar	2.4.1.3															
			Admixtures for Grout	2.4.2.2															
			Anchors, Ties, and Bar	2.6.2															
			Positioners																
			Joint Reinforcement	2.6.3															
			Insulation																
			SD-08 Manufacturer's Instructions																
			Admixtures for Masonry Mortar	2.4.1.3															
			Admixtures for Grout	2.4.2.2															
			SD-10 Operation and Maintenance																
			Data																
			Take-Back Program																
			SD-11 Closeout Submittals																
			Clay Units		S														
			Recycled Content	2.2.3.2.2	S														
		05 05 20	SD-01 Preconstruction Submittals																
			Installer Qualifications	1.5.1.1															
			Post-Installed Anchor Special	1.5.1.2															
			Inspector Qualifications																
			SD-03 Product Data																
			Mechanical Anchors in Concrete	2.1.1.3															
			Adhesive Anchor System in	2.1.1.4															
			Concrete																
			Mechanical and Adhesive	2.1.1.5															
			Anchors in Masonry																
			Non-Shrink, Non-Metallic Grout	3.1.3															

SUBMITTAL REGISTER

CONTRACT NO. W912QR26BA021_Specs_Vol1-0000

TITLE AND LOCATION
DSCC DLA REPAIR BUILDING 27 - Columbus, OH P2# 519087

CONTRACTOR

ACTIVITY NO	TRANSMITTAL NO	SPEC SECT	DESCRIPTION ITEM SUBMITTED	PARAG # RAPH	CLASSIFICATION	GOVT OR A/E REVWR	CONTRACTOR: SCHEDULE DATES			CONTRACTOR ACTION			APPROVING AUTHORITY						
							SUBMIT	APPROVAL NEEDED BY	MATERIAL NEEDED BY	ACTION CODE	DATE OF ACTION	DATE FWD TO APPR AUTH/ DATE RCD FROM CONTR	DATE FWD TO OTHER REVIEWER	DATE RCD FROM OTH REVIEWER	ACTION CODE	DATE OF ACTION	MAILED TO CONTR/ DATE RCD FRM APPR AUTH	REMARKS
(a)	(b)	(c)	(d)	(e)	(f)		(g)	(h)	(i)	(j)	(k)	(l)	(m)	(n)	(o)	(p)	(q)	(r)
		05 05 20	SD-06 Test Reports															
			Post-Installed Anchor Special	3.3.4														
			Inspections Report															
			SD-07 Certificates															
			Post-Installed Anchor	2.1.1.1														
			Certification															
			SD-08 Manufacturer’s Instructions															
			Manufacturer's Printed	2.1.1.2														
			Installation Instructions															
			Non-Shrink, Non-Metallic Grout	3.1.3														
			Manufacturer's Safety Data	1.5														
			Sheets															
		05 05 23.16	SD-01 Preconstruction Submittals															
			Welding Quality Assurance Plan	3.2														
			SD-03 Product Data															
			Welding Procedure Qualifications	1.3														
			Welder, Welding Operator, and	1.3.4														
			Tacker Qualification															
			Previous Qualifications	1.3.2														
			Pre-Qualified Procedures	1.3.3														
			Welding Electrodes and Rods	2.2														
			SD-06 Test Reports															
			Nondestructive Testing	3.3														
			Weld Inspection Log	3.2														
			SD-07 Certificates															

SUBMITTAL REGISTER

CONTRACT NO. W912QR26BA021_Specs_Vol1-0000

TITLE AND LOCATION
DSCC DLA REPAIR BUILDING 27 - Columbus, OH P2# 519087

CONTRACTOR

ACTIVITY NO	TRANSMITTAL NO	SPEC SECT	DESCRIPTION ITEM SUBMITTED	PARAGRAPH #	CLASSIFICATION	GOVT OR A/E REVWR	CONTRACTOR: SCHEDULE DATES			CONTRACTOR ACTION			APPROVING AUTHORITY					REMARKS
							SUBMIT	APPROVAL NEEDED BY	MATERIAL NEEDED BY	ACTION CODE	DATE OF ACTION	DATE FWD TO APPR AUTH/ DATE RCD FROM CONTR	DATE FWD TO OTHER REVIEWER	DATE RCD FROM OTH REVIEWER	ACTION CODE	DATE OF ACTION	MAILED TO CONTR/ DATE RCD FRM APPR AUTH	
(a)	(b)	(c)	(d)	(e)	(f)		(g)	(h)	(i)	(j)	(k)	(l)	(m)	(n)	(o)	(p)	(q)	(r)
		05 05 23.16	Certified Welding Procedure	1.3.1														
			Specifications (WPS)															
			Certified Brazing Procedure	1.3.1														
			Specifications (BPS)															
			Certified Procedure Qualification	1.3.1														
			Records (PQR)															
			Certified Welder Performance	1.3.1														
			Qualifications (WPQ)															
			Certified Brazer Performance	1.3.1														
			Qualifications (BPQ)															
			Certified Welding Inspector	1.3.5														
			Nondestructive Testing Personnel	1.3.5														
		05 50 13	SD-02 Shop Drawings															
			Installation Drawings	2.6														
			Bollards/Pipe Guards															
			Angles and Plates	2.6														
			SD-03 Product Data															
			Corner Guards	2.4														
			Cover Plates and Frames	2.5														
			Window and Door Guards															
			Downspout Terminations															
			Recycled Content		S													
			SD-04 Samples															
			Expansion Joint Covers															
		05 50 14	SD-02 Shop Drawings															
			Detail Drawings	1.3.1														

SUBMITTAL REGISTER

CONTRACT NO. W912QR26BA021_Specs_Vol1-0000

TITLE AND LOCATION
DSCC DLA REPAIR BUILDING 27 - Columbus, OH P2# 519087

CONTRACTOR

ACTIVITY NO	TRANSMITTAL NO	SPEC SECT	DESCRIPTION ITEM SUBMITTED	PARAGRAPH #	CLASSIFICATION	GOVT OR A/E REVWR	CONTRACTOR: SCHEDULE DATES			CONTRACTOR ACTION			APPROVING AUTHORITY					REMARKS
							SUBMIT	APPROVAL NEEDED BY	MATERIAL NEEDED BY	ACTION CODE	DATE OF ACTION	DATE FWD TO APPR AUTH/ DATE RCD FROM CONTR	DATE FWD TO OTHER REVIEWER	DATE RCD FROM OTH REVIEWER	ACTION CODE	DATE OF ACTION	MAILED TO CONTR/ DATE RCD FRM APPR AUTH	
(a)	(b)	(c)	(d)	(e)	(f)		(g)	(h)	(i)	(j)	(k)	(l)	(m)	(n)	(o)	(p)	(q)	(r)
		05 50 14	Welding Procedures	2.1.2.1.1														
			Welding Repair Plan	2.2.3														
			Castings															
			SD-03 Product Data															
			Filler Metal	2.1.2.1.3.1														
			Lubricant															
			SD-06 Test Reports															
			Tests, Inspections, and	2.2														
			Verifications															
			SD-07 Certificates															
			Welding Qualifications	1.3.2														
			Application Qualification for Steel															
			Studs															
			Welding of Aluminum	2.1.2.4														
			Weld Inspection Log	2.2.2.1														
			Certified Welding Inspector	2.2.2.1														
			Nondestructive Testing Personnel	2.2.2.2.1														
		05 52 00	SD-02 Shop Drawings															
			Fabrication Drawings	1.2.1	G													
			Fabrication Drawings	1.5.1	G													
			Iron and Steel Hardware	3.2	G													
			Steel Shapes, Plates, Bars and	3.2	G													
			Strips															
			SD-03 Product Data															
			Concrete Inserts		G													
			Masonry Anchorage Devices		G													

SUBMITTAL REGISTER

CONTRACT NO. W912QR26BA021_Specs_Vol1-0000

TITLE AND LOCATION
DSCC DLA REPAIR BUILDING 27 - Columbus, OH P2# 519087

CONTRACTOR

ACTIVITY NO	TRANSMITTAL NO	SPEC SECT	DESCRIPTION ITEM SUBMITTED	PARAG # RAPH	CLASSIFICATION	GOVT OR A/E REVWR	CONTRACTOR: SCHEDULE DATES			CONTRACTOR ACTION			APPROVING AUTHORITY					REMARKS
							SUBMIT	APPROVAL NEEDED BY	MATERIAL NEEDED BY	ACTION CODE	DATE OF ACTION	DATE FWD TO APPR AUTH/ DATE RCD FROM CONTR	DATE FWD TO OTHER REVIEWER	DATE RCD FROM OTH REVIEWER	ACTION CODE	DATE OF ACTION	MAILED TO CONTR/ DATE RCD FRM APPR AUTH	
(a)	(b)	(c)	(d)	(e)	(f)		(g)	(h)	(i)	(j)	(k)	(l)	(m)	(n)	(o)	(p)	(q)	(r)
		05 52 00	Protective Coating	2.1.3	G													
			Steel Railings and Handrails		G													
			Aluminum Railings and Handrails		G													
			Anchorage and Fastening	1.2.1	G													
			Systems															
			SD-05 Design Data															
			Design Calculations For Steel		G													
			Connections															
			SD-06 Test Reports															
			Welding Inspections	1.4.1	G													
			Mill Test Reports	2.3	G													
			SD-07 Certificates															
			Welder Qualification	1.4.2	G													
			SD-08 Manufacturer’s Instructions															
			Installation Instructions	3.2														
		06 10 00	SD-02 Shop Drawings															
			Modifications of Structural	1.9.2														
			Members															
			Nailing Strips	2.2.1														
			SD-03 Product Data															
			Plastic Lumber															
			Fiberboard Wall Sheathing															
			Cellulose Honeycomb Panels															
			Fire-retardant Treatment	1.8														
			Structural-use and OSB Panels															
			Oriented Strand Board	2.3														

SUBMITTAL REGISTER

CONTRACT NO. W912QR26BA021_Specs_Vol1-0000

TITLE AND LOCATION
DSCC DLA REPAIR BUILDING 27 - Columbus, OH P2# 519087

CONTRACTOR

ACTIVITY NO	TRANSMITTAL NO	SPEC SECT	DESCRIPTION ITEM SUBMITTED	PARAG # RAPH	CLASSIFICATION	GOVT OR A/E REVWR	CONTRACTOR: SCHEDULE DATES			CONTRACTOR ACTION			APPROVING AUTHORITY					MAILED TO CONTR/ DATE RCD FRM APPR AUTH	REMARKS
							SUBMIT	APPROVAL NEEDED BY	MATERIAL NEEDED BY	ACTION CODE	DATE OF ACTION	DATE FWD TO APPR AUTH/ DATE RCD FROM CONTR	DATE FWD TO OTHER REVIEWER	DATE RCD FROM OTH REVIEWER	ACTION CODE	DATE OF ACTION		
(a)	(b)	(c)	(d)	(e)	(f)		(g)	(h)	(i)	(j)	(k)	(l)	(m)	(n)	(o)	(p)		(q)	(r)
		06 10 00	Adhesives	2.5.5															
			Recycled Content for Cellulose		S														
			Honeycomb Panels																
			SD-05 Design Data																
			Modifications of Structural	1.9.2															
			Members																
			SD-06 Test Reports																
			Preservative-treated	1.4.3															
			SD-07 Certificates																
			Preservative Treatment	1.7															
			SD-10 Operation and Maintenance																
			Data																
			Take-back Program																
		06 61 16	SD-02 Shop Drawings																
			Detail Fabrication Drawings	1.4.2															
			Installation	3.1															
			SD-03 Product Data																
			Solid Polymer	2.1.1															
			Indoor air quality for solid surface	2.2.2	S														
			seam and sealant products																
			Quartz Agglomerate Material	2.1.1															
			SD-04 Samples																
			Material	2.1															
			Counter Tops	2.3.4															
			SD-06 Test Reports																
			Test Report Results	2.1.1															

SUBMITTAL REGISTER

CONTRACT NO. W912QR26BA021_Specs_Vol1-0000

TITLE AND LOCATION
DSCC DLA REPAIR BUILDING 27 - Columbus, OH P2# 519087

CONTRACTOR

ACTIVITY NO	TRANSMITTAL NO	SPEC SECT	DESCRIPTION ITEM SUBMITTED	PARAGRAPH #	CLASSIFICATION	GOVT OR A/E REVWR	CONTRACTOR: SCHEDULE DATES			CONTRACTOR ACTION			APPROVING AUTHORITY						
							SUBMIT	APPROVAL NEEDED BY	MATERIAL NEEDED BY	ACTION CODE	DATE OF ACTION	DATE FWD TO APPR AUTH/ DATE RCD FROM CONTR	DATE FWD TO OTHER REVIEWER	DATE RCD FROM OTH REVIEWER	ACTION CODE	DATE OF ACTION	MAILED TO CONTR/ DATE RCD FRM APPR AUTH	REMARKS
(a)	(b)	(c)	(d)	(e)	(f)		(g)	(h)	(i)	(j)	(k)	(l)	(m)	(n)	(o)	(p)	(q)	(r)
		06 61 16	SD-07 Certificates															
			Qualifications	1.4.1														
			Indoor Air Quality for solid	2.1.1	S													
			surface fabrication products															
			SD-10 Operation and Maintenance															
			Data															
			Solid Polymer	2.1.1														
			Quartz Agglomerate Material	2.1.1														
		07 24 00	SD-02 Shop Drawings															
			Shop Drawings	1.4.6														
			SD-03 Product Data															
			Sheathing Board	2.2														
			Thermal Insulation	2.6														
			Adhesive	2.3														
			Mechanical Fasteners	2.5														
			Accessories	2.12														
			Base Coat	2.7														
			Portland Cement	2.8														
			Reinforcing Fabric	2.9														
			Finish Coat	2.10														
			Joint Sealant	2.13														
			Sealant Primer	2.11														
			Bond Breaker	2.14														
			Backer Rod	2.15														
			Insulation Board	1.4.5														
			Warranty	1.7														

SUBMITTAL REGISTER

CONTRACT NO. W912QR26BA021_Specs_Vol1-0000

TITLE AND LOCATION
DSCC DLA REPAIR BUILDING 27 - Columbus, OH P2# 519087

CONTRACTOR

ACTIVITY NO	TRANSMITTAL NO	SPEC SECT	DESCRIPTION ITEM SUBMITTED	PARAG # RAPH	CLASSIFICATION	GOVT OR A/E REVWR	CONTRACTOR: SCHEDULE DATES			CONTRACTOR ACTION			APPROVING AUTHORITY					MAILED TO CONTR/ DATE RCD FRM APPR AUTH	REMARKS
							SUBMIT	APPROVAL NEEDED BY	MATERIAL NEEDED BY	ACTION CODE	DATE OF ACTION	DATE FWD TO APPR AUTH/ DATE RCD FROM CONTR	DATE FWD TO OTHER REVIEWER	DATE RCD FROM OTH REVIEWER	ACTION CODE	DATE OF ACTION		
(a)	(b)	(c)	(d)	(e)	(f)		(g)	(h)	(i)	(j)	(k)	(l)	(m)	(n)	(o)	(p)		(q)	(r)
		07 24 00	SD-04 Samples																
			Sample Boards	1.2.3.7															
			Mock-up Installation of EIFS	1.2.1.4															
			SD-05 Design Data																
			Moisture Analysis	1.2.4															
			SD-06 Test Reports																
			Abrasion Resistance	1.2.3.1															
			Accelerated Weathering	1.2.3.2															
			Impact Resistance	1.2.2.3															
			Mildew Resistance	1.2.3.3															
			Salt Spray Resistance	1.2.3.4															
			Vapor Transmission	1.2.4															
			Absorption-Freeze-Thaw	1.2.3.6															
			Wall Fire Test	1.2.1.3															
			Water Penetration	1.2.1.1															
			Water Resistance	1.2.3.5															
			Full Scale or Intermediate Scale	1.2.1.3															
			Fire Test																
			Surface Burning Characteristics	1.2.2.1															
			Radiant Heat	1.2.2.2															
			Substrate	3.1															
			Wind Load Test	1.2.1.2															
			SD-07 Certificates																
			Qualifications of EIFS	1.4.1															
			Manufacturer																
			Qualification of EIFS Installer	1.4.2															

SUBMITTAL REGISTER

CONTRACT NO. W912QR26BA021_Specs_Vol1-0000

TITLE AND LOCATION
DSCC DLA REPAIR BUILDING 27 - Columbus, OH P2# 519087

CONTRACTOR

ACTIVITY NO	TRANSMITTAL NO	SPEC SECT	DESCRIPTION ITEM SUBMITTED	PARAGRAPH #	CLASSIFICATION	GOVT OR A/E REVWR	CONTRACTOR: SCHEDULE DATES			CONTRACTOR ACTION			APPROVING AUTHORITY						
							SUBMIT	APPROVAL NEEDED BY	MATERIAL NEEDED BY	ACTION CODE	DATE OF ACTION	DATE FWD TO APPR AUTH/ DATE RCD FROM CONTR	DATE FWD TO OTHER REVIEWER	DATE RCD FROM OTH REVIEWER	ACTION CODE	DATE OF ACTION	MAILED TO CONTR/ DATE RCD FRM APPR AUTH	REMARKS
(a)	(b)	(c)	(d)	(e)	(f)		(g)	(h)	(i)	(j)	(k)	(l)	(m)	(n)	(o)	(p)	(q)	(r)
		07 24 00	Qualification of Sealant Applicator	1.4.3														
			Qualifications of Third-Party Inspector	1.4.4														
			Inspection Checklist	3.5.2														
			SD-08 Manufacturer’s Instructions															
			Manufacturer's Instructions	3.3														
		07 27 19.01	SD-01 Preconstruction Submittals															
			Qualifications of Manufacturer	1.6.1														
			Qualifications of Installer	1.6.2														
			SD-02 Shop Drawings															
			Self-adhering Air Barrier Shop Drawings	1.4.1														
			SD-03 Product Data															
			Self-adhering Air Barrier Primers, Adhesives, and Mastics	2.1														
			Safety Data Sheets	1.4.2														
			SD-04 Samples															
			Self-adhering Air Barrier System Mockup	1.4.3														
			SD-06 Test Reports															
			Field Peel Adhesion Test	1.6.3														
			Flame Propagation of Wall Assemblies	1.4.4														
			Site Inspections and Testing	3.4.1														
			SD-08 Manufacturer’s Instructions															

SUBMITTAL REGISTER

CONTRACT NO. W912QR26BA021_Specs_Vol1-0000

TITLE AND LOCATION
DSCC DLA REPAIR BUILDING 27 - Columbus, OH P2# 519087

CONTRACTOR

ACTIVITY NO	TRANSMITTAL NO	SPEC SECT	DESCRIPTION ITEM SUBMITTED	PARAG # RAPH	CLASSIFICATION	GOVT OR A/E REVWR	CONTRACTOR: SCHEDULE DATES			CONTRACTOR ACTION			APPROVING AUTHORITY					MAILED TO CONTR/ DATE RCD FRM APPR AUTH	REMARKS
							SUBMIT	APPROVAL NEEDED BY	MATERIAL NEEDED BY	ACTION CODE	DATE OF ACTION	DATE FWD TO APPR AUTH/ DATE RCD FROM CONTR	DATE FWD TO OTHER REVIEWER	DATE RCD FROM OTH REVIEWER	ACTION CODE	DATE OF ACTION		
(a)	(b)	(c)	(d)	(e)	(f)		(g)	(h)	(i)	(j)	(k)	(l)	(m)	(n)	(o)	(p)		(q)	(r)
		07 27 19.01	Self-adhering Air Barrier	1.4.2															
			Manufacturer's Printed Instructions																
			Primers, Adhesives, and Mastics	2.1															
		07 27 26	SD-01 Preconstruction Submittals																
			Qualifications of Manufacturer	1.9.1															
			Qualifications of Installer	1.9.2															
			SD-02 Shop Drawings																
			Fluid-Applied Membrane Air	1.4.1															
			Barrier Shop Drawings																
			SD-03 Product Data																
			Fluid-Applied Membrane Air	1.4															
			Barrier																
			Transition Membrane	2.3															
			Primers, Adhesives, and Mastics	2.2															
			Reinforcement	2.6															
			Safety Data Sheets	1.4.2															
			SD-04 Samples																
			Mockup	1.4.3															
			SD-06 Test Reports																
			Capillary Moisture Test	1.6															
			Field Peel Adhesion Test	1.4.4															
			Flame Propagation of Wall	1.4.4															
			Assemblies																
			Site Inspections	3.4.1															
			SD-08 Manufacturer’s Instructions																

SUBMITTAL REGISTER

CONTRACT NO. W912QR26BA021_Specs_Vol1-0000

TITLE AND LOCATION
DSCC DLA REPAIR BUILDING 27 - Columbus, OH P2# 519087

CONTRACTOR

ACTIVITY NO	TRANSMITTAL NO	SPEC SECT	DESCRIPTION ITEM SUBMITTED	PARAGRAPH #	CLASSIFICATION	GOVT OR A/E REVWR	CONTRACTOR: SCHEDULE DATES			CONTRACTOR ACTION			APPROVING AUTHORITY					REMARKS
							SUBMIT	APPROVAL NEEDED BY	MATERIAL NEEDED BY	ACTION CODE	DATE OF ACTION	DATE FWD TO APPR AUTH/ DATE RCD FROM CONTR	DATE FWD TO OTHER REVIEWER	DATE RCD FROM OTH REVIEWER	ACTION CODE	DATE OF ACTION	MAILED TO CONTR/ DATE RCD FRM APPR AUTH	
(a)	(b)	(c)	(d)	(e)	(f)		(g)	(h)	(i)	(j)	(k)	(l)	(m)	(n)	(o)	(p)	(q)	(r)
		07 27 26	Fluid-Applied Membrane Air	1.4.2														
			Barrier Manufacturer's Printed															
			Instructions															
			Primers, Adhesives, and Mastics	1.4.2														
			Printed Manufacturer's Instructions															
		07 60 00	SD-02 Shop Drawings															
			Exposed Sheet Metal	2.2.1														
			Gutters	3.1.14														
			Downspouts	3.1.15														
			Expansion Joints	3.1.22														
			Gravel Stops and fascia	2.2.1														
			Splash Pans	3.1.19														
			Flashing for Roof Drains	3.1.16														
			Base Flashing	3.1.10														
			Counterflashing	3.1.11														
			Flashing at Roof Penetrations															
			and Equipment Supports															
			Reglets	2.2.16														
			Scuppers	3.1.17														
			Copings															
			Drip Edges															
			Conductor Heads	3.1.18														
			Open Valley Flashing															
			Eave Flashing															
			Recycled Content	2.1	S													
			SD-03 Product Data															

SUBMITTAL REGISTER

CONTRACT NO. W912QR26BA021_Specs_Vol1-0000

TITLE AND LOCATION
DSCC DLA REPAIR BUILDING 27 - Columbus, OH P2# 519087

CONTRACTOR

ACTIVITY NO	TRANSMITTAL NO	SPEC SECT	DESCRIPTION ITEM SUBMITTED	PARAG # RAPH	CLASSIFICATION	GOVT OR A/E REVWR	CONTRACTOR: SCHEDULE DATES			CONTRACTOR ACTION			APPROVING AUTHORITY					MAILED TO CONTR/ DATE RCD FRM APPR AUTH	REMARKS
							SUBMIT	APPROVAL NEEDED BY	MATERIAL NEEDED BY	ACTION CODE	DATE OF ACTION	DATE FWD TO APPR AUTH/ DATE RCD FROM CONTR	DATE FWD TO OTHER REVIEWER	DATE RCD FROM OTH REVIEWER	ACTION CODE	DATE OF ACTION		
(a)	(b)	(c)	(d)	(e)	(f)		(g)	(h)	(i)	(j)	(k)	(l)	(m)	(n)	(o)	(p)		(q)	(r)
		07 60 00	Cool Roof	2.2.13															
			SD-04 Samples																
			Finish Samples	1.4.2															
			SD-07 Certificates																
			Warranty on Finishes	2.2.12.1															
			SD-08 Manufacturer’s Instructions																
			Instructions for Installation	1.4.3															
			SD-10 Operation and Maintenance																
			Data																
			Cleaning and Maintenance	1.4.3															
		07 92 00	SD-03 Product Data																
			Sealants	2.1															
			Primers	2.2															
			Bond Breakers	2.3															
			Backstops																
			Caulking	2.4															
			Cleaning Solvents	2.5															
			Field Adhesion	3.1															
			SD-07 Certificates																
			Indoor Air Quality For Interior Sealants	2.1.1	S														
			Indoor Air Quality For Interior Floor Joint Sealants	2.1.3	S														
			Indoor Air Quality For Interior Acoustical Sealants	2.1.4	S														

SUBMITTAL REGISTER

CONTRACT NO. W912QR26BA021_Specs_Vol1-0000

TITLE AND LOCATION
DSCC DLA REPAIR BUILDING 27 - Columbus, OH P2# 519087

CONTRACTOR

ACTIVITY NO	TRANSMITTAL NO	SPEC SECT	DESCRIPTION ITEM SUBMITTED	PARAGRAPH #	CLASSIFICATION	GOVT OR A/E REVWR	CONTRACTOR: SCHEDULE DATES			CONTRACTOR ACTION			APPROVING AUTHORITY					REMARKS
							SUBMIT	APPROVAL NEEDED BY	MATERIAL NEEDED BY	ACTION CODE	DATE OF ACTION	DATE FWD TO APPR AUTH/ DATE RCD FROM CONTR	DATE FWD TO OTHER REVIEWER	DATE RCD FROM OTH REVIEWER	ACTION CODE	DATE OF ACTION	MAILED TO CONTR/ DATE RCD FRM APPR AUTH	
(a)	(b)	(c)	(d)	(e)	(f)		(g)	(h)	(i)	(j)	(k)	(l)	(m)	(n)	(o)	(p)	(q)	(r)
		07 92 00	Indoor Air Quality For Interior	2.4	S													
			Caulking															
		08 11 13	SD-02 Shop Drawings															
			Doors	2.1														
			Doors	2.1														
			Frames	2.4														
			Frames	2.4														
			Accessories															
			SD-03 Product Data															
			Doors	2.1														
			Recycled Content for Steel Door	2.1	S													
			Product															
			Frames	2.4														
			Recycled Content for Steel Frame	2.4	S													
			Product															
			Accessories															
			SD-04 Samples															
			Factory-applied Enamel Finish															
		08 11 16	SD-02 Shop Drawings															
			Door and Frame Assembly	1.5.1														
			SD-03 Product Data															
			Door and Frame Assembly	1.5.1														
			Recycled Content of Aluminum	2.2.3	S													
			Material															
			SD-04 Samples															
			Finish Samples	1.5.2														

SUBMITTAL REGISTER

CONTRACT NO. W912QR26BA021_Specs_Vol1-0000

TITLE AND LOCATION
DSCC DLA REPAIR BUILDING 27 - Columbus, OH P2# 519087

CONTRACTOR

ACTIVITY NO	TRANSMITTAL NO	SPEC SECT	DESCRIPTION ITEM SUBMITTED	PARAG # RAPH	CLASSIFICATION	GOVT OR A/E REVWR	CONTRACTOR: SCHEDULE DATES			CONTRACTOR ACTION			APPROVING AUTHORITY						
							SUBMIT	APPROVAL NEEDED BY	MATERIAL NEEDED BY	ACTION CODE	DATE OF ACTION	DATE FWD TO APPR AUTH/ DATE RCD FROM CONTR	DATE FWD TO OTHER REVIEWER	DATE RCD FROM OTH REVIEWER	ACTION CODE	DATE OF ACTION	MAILED TO CONTR/ DATE RCD FRM APPR AUTH	REMARKS
(a)	(b)	(c)	(d)	(e)	(f)		(g)	(h)	(i)	(j)	(k)	(l)	(m)	(n)	(o)	(p)	(q)	(r)
		08 11 16	SD-05 Design Data															
			Calculations	1.2.1														
			Air Infiltration	1.2.2														
			Water Penetration	1.2.3														
			NFRC Project Label Certificates	1.2.4														
			for Fenestration															
			SD-08 Manufacturer's Instructions															
			Door and Frame Assembly	1.5.1														
			Adjustments, Cleaning, and	1.5.4														
			Maintenance															
			NFRC Project Label Certificates	1.2.4														
			for Fenestration															
		08 33 23	SD-02 Shop Drawings															
			Overhead Coiling Doors	2.2.1														
			Counterbalancing Mechanism	2.2.3														
			Manual Door Operators	2.2.4														
			Electric Door Operators															
			Bottom Bars	2.2.1.3														
			Guides	2.1.1.1														
			Mounting Brackets	2.2.3.1														
			Hood	2.2.2.2														
			Installation Drawings	2.1.1.1														
			SD-03 Product Data															
			Overhead Coiling Doors	2.2.1														
			Hardware	2.2.2														
			Counterbalancing Mechanism	2.2.3														

SUBMITTAL REGISTER

CONTRACT NO. W912QR26BA021_Specs_Vol1-0000

TITLE AND LOCATION
DSCC DLA REPAIR BUILDING 27 - Columbus, OH P2# 519087

CONTRACTOR

ACTIVITY NO	TRANSMITTAL NO	SPEC SECT	DESCRIPTION ITEM SUBMITTED	PARAG # RAPH	CLASSIFICATION	GOVT OR A/E REVWR	CONTRACTOR: SCHEDULE DATES			CONTRACTOR ACTION			APPROVING AUTHORITY					REMARKS
							SUBMIT	APPROVAL NEEDED BY	MATERIAL NEEDED BY	ACTION CODE	DATE OF ACTION	DATE FWD TO APPR AUTH/ DATE RCD FROM CONTR	DATE FWD TO OTHER REVIEWER	DATE RCD FROM OTH REVIEWER	ACTION CODE	DATE OF ACTION	MAILED TO CONTR/ DATE RCD FRM APPR AUTH	
(a)	(b)	(c)	(d)	(e)	(f)		(g)	(h)	(i)	(j)	(k)	(l)	(m)	(n)	(o)	(p)	(q)	(r)
		08 33 23	Manual Door Operators	2.2.4														
			Electric Door Operators															
			Recycled content for steel curtain	2.2.1.1	S													
			slats															
			Recycled content for stainless		S													
			steel curtain slats															
			SD-05 Design Data															
			Overhead Coiling Doors	2.2.1														
			Hardware	2.2.2														
			Counterbalancing Mechanism	2.2.3														
			Manual Door Operators	2.2.4														
			Electric Door Operators															
			SD-10 Operation and Maintenance															
			Data															
			Operation and Maintenance	1.3.2														
			Manuals															
			SD-11 Closeout Submittals															
			Warranty	1.3.1														
		08 41 13	SD-01 Preconstruction Submittals															
			Sample Warranty	1.2.1														
			List of Product Installations	1.2.1														
			SD-02 Shop Drawings															
			Installation Drawings	3.3														
			SD-03 Product Data															
			Manufacturer's Catalog Data	1.2.1														
			Finish	2.2.3														

SUBMITTAL REGISTER

CONTRACT NO. W912QR26BA021_Specs_Vol1-0000

TITLE AND LOCATION
DSCC DLA REPAIR BUILDING 27 - Columbus, OH P2# 519087

CONTRACTOR

ACTIVITY NO	TRANSMITTAL NO	SPEC SECT	DESCRIPTION ITEM SUBMITTED	PARAG # RAPH	CLASSIFICATION	GOVT OR A/E REVWR	CONTRACTOR: SCHEDULE DATES			CONTRACTOR ACTION			APPROVING AUTHORITY					REMARKS
							SUBMIT	APPROVAL NEEDED BY	MATERIAL NEEDED BY	ACTION CODE	DATE OF ACTION	DATE FWD TO APPR AUTH/ DATE RCD FROM CONTR	DATE FWD TO OTHER REVIEWER	DATE RCD FROM OTH REVIEWER	ACTION CODE	DATE OF ACTION	MAILED TO CONTR/ DATE RCD FRM APPR AUTH	
(a)	(b)	(c)	(d)	(e)	(f)		(g)	(h)	(i)	(j)	(k)	(l)	(m)	(n)	(o)	(p)	(q)	(r)
		08 41 13	Recycled Content of Aluminum	2.1.1.2	S													
			Material															
			SD-04 Samples															
			Finish and Color Samples	1.2.1														
			SD-06 Test Reports															
			Certified Test Reports	1.2.1														
			Deflection	3.4.3														
			Air Infiltration	3.4.1														
			Condensation Resistance and	3.4.4														
			Thermal Transmittance															
			Water Infiltration	3.4.5														
			SD-08 Manufacturer’s Instructions															
			Manufacturer's Instructions	3.3														
			SD-11 Closeout Submittals															
			Manufacturer's Product Warranty	3.6														
		08 51 13	SD-02 Shop Drawings															
			Windows	2.1														
			Fabrication Drawings	1.7														
			SD-03 Product Data															
			Windows	2.1														
			Hardware	2.2.7.1														
			Fasteners	2.2.2														
			Window Performance	1.8														
			Thermal-Barrier Windows	2.3														
			Mullions	2.4														
			Window Cleaners' Bolts	2.5														

SUBMITTAL REGISTER

CONTRACT NO. W912QR26BA021_Specs_Vol1-0000

TITLE AND LOCATION
DSCC DLA REPAIR BUILDING 27 - Columbus, OH P2# 519087

CONTRACTOR

ACTIVITY NO	TRANSMITTAL NO	SPEC SECT	DESCRIPTION ITEM SUBMITTED	PARAG # RAPH	CLASSIFICATION	GOVT OR A/E REVWR	CONTRACTOR: SCHEDULE DATES			CONTRACTOR ACTION			APPROVING AUTHORITY					REMARKS
							SUBMIT	APPROVAL NEEDED BY	MATERIAL NEEDED BY	ACTION CODE	DATE OF ACTION	DATE FWD TO APPR AUTH/ DATE RCD FROM CONTR	DATE FWD TO OTHER REVIEWER	DATE RCD FROM OTH REVIEWER	ACTION CODE	DATE OF ACTION	MAILED TO CONTR/ DATE RCD FRM APPR AUTH	
(a)	(b)	(c)	(d)	(e)	(f)		(g)	(h)	(i)	(j)	(k)	(l)	(m)	(n)	(o)	(p)	(q)	(r)
		08 51 13	Screens															
			Weatherstripping	2.1.5														
			Accessories	2.2.7														
			Adhesives	2.2.3														
			Thermal Performance	1.8.4														
			Energy Star Label For Residential	1.8.4	S													
			Aluminum Window Products															
			SD-04 Samples															
			Finish Sample	1.3.3.1														
			Window Sample	1.3.3.2														
			SD-05 Design Data															
			Structural Calculations for	2.1														
			Deflection															
			Design Analysis	1.3.4														
			SD-06 Test Reports															
			Minimum Condensation	1.3.5														
			Resistance Factor															
			SD-07 Certificates															
			Engineer's Qualifications															
			SD-10 Operation and Maintenance															
			Data															
			Windows	2.1														
			Plastic Identification	1.5														
		08 71 00	SD-02 Shop Drawings															
			Manufacturer's Detail Drawings	1.3														
			Verification of Existing Conditions	1.3														

SUBMITTAL REGISTER

CONTRACT NO. W912QR26BA021_Specs_Vol1-0000

TITLE AND LOCATION
DSCC DLA REPAIR BUILDING 27 - Columbus, OH P2# 519087

CONTRACTOR

ACTIVITY NO	TRANSMITTAL NO	SPEC SECT	DESCRIPTION ITEM SUBMITTED	PARAG # RAPH	CLASSIFICATION	GOVT OR A/E REVWR	CONTRACTOR: SCHEDULE DATES			CONTRACTOR ACTION			APPROVING AUTHORITY					MAILED TO CONTR/ DATE RCD FRM APPR AUTH	REMARKS
							SUBMIT	APPROVAL NEEDED BY	MATERIAL NEEDED BY	ACTION CODE	DATE OF ACTION	DATE FWD TO APPR AUTH/ DATE RCD FROM CONTR	DATE FWD TO OTHER REVIEWER	DATE RCD FROM OTH REVIEWER	ACTION CODE	DATE OF ACTION		
(a)	(b)	(c)	(d)	(e)	(f)		(g)	(h)	(i)	(j)	(k)	(l)	(m)	(n)	(o)	(p)		(q)	(r)
		08 71 00	Hardware Schedule	1.5															
			Keying System	2.3.6															
			SD-03 Product Data																
			Hardware Items	2.3															
			SD-08 Manufacturer’s Instructions																
			Installation	3.1															
			SD-10 Operation and Maintenance																
			Data																
			Hardware Schedule	1.5															
			SD-11 Closeout Submittals																
			Key Bitting	1.6.1															
		08 81 00	SD-03 Product Data																
			Insulating Glass	2.3															
			Plastic Glazing																
			Glazing Accessories	1.3															
			Sealants	2.4.3.1															
			SD-04 Samples																
			Insulating Glass	2.3															
			Plastic Sheet																
			Glazing Compound	2.4.2															
			Tape	2.4.5															
			Sealing Tapes	2.4.5															
			SD-07 Certificates																
			Insulating Glass	2.3															
			Plastic Glazing																
			SD-08 Manufacturer’s Instructions																

SUBMITTAL REGISTER

CONTRACT NO. W912QR26BA021_Specs_Vol1-0000

TITLE AND LOCATION
DSCC DLA REPAIR BUILDING 27 - Columbus, OH P2# 519087

CONTRACTOR

ACTIVITY NO	TRANSMITTAL NO	SPEC SECT	DESCRIPTION ITEM SUBMITTED	PARAGRAPH #	CLASSIFICATION	GOVT OR A/E REVWR	CONTRACTOR: SCHEDULE DATES			CONTRACTOR ACTION			APPROVING AUTHORITY					
							SUBMIT	APPROVAL NEEDED BY	MATERIAL NEEDED BY	ACTION CODE	DATE OF ACTION	DATE FWD TO APPR AUTH/ DATE RCD FROM CONTR	DATE FWD TO OTHER REVIEWER	DATE RCD FROM OTH REVIEWER	ACTION CODE	DATE OF ACTION	MAILED TO CONTR/ DATE RCD FRM APPR AUTH	REMARKS
(a)	(b)	(c)	(d)	(e)	(f)		(g)	(h)	(i)	(j)	(k)	(l)	(m)	(n)	(o)	(p)	(q)	(r)
		08 81 00	Setting and Sealing Materials	2.4														
			Glass Setting	3.2														
			SD-11 Closeout Submittals															
			Insulated Glass Units	1.7.1														
		09 06 00	SD-04 Samples															
			Contractor Color Boards	2.1	G													
		09 29 00	SD-02 Shop Drawings															
			Control Joint Shop Drawings	3.2.10.1														
			SD-03 Product Data															
			Gypsum Board	2.1.1														
			Glass Mat Moisture-Resistant															
			Gypsum Tile Backing Board															
			Moisture- and Mold-Resistant															
			Gypsum Backing Board															
			Glass Mat Covered or Reinforced															
			Gypsum Sheathing															
			Glass Mat Covered or Reinforced															
			Gypsum Sheathing Sealant															
			Accessories	2.1.6														
			VOC Content of Joint Compound	2.1.2	S													
			SD-07 Certificates															
			Asbestos Free Materials	2.1	G													
			Indoor Air Quality for Gypsum	2.1.1	S													
			Board															
			Indoor Air Quality for Non-aerosol	2.1.4	S													
			Adhesives															

SUBMITTAL REGISTER

CONTRACT NO. W912QR26BA021_Specs_Vol1-0000

TITLE AND LOCATION
DSCC DLA REPAIR BUILDING 27 - Columbus, OH P2# 519087

CONTRACTOR

ACTIVITY NO	TRANSMITTAL NO	SPEC SECT	DESCRIPTION ITEM SUBMITTED	PARAG # RAPH	CLASSIFICATION	GOVT OR A/E REVWR	CONTRACTOR: SCHEDULE DATES			CONTRACTOR ACTION			APPROVING AUTHORITY					REMARKS
							SUBMIT	APPROVAL NEEDED BY	MATERIAL NEEDED BY	ACTION CODE	DATE OF ACTION	DATE FWD TO APPR AUTH/ DATE RCD FROM CONTR	DATE FWD TO OTHER REVIEWER	DATE RCD FROM OTH REVIEWER	ACTION CODE	DATE OF ACTION	MAILED TO CONTR/ DATE RCD FRM APPR AUTH	
(a)	(b)	(c)	(d)	(e)	(f)		(g)	(h)	(i)	(j)	(k)	(l)	(m)	(n)	(o)	(p)	(q)	(r)
		09 29 00	Indoor Air Quality for Aerosol	2.1.4	S													
			Adhesives															
		09 30 10	SD-02 Shop Drawings															
			Detail Drawings	3.2														
			SD-03 Product Data															
			Porcelain Tile	2.1.1														
			Gauged Porcelain Tile	2.1.2														
			Quarry Tile															
			Mosaic Tile															
			Large Format Glass Tile															
			Glazed Ceramic Wall Tile	2.1.3														
			Transition Strips	2.1														
			Transition Strips	2.6.1														
			Metal Strips	2.6.2														
			Setting-Bed	2.2														
			Mortar, Grout, and Adhesive	2.4														
			Reinforcing Wire Fabric															
			Glass-Mat Gypsum	2.5.1														
			Water-Resistant Backing Board															
			Waterproof Membrane	2.7														
			Crack Isolation Membrane	2.8														
			SD-04 Samples															
			Tile	2.1														
			Accessories	2.1														
			Transition Strips	2.1														
			Transition Strips	2.6.1														

SUBMITTAL REGISTER

CONTRACT NO.

TITLE AND LOCATION
DSCC DLA REPAIR BUILDING 27 - Columbus, OH P2# 519087

CONTRACTOR

ACTIVITY NO	TRANSMITTAL NO	SPEC SECT	DESCRIPTION ITEM SUBMITTED	PARAGRAPH #	CLASSIFICATION	GOVT OR A/E REVWR	CONTRACTOR: SCHEDULE DATES			CONTRACTOR ACTION			APPROVING AUTHORITY					
							SUBMIT	APPROVAL NEEDED BY	MATERIAL NEEDED BY	ACTION CODE	DATE OF ACTION	DATE FWD TO APPR AUTH/ DATE RCD FROM CONTR	DATE FWD TO OTHER REVIEWER	DATE RCD FROM OTH REVIEWER	ACTION CODE	DATE OF ACTION	MAILED TO CONTR/ DATE RCD FRM APPR AUTH	REMARKS
(a)	(b)	(c)	(d)	(e)	(f)		(g)	(h)	(i)	(j)	(k)	(l)	(m)	(n)	(o)	(p)	(q)	(r)
		09 30 10	Metal Strips	2.6.2														
			Grout	2.4.4														
			SD-07 Certificates															
			Indoor Air Quality for Adhesives	2.4	S													
			Indoor Air Quality for Sealants	2.4.9	S													
			SD-08 Manufacturer’s Instructions															
			Manufacturer's Approved	3.8														
			Cleaning Instructions															
			SD-10 Operation and Maintenance															
			Data															
			Gauged Porcelain Tile	2.1.2														
			Porcelain Tile	2.1.1														
			Quarry Tile															
			Mosaic Tile															
			Large Format Glass Tile															
			Glazed Ceramic Wall Tile	2.1.3														
			Transition Strips	2.1														
			Transition Strips	2.6.1														
			Metal Strips	2.6.2														
		09 51 00	SD-02 Shop Drawings															
			Drawings	2.1														
			SD-03 Product Data															
			Acoustical Ceiling Systems															
			Acoustical Performance	2.1.1														
			SD-04 Samples															
			Acoustical Units	2.2														

SUBMITTAL REGISTER

CONTRACT NO. W912QR26BA021_Specs_Vol1-0000

TITLE AND LOCATION
DSCC DLA REPAIR BUILDING 27 - Columbus, OH P2# 519087

CONTRACTOR

ACTIVITY NO	TRANSMITTAL NO	SPEC SECT	DESCRIPTION ITEM SUBMITTED	PARAGRAPH #	CLASSIFICATION	GOVT OR A/E REVWR	CONTRACTOR: SCHEDULE DATES			CONTRACTOR ACTION			APPROVING AUTHORITY					REMARKS
							SUBMIT	APPROVAL NEEDED BY	MATERIAL NEEDED BY	ACTION CODE	DATE OF ACTION	DATE FWD TO APPR AUTH/ DATE RCD FROM CONTR	DATE FWD TO OTHER REVIEWER	DATE RCD FROM OTH REVIEWER	ACTION CODE	DATE OF ACTION	MAILED TO CONTR/ DATE RCD FRM APPR AUTH	
(a)	(b)	(c)	(d)	(e)	(f)		(g)	(h)	(i)	(j)	(k)	(l)	(m)	(n)	(o)	(p)	(q)	(r)
		09 51 00	Acoustical Ceiling Tiles															
		09 65 00	SD-02 Shop Drawings															
			Resilient Flooring and	2.7														
			Accessories															
			Resilient Flooring and	2.8														
			Accessories															
			Resilient Flooring and	2.8														
			Accessories															
			SD-03 Product Data															
			Resilient Flooring and	2.7														
			Accessories															
			Resilient Flooring and	2.8														
			Accessories															
			Resilient Flooring and	2.8														
			Accessories															
			Adhesives	2.3														
			Sheet Vinyl Flooring	2.1														
			Recycled content for Sheet Vinyl		S													
			Flooring															
			Mouldings	2.2														
			SD-04 Samples															
			Resilient Flooring and	2.7														
			Accessories															
			Resilient Flooring and	2.8														
			Accessories															

SUBMITTAL REGISTER

CONTRACT NO. W912QR26BA021_Specs_Vol1-0000

TITLE AND LOCATION
DSCC DLA REPAIR BUILDING 27 - Columbus, OH P2# 519087

CONTRACTOR

ACTIVITY NO	TRANSMITTAL NO	SPEC SECT	DESCRIPTION ITEM SUBMITTED	PARAGRAPH #	CLASSIFICATION	GOVT OR A/E REVWR	CONTRACTOR: SCHEDULE DATES			CONTRACTOR ACTION			APPROVING AUTHORITY					MAILED TO CONTR/ DATE RCD FRM APPR AUTH	REMARKS
							SUBMIT	APPROVAL NEEDED BY	MATERIAL NEEDED BY	ACTION CODE	DATE OF ACTION	DATE FWD TO APPR AUTH/ DATE RCD FROM CONTR	DATE FWD TO OTHER REVIEWER	DATE RCD FROM OTH REVIEWER	ACTION CODE	DATE OF ACTION		
(a)	(b)	(c)	(d)	(e)	(f)		(g)	(h)	(i)	(j)	(k)	(l)	(m)	(n)	(o)	(p)		(q)	(r)
		09 65 00	Resilient Flooring and	2.8															
			Accessories																
			SD-06 Test Reports																
			Moisture, Alkalinity, and Bond	3.3															
			Tests																
			SD-07 Certificates																
			Indoor Air Quality for Sheet Vinyl	2.1	S														
			Flooring																
			Indoor Air Quality for Adhesives	2.3	S														
			SD-08 Manufacturer’s Instructions																
			Surface Preparation	3.2															
			Installation	3.1															
			SD-10 Operation and Maintenance																
			Data																
			Resilient Flooring and	2.7															
			Accessories																
			Resilient Flooring and	2.8															
			Accessories																
			Resilient Flooring and	2.8															
			Accessories																
		09 68 00	SD-02 Shop Drawings																
			Installation Drawings	3.4															
			SD-03 Product Data																
			Carpet	2.1															
			Textile Composite Carpet																
			Carpet Cushion	2.3															

SUBMITTAL REGISTER

CONTRACT NO.

TITLE AND LOCATION
DSCC DLA REPAIR BUILDING 27 - Columbus, OH P2# 519087

CONTRACTOR

ACTIVITY NO	TRANSMITTAL NO	SPEC SECT	DESCRIPTION ITEM SUBMITTED	PARAGRAPH #	CLASSIFICATION	GOVT OR A/E REVWR	CONTRACTOR: SCHEDULE DATES			CONTRACTOR ACTION			APPROVING AUTHORITY					REMARKS
							SUBMIT	APPROVAL NEEDED BY	MATERIAL NEEDED BY	ACTION CODE	DATE OF ACTION	DATE FWD TO APPR AUTH/ DATE RCD FROM CONTR	DATE FWD TO OTHER REVIEWER	DATE RCD FROM OTH REVIEWER	ACTION CODE	DATE OF ACTION	MAILED TO CONTR/ DATE RCD FRM APPR AUTH	
(a)	(b)	(c)	(d)	(e)	(f)		(g)	(h)	(i)	(j)	(k)	(l)	(m)	(n)	(o)	(p)	(q)	(r)
		09 68 00	Recycled Content for Carpeting	2.1.1	S													
			Recycled Content for Fiber	2.3.1	S													
			Cushion															
			Recycled Content for Rubber		S													
			Cushion															
			Recycled Content for		S													
			Polyurethane-Foam Cushion															
			Recycled Content for Textile	2.1.1	S													
			Composite Carpet															
			Moldings	2.5														
			Indoor Air Quality for Aerosol	2.4	S													
			Adhesives															
			Indoor Air Quality for Non-Aerosol	2.4	S													
			Adhesives															
			Indoor Air Quality for Concrete	2.4	S													
			Primer															
			SD-04 Samples															
			Carpet	2.1														
			Textile Composite Carpet															
			Carpet Cushion	2.3														
			Moldings	2.5														
			Sustainable Product Certifications	2.1.4	S													
			SD-06 Test Reports															
			Moisture and Alkalinity Tests	3.2														
			SD-07 Certificates															
			Indoor Air Quality for Carpet	2.1.3	S													

SUBMITTAL REGISTER

CONTRACT NO. W912QR26BA021_Specs_Vol1-0000

TITLE AND LOCATION
DSCC DLA REPAIR BUILDING 27 - Columbus, OH P2# 519087

CONTRACTOR

ACTIVITY NO	TRANSMITTAL NO	SPEC SECT	DESCRIPTION ITEM SUBMITTED	PARAG # RAPH	CLASSIFICATION	GOVT OR A/E REVWR	CONTRACTOR: SCHEDULE DATES			CONTRACTOR ACTION			APPROVING AUTHORITY					MAILED TO CONTR/ DATE RCD FRM APPR AUTH	REMARKS
							SUBMIT	APPROVAL NEEDED BY	MATERIAL NEEDED BY	ACTION CODE	DATE OF ACTION	DATE FWD TO APPR AUTH/ DATE RCD FROM CONTR	DATE FWD TO OTHER REVIEWER	DATE RCD FROM OTH REVIEWER	ACTION CODE	DATE OF ACTION		
(a)	(b)	(c)	(d)	(e)	(f)		(g)	(h)	(i)	(j)	(k)	(l)	(m)	(n)	(o)	(p)		(q)	(r)
		09 68 00	Indoor Air Quality for Textile	2.1.3	S														
			Composite Carpet																
			Indoor Air Quality for Fiber	2.3.1	S														
			Cushion																
			Indoor Air Quality for Rubber		S														
			Cushion																
			Indoor Air Quality for		S														
			Polyurethane-Foam Cushion																
			SD-08 Manufacturer’s Instructions																
			Surface Preparation	3.1															
			SD-10 Operation and Maintenance																
			Data																
			Cleaning and Protection	3.5															
			Maintenance Service	3.7.2															
			SD-11 Closeout Submittals																
			Warranty	1.6															
		09 90 00	SD-02 Shop Drawings																
			Piping Identification																
			SD-03 Product Data																
			Coating	2.1															
			Product Data Sheets	2.1															
			Sealant	3.3.5															
			SD-04 Samples																
			Color	2.2															
			Textured Wall Coating System	1.5.6															
			SD-07 Certificates																

SUBMITTAL REGISTER

CONTRACT NO. W912QR26BA021_Specs_Vol1-0000

TITLE AND LOCATION
DSCC DLA REPAIR BUILDING 27 - Columbus, OH P2# 519087

CONTRACTOR

ACTIVITY NO	TRANSMITTAL NO	SPEC SECT	DESCRIPTION ITEM SUBMITTED	PARAGRAPH #	CLASSIFICATION	GOVT OR A/E REVWR	CONTRACTOR: SCHEDULE DATES			CONTRACTOR ACTION			APPROVING AUTHORITY					REMARKS
							SUBMIT	APPROVAL NEEDED BY	MATERIAL NEEDED BY	ACTION CODE	DATE OF ACTION	DATE FWD TO APPR AUTH/ DATE RCD FROM CONTR	DATE FWD TO OTHER REVIEWER	DATE RCD FROM OTH REVIEWER	ACTION CODE	DATE OF ACTION	MAILED TO CONTR/ DATE RCD FRM APPR AUTH	
(a)	(b)	(c)	(d)	(e)	(f)		(g)	(h)	(i)	(j)	(k)	(l)	(m)	(n)	(o)	(p)	(q)	(r)
		09 90 00	Qualification Testing	1.5.5.2														
			Indoor Air Quality for Paints and	1.5.4														
			Primers															
			Indoor Air Quality for	1.5.4														
			Consolidated Latex Paints															
			SD-08 Manufacturer’s Instructions															
			Application Instructions	3.4.1														
			Mixing	2.1														
			Manufacturer's Safety Data	1.7.1														
			Sheets															
			SD-10 Operation and Maintenance															
			Data															
			Coatings	2.1														
		10 14 00.20	SD-02 Shop Drawings															
			Detail Drawings	1.3.2														
			SD-03 Product Data															
			Room Identification And	2.1														
			Directional Signage System															
			Exit Door Tactile Sign	2.3														
			Door Tags	2.4														
			SD-04 Samples															
			Interior Signage	1.3.1														
			Room Identification And	2.1														
			Directional Signage System															
			Stair Signage															
			Exit Door Tactile Sign	2.3														

SUBMITTAL REGISTER

CONTRACT NO. W912QR26BA021_Specs_Vol1-0000

TITLE AND LOCATION
DSCC DLA REPAIR BUILDING 27 - Columbus, OH P2# 519087

CONTRACTOR

ACTIVITY NO	TRANSMITTAL NO	SPEC SECT	DESCRIPTION ITEM SUBMITTED	PARAGRAPH #	CLASSIFICATION	GOVT OR A/E REVWR	CONTRACTOR: SCHEDULE DATES			CONTRACTOR ACTION			APPROVING AUTHORITY					MAILED TO CONTR/ DATE RCD FRM APPR AUTH	REMARKS
							SUBMIT	APPROVAL NEEDED BY	MATERIAL NEEDED BY	ACTION CODE	DATE OF ACTION	DATE FWD TO APPR AUTH/ DATE RCD FROM CONTR	DATE FWD TO OTHER REVIEWER	DATE RCD FROM OTH REVIEWER	ACTION CODE	DATE OF ACTION		
(a)	(b)	(c)	(d)	(e)	(f)		(g)	(h)	(i)	(j)	(k)	(l)	(m)	(n)	(o)	(p)		(q)	(r)
		10 14 00.20	Door Tags	2.4															
			SD-10 Operation and Maintenance																
			Data																
			Approved Manufacturer's	3.1															
			Instructions																
			Protection and Cleaning	3.1.2															
		10 26 00	SD-02 Shop Drawings																
			Corner Guards	2.2															
			SD-03 Product Data																
			Corner Guards	2.2															
			Recycled content for steel	2.2.1	S														
			component of corner guards																
			SD-04 Samples																
			Corner Guards	2.2															
			SD-07 Certificates																
			Indoor air quality for adhesives	2.4	S														
			SD-10 Operation and Maintenance																
			Data																
			Corner Guards	2.2															
		10 28 13	SD-02 Shop Drawings																
			Product Schedule	2.1															
			SD-03 Product Data																
			Recycled content for stainless	2.1	S														
			steel toilet accessories																
			Item A5145	2.1.3															
			SD-07 Certificates																

SUBMITTAL REGISTER

CONTRACT NO. W912QR26BA021_Specs_Vol1-0000

TITLE AND LOCATION
DSCC DLA REPAIR BUILDING 27 - Columbus, OH P2# 519087

CONTRACTOR

ACTIVITY NO	TRANSMITTAL NO	SPEC SECT	DESCRIPTION ITEM SUBMITTED	PARAGRAPH #	CLASSIFICATION	GOVT OR A/E REVWR	CONTRACTOR: SCHEDULE DATES			CONTRACTOR ACTION			APPROVING AUTHORITY					REMARKS
							SUBMIT	APPROVAL NEEDED BY	MATERIAL NEEDED BY	ACTION CODE	DATE OF ACTION	DATE FWD TO APPR AUTH/ DATE RCD FROM CONTR	DATE FWD TO OTHER REVIEWER	DATE RCD FROM OTH REVIEWER	ACTION CODE	DATE OF ACTION	MAILED TO CONTR/ DATE RCD FRM APPR AUTH	
(a)	(b)	(c)	(d)	(e)	(f)		(g)	(h)	(i)	(j)	(k)	(l)	(m)	(n)	(o)	(p)	(q)	(r)
		10 28 13	Baby Changing Stations															
			SD-10 Operation and Maintenance															
			Data															
			Item A5145	2.1.3														
		10 51 13	SD-02 Shop Drawings															
			Types	2.2														
			Location	1.4														
			Installation	3.1														
			Numbering System															
			SD-03 Product Data															
			Material	2.3														
			Locking Devices															
			Handles	2.4.4														
			Finish	2.3.2														
			Components	2.4														
			Assembly	3.1														
			SD-04 Samples															
			Color Chips	1.5.1														
		12 00 01.00 20	SD-01 Preconstruction Submittals															
			FF&E Schedule and Schedule	3.1.1.2														
			Updates															
			SD-04 Samples															
			Post Option Award FF&E Finish															
			Submittals															
			SD-10 Operation and Maintenance															
			Data															

SUBMITTAL REGISTER

CONTRACT NO. W912QR26BA021_Specs_Vol1-0000

TITLE AND LOCATION
DSCC DLA REPAIR BUILDING 27 - Columbus, OH P2# 519087

CONTRACTOR

ACTIVITY NO	TRANSMITTAL NO	SPEC SECT	DESCRIPTION ITEM SUBMITTED	PARAGRAPH #	CLASSIFICATION	GOVT OR A/E REVWR	CONTRACTOR: SCHEDULE DATES			CONTRACTOR ACTION			APPROVING AUTHORITY					MAILED TO CONTR/ DATE RCD FRM APPR AUTH	REMARKS
							SUBMIT	APPROVAL NEEDED BY	MATERIAL NEEDED BY	ACTION CODE	DATE OF ACTION	DATE FWD TO APPR AUTH/ DATE RCD FROM CONTR	DATE FWD TO OTHER REVIEWER	DATE RCD FROM OTH REVIEWER	ACTION CODE	DATE OF ACTION		
(a)	(b)	(c)	(d)	(e)	(f)		(g)	(h)	(i)	(j)	(k)	(l)	(m)	(n)	(o)	(p)		(q)	(r)
		12 00 01.00 20	Warranty and Maintenance	3.5.1															
			Information																
			SD-11 Closeout Submittals																
			Punch List(s) Submittal	3.3.2															
		12 50 00.13 10	SD-01 Preconstruction Submittals																
			Storage Location	1.7.3															
			SD-02 Shop Drawings																
			Installation Drawings	3.3.1															
			SD-03 Product Data																
			Product Data	2.3															
			Product Style Options	2.3															
			SD-04 Samples																
			Fabric and Finishes																
			SD-07 Certificates																
			Authorized Dealer	1.6															
			Certified Furniture Installers	1.6															
			Licensed Electrician	1.6															
			Certified Telecommunications	1.6															
			Installer																
			Manufacturer's Certification	2.3															
			Warranty	1.8															
			SD-10 Operation and Maintenance																
			Data																
			Furniture, Data Package 1	3.5															
			SD-11 Closeout Submittals																
			Energy Efficient Equipment	2.1.1	S														

SUBMITTAL REGISTER

CONTRACT NO. W912QR26BA021_Specs_Vol1-0000

TITLE AND LOCATION
DSCC DLA REPAIR BUILDING 27 - Columbus, OH P2# 519087

CONTRACTOR

ACTIVITY NO	TRANSMITTAL NO	SPEC SECT	DESCRIPTION ITEM SUBMITTED	PARAGRAPH #	CLASSIFICATION	GOVT OR A/E REVWR	CONTRACTOR: SCHEDULE DATES			CONTRACTOR ACTION			APPROVING AUTHORITY					REMARKS
							SUBMIT	APPROVAL NEEDED BY	MATERIAL NEEDED BY	ACTION CODE	DATE OF ACTION	DATE FWD TO APPR AUTH/ DATE RCD FROM CONTR	DATE FWD TO OTHER REVIEWER	DATE RCD FROM OTH REVIEWER	ACTION CODE	DATE OF ACTION	MAILED TO CONTR/ DATE RCD FRM APPR AUTH	
(a)	(b)	(c)	(d)	(e)	(f)		(g)	(h)	(i)	(j)	(k)	(l)	(m)	(n)	(o)	(p)	(q)	(r)
		12 50 00.13 10	Reduced VOC's for Furniture	2.1.2	S													
			Recycled Content of Furniture	2.1.3	S													
			Bio-Based Content of Furniture	2.1.4	S													
		21 13 13	SD-01 Preconstruction Submittals															
			Qualified Fire Protection Engineer (QFPE)	1.2.3	G													
			Sprinkler System Designer	1.4.2.1	G													
			Sprinkler System Installer	1.4.2.2	G													
			SD-02 Shop Drawings															
			Shop Drawing	1.2.1.1	G													
			SD-03 Product Data															
			Pipe	2.2.1	G													
			Fittings	2.3.1.2	G													
			Valves	2.3.4	G													
			Alarm Valves	2.3.5	G													
			Relief Valves	2.7.5	G													
			Sprinklers	2.6	G													
			Pipe Hangers and Supports	2.3.3	G													
			Sprinkler Alarm Switch	2.4.1	G													
			Valve Supervisory (Tamper) Switch	2.4.2	G													
			Fire Department Connection	2.5	G													
			Backflow Prevention Assembly		G													
			Air Vent	2.7.6	G													
			Hose Valve		G													
			Nameplates	2.1.2	G													

SUBMITTAL REGISTER

CONTRACT NO. W912QR26BA021_Specs_Vol1-0000

TITLE AND LOCATION
DSCC DLA REPAIR BUILDING 27 - Columbus, OH P2# 519087

CONTRACTOR

ACTIVITY NO	TRANSMITTAL NO	SPEC SECT	DESCRIPTION ITEM SUBMITTED	PARAG # RAPH	CLASSIFICATION	GOVT OR A/E REVWR	CONTRACTOR: SCHEDULE DATES			CONTRACTOR ACTION			APPROVING AUTHORITY					MAILED TO CONTR/ DATE RCD FRM APPR AUTH	REMARKS
							SUBMIT	APPROVAL NEEDED BY	MATERIAL NEEDED BY	ACTION CODE	DATE OF ACTION	DATE FWD TO APPR AUTH/ DATE RCD FROM CONTR	DATE FWD TO OTHER REVIEWER	DATE RCD FROM OTH REVIEWER	ACTION CODE	DATE OF ACTION		
(a)	(b)	(c)	(d)	(e)	(f)		(g)	(h)	(i)	(j)	(k)	(l)	(m)	(n)	(o)	(p)		(q)	(r)
		21 13 13	SD-05 Design Data																
			Seismic Bracing	2.3.3	G														
			Hydraulic Calculations	1.2.1.2	G														
			SD-06 Test Reports																
			Test Procedures	3.7.1	G														
			SD-07 Certificates																
			Verification of Compliant	3.7.2.1	G														
			Installation																
			Request for Government Final	3.7.2.2	G														
			Test																
			SD-10 Operation and Maintenance																
			Data																
			Operating and Maintenance	3.9	G														
			(O&M) Instructions																
			Spare Parts	1.6	G														
			SD-11 Closeout Submittals																
			As-built drawings	3.9															
		22 00 00	SD-02 Shop Drawings																
			Plumbing System	3.6.1															
			SD-03 Product Data																
			Backflow Prevention Assemblies	3.6.1.1															
			Recycled Content for Steel Pipe		S														
			Recycled Content for Cast Iron		S														
			Pipe																
			Water Heaters	2.6															

SUBMITTAL REGISTER

CONTRACT NO. W912QR26BA021_Specs_Vol1-0000

TITLE AND LOCATION
DSCC DLA REPAIR BUILDING 27 - Columbus, OH P2# 519087

CONTRACTOR

ACTIVITY NO	TRANSMITTAL NO	SPEC SECT	DESCRIPTION ITEM SUBMITTED	PARAGRAPH #	CLASSIFICATION	GOVT OR A/E REVWR	CONTRACTOR: SCHEDULE DATES			CONTRACTOR ACTION			APPROVING AUTHORITY					MAILED TO CONTR/ DATE RCD FRM APPR AUTH	REMARKS
							SUBMIT	APPROVAL NEEDED BY	MATERIAL NEEDED BY	ACTION CODE	DATE OF ACTION	DATE FWD TO APPR AUTH/ DATE RCD FROM CONTR	DATE FWD TO OTHER REVIEWER	DATE RCD FROM OTH REVIEWER	ACTION CODE	DATE OF ACTION		
(a)	(b)	(c)	(d)	(e)	(f)		(g)	(h)	(i)	(j)	(k)	(l)	(m)	(n)	(o)	(p)		(q)	(r)
		22 00 00	Energy Star Label for Gas	2.6.1.1	S														
			Storage Water Heater																
			Energy Star Label for Gas	2.6.2	S														
			Instantaneous Water Heater																
			Pumps	2.8															
			_____																
			Welding	1.6.1															
			Vibration-Absorbing Features	3.3															
			Plumbing System	3.6.1															
			Thermostatic Mixing Valves	2.3.3															
			Point-Of-Use Mixing Valve																
			Automatic Temperature And/Or																
			Pressure Compensating Valve																
			SD-06 Test Reports																
			Tests, Flushing and Disinfection	3.6															
			Test of Backflow Prevention	3.6.1.1															
			Assemblies																
			_____																
			SD-07 Certificates																
			Materials and Equipment	1.4															
			Bolts	2.1.1															
			SD-10 Operation and Maintenance																
			Data																
			Plumbing System	3.6.1															
		23 05 15	SD-01 Preconstruction Submittals																

SUBMITTAL REGISTER

CONTRACT NO. W912QR26BA021_Specs_Vol1-0000

TITLE AND LOCATION
DSCC DLA REPAIR BUILDING 27 - Columbus, OH P2# 519087

CONTRACTOR

ACTIVITY NO	TRANSMITTAL NO	SPEC SECT	DESCRIPTION ITEM SUBMITTED	PARAGRAPH #	CLASSIFICATION	GOVT OR A/E REVWR	CONTRACTOR: SCHEDULE DATES			CONTRACTOR ACTION			APPROVING AUTHORITY					REMARKS
							SUBMIT	APPROVAL NEEDED BY	MATERIAL NEEDED BY	ACTION CODE	DATE OF ACTION	DATE FWD TO APPR AUTH/ DATE RCD FROM CONTR	DATE FWD TO OTHER REVIEWER	DATE RCD FROM OTH REVIEWER	ACTION CODE	DATE OF ACTION	MAILED TO CONTR/ DATE RCD FRM APPR AUTH	
(a)	(b)	(c)	(d)	(e)	(f)		(g)	(h)	(i)	(j)	(k)	(l)	(m)	(n)	(o)	(p)	(q)	(r)
		23 05 15	Material, Equipment, and Fixture	1.2														
			Lists															
			SD-02 Shop Drawings															
			Record Drawings	1.2														
			Connection Diagrams	1.2														
			Coordination Drawings	1.2														
			Fabrication Drawings	1.2														
			Installation Drawings	3.1														
			SD-03 Product Data															
			Pipe and Fittings	2.2														
			Piping Specialties	2.3														
			Valves	2.4														
			Miscellaneous Materials	2.5														
			Supporting Elements	2.6														
			Equipment Foundation Data	1.2														
			SD-04 Samples															
			Manufacturer's Standard Color	1.2														
			Charts															
			SD-05 Design Data															
			Pipe and Fittings	2.2														
			Piping Specialties	2.3														
			Valves	2.4														
			SD-06 Test Reports															
			Hydrostatic Tests	3.1														
			Air Tests	3.1														
			Valve-Operating Tests	3.1														

SUBMITTAL REGISTER

CONTRACT NO. W912QR26BA021_Specs_Vol1-0000

TITLE AND LOCATION
DSCC DLA REPAIR BUILDING 27 - Columbus, OH P2# 519087

CONTRACTOR

ACTIVITY NO	TRANSMITTAL NO	SPEC SECT	DESCRIPTION ITEM SUBMITTED	PARAG # RAPH	CLASSIFICATION	GOVT OR A/E REVWR	CONTRACTOR: SCHEDULE DATES			CONTRACTOR ACTION			APPROVING AUTHORITY					MAILED TO CONTR/ DATE RCD FRM APPR AUTH	REMARKS
							SUBMIT	APPROVAL NEEDED BY	MATERIAL NEEDED BY	ACTION CODE	DATE OF ACTION	DATE FWD TO APPR AUTH/ DATE RCD FROM CONTR	DATE FWD TO OTHER REVIEWER	DATE RCD FROM OTH REVIEWER	ACTION CODE	DATE OF ACTION		
(a)	(b)	(c)	(d)	(e)	(f)		(g)	(h)	(i)	(j)	(k)	(l)	(m)	(n)	(o)	(p)		(q)	(r)
		23 05 15	Drainage Tests	3.1															
			Pneumatic Tests	3.1															
			Non-Destructive Electric Tests	3.1															
			System Operation Tests	3.1															
			SD-07 Certificates																
			Record of Satisfactory Field	1.4.2															
			Operation																
			List of Qualified Permanent	1.4.3															
			Service Organizations																
			Listing of Product Installations	1.2															
			Records of Existing Conditions	1.2															
			Surface Resistance	3.1															
			Shear and Tensile Strengths	3.1															
			Temperature Ratings	3.1															
			Bending Tests	3.1															
			Flattening Tests	3.1															
			Transverse Guided Weld Bend	3.1															
			Tests																
			SD-10 Operation and Maintenance																
			Data																
			Operation and Maintenance	3.12															
			Manuals																
		23 05 48.19	SD-02 Shop Drawings																
			Flexible Couplings or Joints	3.3															
			Coupling And Bracing	3.1															
			SD-03 Product Data																

SUBMITTAL REGISTER

CONTRACT NO. W912QR26BA021_Specs_Vol1-0000

TITLE AND LOCATION
DSCC DLA REPAIR BUILDING 27 - Columbus, OH P2# 519087

CONTRACTOR

ACTIVITY NO	TRANSMITTAL NO	SPEC SECT	DESCRIPTION ITEM SUBMITTED	PARAGRAPH #	CLASSIFICATION	GOVT OR A/E REVWR	CONTRACTOR: SCHEDULE DATES			CONTRACTOR ACTION			APPROVING AUTHORITY					MAILED TO CONTR/ DATE RCD FRM APPR AUTH	REMARKS
							SUBMIT	APPROVAL NEEDED BY	MATERIAL NEEDED BY	ACTION CODE	DATE OF ACTION	DATE FWD TO APPR AUTH/ DATE RCD FROM CONTR	DATE FWD TO OTHER REVIEWER	DATE RCD FROM OTH REVIEWER	ACTION CODE	DATE OF ACTION		
(a)	(b)	(c)	(d)	(e)	(f)		(g)	(h)	(i)	(j)	(k)	(l)	(m)	(n)	(o)	(p)		(q)	(r)
		23 05 48.19	Flexible Couplings Or Joints	3.3															
			Equipment Restraint	2.2															
		23 05 93	SD-01 Preconstruction Submittals																
			TAB Firm And Personnel Qualifications	1.6	G														
			TAB Firm And Personnel Qualifications	1.6	G														
			Design Review Report	1.9	G														
			TAB Pre-Field Engineering Plan	1.10	G														
			SD-06 Test Reports																
			Phase 1 Pre-Final DALT Report	3.1.6	G														
			Phase 2 Pre-Final DALT Report	3.1.6	G														
			Certified Final DALT Report	3.1.8	G														
			Phase 1 Certified TAB Report of Proportional Balancing	3.2.7	G														
			Phase 1 Certified TAB Report of Season 1	3.2.7	G														
			Phase 2 Certified TAB Report of Proportional Balancing	3.2.7	G														
			Phase 2 Certified TAB Report of Season 1	3.2.7	G														
			SD-11 Closeout Submittals																
			Phase 1 Certified TAB Report of Season 2	3.3.1.2	G														
			Phase 2 Certified TAB Report of Season 2	3.3.1.2	G														

SUBMITTAL REGISTER

CONTRACT NO. W912QR26BA021_Specs_Vol1-0000

TITLE AND LOCATION
DSCC DLA REPAIR BUILDING 27 - Columbus, OH P2# 519087

CONTRACTOR

ACTIVITY NO	TRANSMITTAL NO	SPEC SECT	DESCRIPTION ITEM SUBMITTED	PARAGRAPH #	CLASSIFICATION	GOVT OR A/E REVWR	CONTRACTOR: SCHEDULE DATES			CONTRACTOR ACTION			APPROVING AUTHORITY					MAILED TO CONTR/ DATE RCD FRM APPR AUTH	REMARKS
							SUBMIT	APPROVAL NEEDED BY	MATERIAL NEEDED BY	ACTION CODE	DATE OF ACTION	DATE FWD TO APPR AUTH/ DATE RCD FROM CONTR	DATE FWD TO OTHER REVIEWER	DATE RCD FROM OTH REVIEWER	ACTION CODE	DATE OF ACTION		
(a)	(b)	(c)	(d)	(e)	(f)		(g)	(h)	(i)	(j)	(k)	(l)	(m)	(n)	(o)	(p)		(q)	(r)
		23 05 93	Certified Final TAB Report	3.3.1.2	G														
		23 07 00	SD-02 Shop Drawings																
			MICA Plates	3.2.2.4															
			Pipe Insulation Systems	2.3															
			Pipe Insulation Systems	3.2															
			Duct Insulation Systems	3.3															
			Equipment Insulation Systems	3.4															
			Recycled content for insulation	2.3.1	S														
			materials																
			SD-03 Product Data																
			Pipe Insulation Systems	2.3															
			Pipe Insulation Systems	3.2															
			Duct Insulation Systems	3.3															
			Equipment Insulation Systems	3.4															
			SD-04 Samples																
			Thermal Insulation	2.2.1.3															
			Display Samples	3.1.1															
			SD-07 Certificates																
			Indoor air quality for adhesives	2.2.1	S														
			SD-08 Manufacturer’s Instructions																
			Pipe Insulation Systems	2.3															
			Pipe Insulation Systems	3.2															
			Duct Insulation Systems	3.3															
			Equipment Insulation Systems	3.4															
		23 08 00	SD-03 Product Data																
			Test Equipment	2.1															

SUBMITTAL REGISTER

CONTRACT NO. W912QR26BA021_Specs_Vol1-0000

TITLE AND LOCATION
DSCC DLA REPAIR BUILDING 27 - Columbus, OH P2# 519087

CONTRACTOR

ACTIVITY NO	TRANSMITTAL NO	SPEC SECT	DESCRIPTION ITEM SUBMITTED	PARAG # RAPH	CLASSIFICATION	GOVT OR A/E REVWR	CONTRACTOR: SCHEDULE DATES			CONTRACTOR ACTION			APPROVING AUTHORITY					MAILED TO CONTR/ DATE RCD FRM APPR AUTH	REMARKS
							SUBMIT	APPROVAL NEEDED BY	MATERIAL NEEDED BY	ACTION CODE	DATE OF ACTION	DATE FWD TO APPR AUTH/ DATE RCD FROM CONTR	DATE FWD TO OTHER REVIEWER	DATE RCD FROM OTH REVIEWER	ACTION CODE	DATE OF ACTION		
(a)	(b)	(c)	(d)	(e)	(f)		(g)	(h)	(i)	(j)	(k)	(l)	(m)	(n)	(o)	(p)		(q)	(r)
		23 08 00	SD-06 Test Reports																
			Pipe Flushing, Testing, And	1.5															
			Water Treatment Reports																
			Completed Pre-Functional	3.3															
			Checklists																
			SD-07 Certificates																
			Certificate Of Readiness	1.6															
		23 09 00	SD-02 Shop Drawings																
			DDC Contractor Design Drawings	3.3	G														
			Draft As-Built Drawings	3.3	G														
			Final As-Built Drawings	3.3	G														
			SD-03 Product Data																
			Programming Software	1.8.3	G														
			Controller Application Programs	1.8.4	G														
			Configuration Software	1.8.1	G														
			Controller Configuration Settings	1.8.2	G														
			Proprietary Multi-Split	1.1.1.3	G														
			Engineering Tool Software																
			Manufacturer's Product Data	2.2	G														
			Niagara Framework Supervisory	1.8.5	G														
			Gateway Backups																
			SD-05 Design Data																
			Boiler Or Chiller Plant Gateway	1.9															
			Request																
			SD-06 Test Reports																
			Existing Conditions Report	3.1.1															

SUBMITTAL REGISTER

CONTRACT NO. W912QR26BA021_Specs_Vol1-0000

TITLE AND LOCATION
DSCC DLA REPAIR BUILDING 27 - Columbus, OH P2# 519087

CONTRACTOR

ACTIVITY NO	TRANSMITTAL NO	SPEC SECT	DESCRIPTION ITEM SUBMITTED	PARAGRAPH #	CLASSIFICATION	GOVT OR A/E REVWR	CONTRACTOR: SCHEDULE DATES			CONTRACTOR ACTION			APPROVING AUTHORITY					REMARKS
							SUBMIT	APPROVAL NEEDED BY	MATERIAL NEEDED BY	ACTION CODE	DATE OF ACTION	DATE FWD TO APPR AUTH/ DATE RCD FROM CONTR	DATE FWD TO OTHER REVIEWER	DATE RCD FROM OTH REVIEWER	ACTION CODE	DATE OF ACTION	MAILED TO CONTR/ DATE RCD FRM APPR AUTH	
(a)	(b)	(c)	(d)	(e)	(f)		(g)	(h)	(i)	(j)	(k)	(l)	(m)	(n)	(o)	(p)	(q)	(r)
		23 09 00	Pre-Construction Quality Control	1.10.1	G													
			(QC) Checklist															
			Post-Construction Quality Control	1.10.2	G													
			(QC) Checklist															
			Start-Up Testing Report	3.5.2	G													
			PVT Procedures	3.6.1	G													
			PVT Report	3.6.3	G													
			Control Contractor s Performance	3.7.5	G													
			Verification Testing Plan															
			Equipment Supplier s	3.7.3.1	G													
			Performance Verification Testing															
			Plan															
			Endurance Testing Results	3.7.8.3	G													
			Performance Verification Test	3.7.9	G													
			Report															
			SD-10 Operation and Maintenance															
			Data															
			Operation and Maintenance	3.8	G													
			(O&M) Instructions															
			Training Documentation	3.10.1	G													
			SD-11 Closeout Submittals															
			Enclosure Keys	2.5	G													
			Password Summary Report	3.2.6.1	G													
			Closeout Quality Control (QC)	1.10.3	G													
			Checklist															
		23 09 53.00 20	SD-02 Shop Drawings															

SUBMITTAL REGISTER

CONTRACT NO. W912QR26BA021_Specs_Vol1-0000

TITLE AND LOCATION
DSCC DLA REPAIR BUILDING 27 - Columbus, OH P2# 519087

CONTRACTOR

ACTIVITY NO	TRANSMITTAL NO	SPEC SECT	DESCRIPTION ITEM SUBMITTED	PARAGRAPH #	CLASSIFICATION	GOVT OR A/E REVWR	CONTRACTOR: SCHEDULE DATES			CONTRACTOR ACTION			APPROVING AUTHORITY					REMARKS
							SUBMIT	APPROVAL NEEDED BY	MATERIAL NEEDED BY	ACTION CODE	DATE OF ACTION	DATE FWD TO APPR AUTH/ DATE RCD FROM CONTR	DATE FWD TO OTHER REVIEWER	DATE RCD FROM OTH REVIEWER	ACTION CODE	DATE OF ACTION	MAILED TO CONTR/ DATE RCD FRM APPR AUTH	
(a)	(b)	(c)	(d)	(e)	(f)		(g)	(h)	(i)	(j)	(k)	(l)	(m)	(n)	(o)	(p)	(q)	(r)
		23 09 53.00 20	Control System Diagrams	1.7.1	G													
			Ladder Diagram	1.7.2	G													
			Operating Parameters	1.7.3	G													
			Automatic Control Valve	1.7.4	G													
			Schedules															
			Damper Schedules	1.7.5	G													
			Sequence of Operation	1.7.7	G													
			Arrangement Drawing	1.7.8	G													
			Wiring Diagram	1.7.6	G													
			SD-03 Product Data															
			Actuators	2.2	G													
			Valves	2.3	G													
			Dampers	2.4	G													
			Fire Protection Devices	2.5	G													
			Sensors	2.6	G													
			Thermostats	2.8	G													
			Sunshields	2.9	G													
			Pressure Switches	2.10.1	G													
			Indicating Devices	2.11	G													
			Controllers	2.13	G													
			Pressure Gages	2.12	G													
			Control Panels	2.15	G													
			VAV Terminal Unit Controls	2.16	G													
			SD-06 Test Reports															
			Commissioning Procedures	1.9.7	G													

SUBMITTAL REGISTER

CONTRACT NO. W912QR26BA021_Specs_Vol1-0000

TITLE AND LOCATION
DSCC DLA REPAIR BUILDING 27 - Columbus, OH P2# 519087

CONTRACTOR

ACTIVITY NO	TRANSMITTAL NO	SPEC SECT	DESCRIPTION ITEM SUBMITTED	PARAG # RAPH	CLASSIFICATION	GOVT OR A/E REVWR	CONTRACTOR: SCHEDULE DATES			CONTRACTOR ACTION			APPROVING AUTHORITY					REMARKS
							SUBMIT	APPROVAL NEEDED BY	MATERIAL NEEDED BY	ACTION CODE	DATE OF ACTION	DATE FWD TO APPR AUTH/ DATE RCD FROM CONTR	DATE FWD TO OTHER REVIEWER	DATE RCD FROM OTH REVIEWER	ACTION CODE	DATE OF ACTION	MAILED TO CONTR/ DATE RCD FRM APPR AUTH	
(a)	(b)	(c)	(d)	(e)	(f)		(g)	(h)	(i)	(j)	(k)	(l)	(m)	(n)	(o)	(p)	(q)	(r)
		23 09 53.00 20	Calibration Adjustment And	1.9.8	G													
			Commissioning Reports															
			Site Testing Procedures	1.9.6	G													
			Performance Verification Test	3.3.5	G													
			SD-07 Certificates															
			Certification of Completion	3.3.4	G													
			SD-08 Manufacturer’s Instructions															
			Training Course Documentation	3.4.1	G													
			SD-10 Operation and Maintenance															
			Data															
			Space Temperature Control	1.9.9	G													
			System															
			SD-11 Closeout Submittals															
			Qualified Service Organization	3.5	G													
			List															
		23 21 23	SD-02 Shop Drawings															
			System Coordination	2.1.2														
			SD-03 Product Data															
			Base-Mounted, Close Coupled,	2.3.5														
			End Suction Pumps															
			Framed Instructions	2.2.2														
			SD-06 Test Reports															
			Factory Tests	2.9														
			Field Quality Control	3.3														
			Pump Motor/Alignment Report	3.5.3														
			SD-07 Certificates															

SUBMITTAL REGISTER

CONTRACT NO. W912QR26BA021_Specs_Vol1-0000

TITLE AND LOCATION
DSCC DLA REPAIR BUILDING 27 - Columbus, OH P2# 519087

CONTRACTOR

ACTIVITY NO	TRANSMITTAL NO	SPEC SECT	DESCRIPTION ITEM SUBMITTED	PARAGRAPH #	CLASSIFICATION	GOVT OR A/E REVWR	CONTRACTOR: SCHEDULE DATES			CONTRACTOR ACTION			APPROVING AUTHORITY					REMARKS
							SUBMIT	APPROVAL NEEDED BY	MATERIAL NEEDED BY	ACTION CODE	DATE OF ACTION	DATE FWD TO APPR AUTH/ DATE RCD FROM CONTR	DATE FWD TO OTHER REVIEWER	DATE RCD FROM OTH REVIEWER	ACTION CODE	DATE OF ACTION	MAILED TO CONTR/ DATE RCD FRM APPR AUTH	
(a)	(b)	(c)	(d)	(e)	(f)		(g)	(h)	(i)	(j)	(k)	(l)	(m)	(n)	(o)	(p)	(q)	(r)
		23 21 23	Manufacturer's Representative	1.3.1														
			SD-10 Operation and Maintenance															
			Data															
			Operation and Maintenance	3.5.1														
			Manuals															
			Training	3.5.2														
		23 30 00	SD-02 Shop Drawings															
			Detail Drawings	1.4.4														
			SD-03 Product Data															
			Metallic Flexible Duct	2.12.1.1														
			Insulated Nonmetallic Flexible	2.12.1.2														
			Duct Runouts															
			Double Wall Ductwork	2.12.17														
			Fabric Ductwork															
			Duct Connectors	2.12.1.2														
			Duct Access Doors	2.12.2														
			Fire Dampers	2.12.3														
			Manual Balancing Dampers	2.12.4														
			Gravity Backdraft and Relief	2.12.9														
			Dampers															
			Automatic Smoke-Fire Dampers	2.12.6														
			Automatic Smoke Dampers	2.12.7														
			Sound Attenuation Equipment	2.12.11														
			Acoustical Duct Liner															
			Diffusers	2.12.12.1														
			Registers and Grilles	2.12.12.5														

SUBMITTAL REGISTER

CONTRACT NO. W912QR26BA021_Specs_Vol1-0000

TITLE AND LOCATION
DSCC DLA REPAIR BUILDING 27 - Columbus, OH P2# 519087

CONTRACTOR

ACTIVITY NO	TRANSMITTAL NO	SPEC SECT	DESCRIPTION ITEM SUBMITTED	PARAGRAPH #	CLASSIFICATION	GOVT OR A/E REVWR	CONTRACTOR: SCHEDULE DATES			CONTRACTOR ACTION			APPROVING AUTHORITY					REMARKS
							SUBMIT	APPROVAL NEEDED BY	MATERIAL NEEDED BY	ACTION CODE	DATE OF ACTION	DATE FWD TO APPR AUTH/ DATE RCD FROM CONTR	DATE FWD TO OTHER REVIEWER	DATE RCD FROM OTH REVIEWER	ACTION CODE	DATE OF ACTION	MAILED TO CONTR/ DATE RCD FRM APPR AUTH	
(a)	(b)	(c)	(d)	(e)	(f)		(g)	(h)	(i)	(j)	(k)	(l)	(m)	(n)	(o)	(p)	(q)	(r)
		23 30 00	Louvers															
			Air Vents, Penthouses, and															
			Goosenecks															
			Centrifugal Fans															
			In-Line Centrifugal Fans	2.13.1.2														
			Axial Flow Fans															
			Propeller Type Sidewall Fans															
			Centrifugal Type Power Wall															
			Ventilators															
			Centrifugal Type Power Roof															
			Ventilators															
			Propeller Type Power Roof															
			Ventilators															
			Air-Curtain Fans															
			Ceiling Exhaust Fans															
			PL-109-58 label for ceiling		S													
			exhaust fan product															
			Air Handling Units	2.14														
			Room Fan-Coil Units															
			Constant Volume, Single Duct	2.15.2.1														
			Terminal Units															
			Variable Volume, Single Duct	2.15.2.2														
			Terminal Units															
			Variable Volume, Single Duct,	2.15.2.3														
			Fan-Powered Terminal Units															
			Dual Duct Terminal Units	2.15.2.4														

SUBMITTAL REGISTER

CONTRACT NO. W912QR26BA021_Specs_Vol1-0000

TITLE AND LOCATION
DSCC DLA REPAIR BUILDING 27 - Columbus, OH P2# 519087

CONTRACTOR

ACTIVITY NO	TRANSMITTAL NO	SPEC SECT	DESCRIPTION ITEM SUBMITTED	PARAGRAPH #	CLASSIFICATION	GOVT OR A/E REVWR	CONTRACTOR: SCHEDULE DATES			CONTRACTOR ACTION			APPROVING AUTHORITY					REMARKS
							SUBMIT	APPROVAL NEEDED BY	MATERIAL NEEDED BY	ACTION CODE	DATE OF ACTION	DATE FWD TO APPR AUTH/ DATE RCD FROM CONTR	DATE FWD TO OTHER REVIEWER	DATE RCD FROM OTH REVIEWER	ACTION CODE	DATE OF ACTION	MAILED TO CONTR/ DATE RCD FRM APPR AUTH	
(a)	(b)	(c)	(d)	(e)	(f)		(g)	(h)	(i)	(j)	(k)	(l)	(m)	(n)	(o)	(p)	(q)	(r)
		23 30 00	Reheat Units	2.15.2.6														
			Unit Ventilators															
			Energy Recovery Devices															
			Hydronic Modular Panels															
			Prefabricated Radiant-Heating															
			Electric Panels															
			Test Procedures	1.4.5														
			Diagrams	1.2.1.2														
			Indoor Air Quality for Duct	2.12.1	S													
			Sealants															
			SD-06 Test Reports															
			Performance Tests	3.12														
			Damper Acceptance Test	3.10														
			SD-07 Certificates															
			Bolts															
			Ozone Depleting Substances	1.4.3														
			Technician Certification															
			SD-08 Manufacturer’s Instructions															
			Manufacturer's Installation	3.2														
			Instructions															
			Operation and Maintenance	3.15.2														
			Training															
			SD-10 Operation and Maintenance															
			Data															
			Operation and Maintenance	3.15.1														
			Manuals															

SUBMITTAL REGISTER

CONTRACT NO. W912QR26BA021_Specs_Vol1-0000

TITLE AND LOCATION
DSCC DLA REPAIR BUILDING 27 - Columbus, OH P2# 519087

CONTRACTOR

ACTIVITY NO	TRANSMITTAL NO	SPEC SECT	DESCRIPTION ITEM SUBMITTED	PARAGRAPH #	CLASSIFICATION	GOVT OR A/E REVWR	CONTRACTOR: SCHEDULE DATES			CONTRACTOR ACTION			APPROVING AUTHORITY					MAILED TO CONTR/ DATE RCD FRM APPR AUTH	REMARKS
							SUBMIT	APPROVAL NEEDED BY	MATERIAL NEEDED BY	ACTION CODE	DATE OF ACTION	DATE FWD TO APPR AUTH/ DATE RCD FROM CONTR	DATE FWD TO OTHER REVIEWER	DATE RCD FROM OTH REVIEWER	ACTION CODE	DATE OF ACTION		
(a)	(b)	(c)	(d)	(e)	(f)		(g)	(h)	(i)	(j)	(k)	(l)	(m)	(n)	(o)	(p)		(q)	(r)
		23 30 00	Fire Dampers	2.12.3															
			Manual Balancing Dampers	2.12.4															
			Automatic Smoke-Fire Dampers	2.12.6															
			Automatic Smoke Dampers	2.12.7															
			Centrifugal Fans																
			In-Line Centrifugal Fans	2.13.1.2															
			Axial Flow Fans																
			Propeller Type Sidewall Fans																
			Centrifugal Type Power Wall																
			Ventilators																
			Centrifugal Type Power Roof																
			Ventilators																
			Propeller Type Power Roof																
			Ventilators																
			Air-Curtain Fans																
			Ceiling Exhaust Fans																
			Air Handling Units	2.14															
			Room Fan-Coil Units																
			Constant Volume, Single Duct	2.15.2.1															
			Terminal Units																
			Variable Volume, Single Duct	2.15.2.2															
			Terminal Units																
			Variable Volume, Single Duct,	2.15.2.3															
			Fan-Powered Terminal Units																
			Dual Duct Terminal Units	2.15.2.4															
			Reheat Units	2.15.2.6															

SUBMITTAL REGISTER

CONTRACT NO. W912QR26BA021_Specs_Vol1-0000

TITLE AND LOCATION
DSCC DLA REPAIR BUILDING 27 - Columbus, OH P2# 519087

CONTRACTOR

ACTIVITY NO	TRANSMITTAL NO	SPEC SECT	DESCRIPTION ITEM SUBMITTED	PARAG # RAPH	CLASSIFICATION	GOVT OR A/E REVWR	CONTRACTOR: SCHEDULE DATES			CONTRACTOR ACTION			APPROVING AUTHORITY					REMARKS
							SUBMIT	APPROVAL NEEDED BY	MATERIAL NEEDED BY	ACTION CODE	DATE OF ACTION	DATE FWD TO APPR AUTH/ DATE RCD FROM CONTR	DATE FWD TO OTHER REVIEWER	DATE RCD FROM OTH REVIEWER	ACTION CODE	DATE OF ACTION	MAILED TO CONTR/ DATE RCD FRM APPR AUTH	
(a)	(b)	(c)	(d)	(e)	(f)		(g)	(h)	(i)	(j)	(k)	(l)	(m)	(n)	(o)	(p)	(q)	(r)
		23 30 00	Unit Ventilators															
			Energy Recovery Devices															
			Hydronic Modular Panels															
			Prefabricated Radiant-Heating															
			Electric Panels															
			SD-11 Closeout Submittals															
			Indoor Air Quality During	3.13	S													
			Construction															
		23 36 00.00 40	SD-01 Preconstruction Submittals															
			Records of Existing Conditions	1.2.1														
			SD-02 Shop Drawings															
			Bypass Single-Duct Air Terminal		G ae													
			Units															
			Dual-Duct Air Terminal Units		G													
			Fan-Powered Air Terminal Units		G													
			Induction Air Terminal Units		G													
			Shutoff Single-Duct Air Terminal		G ae													
			Units															
			Integral-Diffuser Air Terminal	2.1.7	G ae													
			Units															
			High-Pressure Dual-Duct Mixing		G													
			Boxes															
			Low-Pressure Dual-Duct Mixing		G													
			Boxes															
			SD-03 Product Data															

SUBMITTAL REGISTER

CONTRACT NO. W912QR26BA021_Specs_Vol1-0000

TITLE AND LOCATION
DSCC DLA REPAIR BUILDING 27 - Columbus, OH P2# 519087

CONTRACTOR

ACTIVITY NO	TRANSMITTAL NO	SPEC SECT	DESCRIPTION ITEM SUBMITTED	PARAG # PARAPH	CLASSIFICATION	GOVT OR A/E REVWR	CONTRACTOR: SCHEDULE DATES			CONTRACTOR ACTION			APPROVING AUTHORITY					REMARKS
							SUBMIT	APPROVAL NEEDED BY	MATERIAL NEEDED BY	ACTION CODE	DATE OF ACTION	DATE FWD TO APPR AUTH/ DATE RCD FROM CONTR	DATE FWD TO OTHER REVIEWER	DATE RCD FROM OTH REVIEWER	ACTION CODE	DATE OF ACTION	MAILED TO CONTR/ DATE RCD FRM APPR AUTH	
(a)	(b)	(c)	(d)	(e)	(f)		(g)	(h)	(i)	(j)	(k)	(l)	(m)	(n)	(o)	(p)	(q)	(r)
		23 36 00.00 40	Bypass Single-Duct Air Terminal		G	ae												
			Units															
			Dual-Duct Air Terminal Units		G													
			Fan-Powered Air Terminal Units		G													
			Induction Air Terminal Units		G													
			Shutoff Single-Duct Air Terminal		G	ae												
			Units															
			Integral-Diffuser Air Terminal	2.1.7	G	ae												
			Units															
			High-Pressure Dual-Duct Mixing		G													
			Boxes															
			Low-Pressure Dual-Duct Mixing		G													
			Boxes															
			SD-06 Test Reports															
			Test Report	3.2														
			SD-07 Certificates															
			List of Spare Parts	1.2.1														
			SD-10 Operation and Maintenance															
			Data															
			Operation and Maintenance	3.4.1														
			Manuals															
			SD-11 Closeout Submittals															
			Record Drawings	3.4.1														
		23 37 13.00 40	SD-01 Preconstruction Submittals															
			Material, Equipment, and Fixture	2.2.1														
			Lists															

SUBMITTAL REGISTER

CONTRACT NO. W912QR26BA021_Specs_Vol1-0000

TITLE AND LOCATION
DSCC DLA REPAIR BUILDING 27 - Columbus, OH P2# 519087

CONTRACTOR

ACTIVITY NO	TRANSMITTAL NO	SPEC SECT	DESCRIPTION ITEM SUBMITTED	PARAGRAPH #	CLASSIFICATION	GOVT OR A/E REVWR	CONTRACTOR: SCHEDULE DATES			CONTRACTOR ACTION			APPROVING AUTHORITY					REMARKS
							SUBMIT	APPROVAL NEEDED BY	MATERIAL NEEDED BY	ACTION CODE	DATE OF ACTION	DATE FWD TO APPR AUTH/ DATE RCD FROM CONTR	DATE FWD TO OTHER REVIEWER	DATE RCD FROM OTH REVIEWER	ACTION CODE	DATE OF ACTION	MAILED TO CONTR/ DATE RCD FRM APPR AUTH	
(a)	(b)	(c)	(d)	(e)	(f)		(g)	(h)	(i)	(j)	(k)	(l)	(m)	(n)	(o)	(p)	(q)	(r)
		23 37 13.00 40	Records of Existing Conditions	2.2.1														
			SD-02 Shop Drawings															
			Fabrication Drawings	2.2.1														
			Installation Drawings	3.1														
			SD-03 Product Data															
			Equipment and Performance	2.1														
			Data															
			SD-04 Samples															
			Manufacturer's Standard Color	2.2.1														
			Chart															
			SD-10 Operation and Maintenance															
			Data															
			Type TS Supply Troffer															
			Type TSR Combination Supply															
			and Return Troffer															
		23 57 10.00 10	SD-02 Shop Drawings															
			Heating System															
			SD-03 Product Data															
			Spare Parts	1.5														
			Welding	3.4														
			Framed Instructions	3.19														
			SD-06 Test Reports															
			Testing and Cleaning	3.18														
			Water Treatment Testing															
			SD-07 Certificates															
			Bolts	2.2.7.3														

SUBMITTAL REGISTER

CONTRACT NO. W912QR26BA021_Specs_Vol1-0000

TITLE AND LOCATION
DSCC DLA REPAIR BUILDING 27 - Columbus, OH P2# 519087

CONTRACTOR

ACTIVITY NO	TRANSMITTAL NO	SPEC SECT	DESCRIPTION ITEM SUBMITTED	PARAG # RAPH	CLASSIFICATION	GOVT OR A/E REVWR	CONTRACTOR: SCHEDULE DATES			CONTRACTOR ACTION			APPROVING AUTHORITY					REMARKS
							SUBMIT	APPROVAL NEEDED BY	MATERIAL NEEDED BY	ACTION CODE	DATE OF ACTION	DATE FWD TO APPR AUTH/ DATE RCD FROM CONTR	DATE FWD TO OTHER REVIEWER	DATE RCD FROM OTH REVIEWER	ACTION CODE	DATE OF ACTION	MAILED TO CONTR/ DATE RCD FRM APPR AUTH	
(a)	(b)	(c)	(d)	(e)	(f)		(g)	(h)	(i)	(j)	(k)	(l)	(m)	(n)	(o)	(p)	(q)	(r)
		23 57 10.00 10	SD-10 Operation and Maintenance															
			Data															
			Operation and Maintenance	3.20	G													
			Manuals															
		23 64 10	SD-03 Product Data															
			Posted Instructions	3.1.3														
			Verification of Dimensions	1.6.1														
			System Performance Tests	3.6														
			Demonstrations	3.7														
			Refrigerant	2.6.1														
			Scroll Type Water Chiller	2.4.1														
			SD-06 Test Reports															
			Field Acceptance Testing	3.5														
			Water Chiller - Field Acceptance	3.5.2														
			Test Report															
			Factory Tests	2.9														
			System Performance Tests	3.6														
			Factory Test Schedule	3.2														
			SD-07 Certificates															
			Refrigeration System	3.1.9														
			Refrigeration Technician	1.3.1														
			Certification															
			SD-10 Operation and Maintenance															
			Data															
			Operation and Maintenance	3.7														
			Manuals															

SUBMITTAL REGISTER

CONTRACT NO. W912QR26BA021_Specs_Vol1-0000

TITLE AND LOCATION
DSCC DLA REPAIR BUILDING 27 - Columbus, OH P2# 519087

CONTRACTOR

ACTIVITY NO	TRANSMITTAL NO	SPEC SECT	DESCRIPTION ITEM SUBMITTED	PARAGRAPH #	CLASSIFICATION	GOVT OR A/E REVWR	CONTRACTOR: SCHEDULE DATES			CONTRACTOR ACTION			APPROVING AUTHORITY					REMARKS
							SUBMIT	APPROVAL NEEDED BY	MATERIAL NEEDED BY	ACTION CODE	DATE OF ACTION	DATE FWD TO APPR AUTH/ DATE RCD FROM CONTR	DATE FWD TO OTHER REVIEWER	DATE RCD FROM OTH REVIEWER	ACTION CODE	DATE OF ACTION	MAILED TO CONTR/ DATE RCD FRM APPR AUTH	
(a)	(b)	(c)	(d)	(e)	(f)		(g)	(h)	(i)	(j)	(k)	(l)	(m)	(n)	(o)	(p)	(q)	(r)
		23 64 10	Training Course Schedule	3.7														
			SD-11 Closeout Submittals															
			Indoor Air Quality During	3.4	S													
			Construction															
		23 64 26	SD-03 Product Data															
			Grooved Mechanical Connections	2.2.2.4														
			For Steel															
			Grooved Mechanical Connections	2.6.3														
			For Copper															
			Calibrated Balancing Valves	2.7.8														
			Automatic Flow Control Valves	2.7.9														
			Water Temperature Mixing Valve	2.7.10														
			Water Temperature Regulating	2.7.11														
			Valves															
			Water Pressure Reducing Valve	2.7.12														
			Pressure Relief Valve	2.7.13														
			Combination Pressure and	2.7.14														
			Temperature Relief Valves															
			Expansion Joints	2.8.9														
			Pumps	2.9														
			Combination Strainer and Pump	2.8.3														
			Suction Diffuser															
			Expansion Tanks	2.10														
			Air Separator Tanks	2.11														
			Water Treatment Systems	2.12														
			SD-06 Test Reports															

SUBMITTAL REGISTER

CONTRACT NO. W912QR26BA021_Specs_Vol1-0000

TITLE AND LOCATION
DSCC DLA REPAIR BUILDING 27 - Columbus, OH P2# 519087

CONTRACTOR

ACTIVITY NO	TRANSMITTAL NO	SPEC SECT	DESCRIPTION ITEM SUBMITTED	PARAGRAPH #	CLASSIFICATION	GOVT OR A/E REVWR	CONTRACTOR: SCHEDULE DATES			CONTRACTOR ACTION			APPROVING AUTHORITY					REMARKS
							SUBMIT	APPROVAL NEEDED BY	MATERIAL NEEDED BY	ACTION CODE	DATE OF ACTION	DATE FWD TO APPR AUTH/ DATE RCD FROM CONTR	DATE FWD TO OTHER REVIEWER	DATE RCD FROM OTH REVIEWER	ACTION CODE	DATE OF ACTION	MAILED TO CONTR/ DATE RCD FRM APPR AUTH	
(a)	(b)	(c)	(d)	(e)	(f)		(g)	(h)	(i)	(j)	(k)	(l)	(m)	(n)	(o)	(p)	(q)	(r)
		23 64 26	Piping Welds NDE Report	3.1.1.3														
			Pressure Tests Reports	3.5.2														
			Condenser Water Quality Test															
			Reports															
			One-Year Inspection Report For															
			Cooling Water															
			SD-07 Certificates															
			Employer's Record Documents	3.1.1.1														
			(For Welding)															
			Welding Procedures and	3.1.1.2														
			Qualifications															
			Piping for Steam and Condensate															
			Piping for High-Pressure															
			Compressed-Air Systems															
			Fittings															
			Unions															
			Flanges															
			Gaskets															
			Bolting															
			SD-08 Manufacturer’s Instructions															
			Lesson plan for the Instruction	3.6														
			Course															
			SD-10 Operation and Maintenance															
			Data															
			Water Treatment Systems	2.12														
			Calibrated Balancing Valves	2.7.8														

SUBMITTAL REGISTER

CONTRACT NO. W912QR26BA021_Specs_Vol1-0000

TITLE AND LOCATION
DSCC DLA REPAIR BUILDING 27 - Columbus, OH P2# 519087

CONTRACTOR

ACTIVITY NO	TRANSMITTAL NO	SPEC SECT	DESCRIPTION ITEM SUBMITTED	PARAG # RAPH	CLASSIFICATION	GOVT OR A/E REVWR	CONTRACTOR: SCHEDULE DATES			CONTRACTOR ACTION			APPROVING AUTHORITY					MAILED TO CONTR/ DATE RCD FRM APPR AUTH	REMARKS
							SUBMIT	APPROVAL NEEDED BY	MATERIAL NEEDED BY	ACTION CODE	DATE OF ACTION	DATE FWD TO APPR AUTH/ DATE RCD FROM CONTR	DATE FWD TO OTHER REVIEWER	DATE RCD FROM OTH REVIEWER	ACTION CODE	DATE OF ACTION		
(a)	(b)	(c)	(d)	(e)	(f)		(g)	(h)	(i)	(j)	(k)	(l)	(m)	(n)	(o)	(p)		(q)	(r)
		23 64 26	Automatic Flow Control Valves	2.7.9															
			Water Temperature Mixing Valve	2.7.10															
			Water Temperature Regulating	2.7.11															
			Valves																
			Water Pressure Reducing Valve	2.7.12															
			Pressure Relief Valve	2.7.13															
			Combination Pressure and	2.7.14															
			Temperature Relief Valves																
			Expansion Joints	2.8.9															
			Pumps	2.9															
			Combination Strainer and Pump	2.8.3															
			Suction Diffuser																
			Expansion Tanks	2.10															
			Air Separator Tanks	2.11															
		25 05 11.01	SD-01 Preconstruction Submittals																
			Wireless and Wired Broadcast	3.2.2.3	G														
			Communication Request																
			Device Account Lock Exception	3.3.2	G														
			Request																
			Multiple Ethernet Connection	3.2.4.2	G														
			Device Request																
			Contractor Computer	1.10.1.6	G														
			Cybersecurity Compliance																
			Statements																

SUBMITTAL REGISTER

CONTRACT NO. W912QR26BA021_Specs_Vol1-0000

TITLE AND LOCATION
DSCC DLA REPAIR BUILDING 27 - Columbus, OH P2# 519087

CONTRACTOR

ACTIVITY NO	TRANSMITTAL NO	SPEC SECT	DESCRIPTION ITEM SUBMITTED	PARAG # RAPH	CLASSIFICATION	GOVT OR A/E REVWR	CONTRACTOR: SCHEDULE DATES			CONTRACTOR ACTION			APPROVING AUTHORITY					REMARKS
							SUBMIT	APPROVAL NEEDED BY	MATERIAL NEEDED BY	ACTION CODE	DATE OF ACTION	DATE FWD TO APPR AUTH/ DATE RCD FROM CONTR	DATE FWD TO OTHER REVIEWER	DATE RCD FROM OTH REVIEWER	ACTION CODE	DATE OF ACTION	MAILED TO CONTR/ DATE RCD FRM APPR AUTH	
(a)	(b)	(c)	(d)	(e)	(f)		(g)	(h)	(i)	(j)	(k)	(l)	(m)	(n)	(o)	(p)	(q)	(r)
		25 05 11.01	Contractor Temporary Network	1.10.6	G													
			Cybersecurity Compliance															
			Statements															
			Cybersecurity Interconnection	1.8.2	G													
			Schedule															
			Protection of Information At Rest	3.7.4	G													
			Proposal															
			Proposed STIG and SRG	1.8.1	G													
			Applicability Report															
			Pre-Construction Control System	1.8.4	G													
			Inventory Report															
			SD-02 Shop Drawings															
			Network Communication, Ports,	1.8.3	G													
			Protocols and Services Report															
			Cybersecurity Network (Riser)	1.8.6	G													
			Diagram															
			SD-03 Product Data															
			Control System Cybersecurity	1.8.8	G													
			Documentation															
			SD-06 Test Reports															
			Control System Cybersecurity	3.14.1	G													
			Testing Procedures															
			Control System Cybersecurity	3.14.3	G													
			Testing Report															
			SD-07 Certificates															
			Software Licenses	1.9	G													

SUBMITTAL REGISTER

CONTRACT NO. W912QR26BA021_Specs_Vol1-0000

TITLE AND LOCATION
DSCC DLA REPAIR BUILDING 27 - Columbus, OH P2# 519087

CONTRACTOR

ACTIVITY NO	TRANSMITTAL NO	SPEC SECT	DESCRIPTION ITEM SUBMITTED	PARAGRAPH #	CLASSIFICATION	GOVT OR A/E REVWR	CONTRACTOR: SCHEDULE DATES			CONTRACTOR ACTION			APPROVING AUTHORITY					MAILED TO CONTR/ DATE RCD FRM APPR AUTH	REMARKS
							SUBMIT	APPROVAL NEEDED BY	MATERIAL NEEDED BY	ACTION CODE	DATE OF ACTION	DATE FWD TO APPR AUTH/ DATE RCD FROM CONTR	DATE FWD TO OTHER REVIEWER	DATE RCD FROM OTH REVIEWER	ACTION CODE	DATE OF ACTION		
(a)	(b)	(c)	(d)	(e)	(f)		(g)	(h)	(i)	(j)	(k)	(l)	(m)	(n)	(o)	(p)		(q)	(r)
		25 05 11.01	SD-11 Closeout Submittals																
			Confidential Password Report	3.4.5.5	G														
			Enclosure Keys	3.3.7	G														
			Software and Configuration	1.8.5	G														
			Backups																
			Auditing Front End Software	3.5.3	G														
			Device Audit Record Upload	3.5.4.2	G														
			Software																
			System Maintenance Tool	3.9	G														
			Software																
			Control System Scanning Tools	3.11.2	G														
			STIG, SRG and Vendor Guide	1.8.7	G														
			Compliance Result Report																
			Final Control System Inventory	1.8.4	G														
			Report																
			Integrity Verification Software	3.13.2	G														
		26 05 13	SD-01 Preconstruction Submittals																
			List of Splices and Terminations	1.4.1															
			to be Installed by																
			Splicer/Terminator																
			SD-02 Shop Drawings																
			Pulling Plan	3.1.3															
			SD-03 Product Data																
			Single-Conductor Shielded	2.1.2															
			Cables																
			Ground Conductors	2.3.1															

SUBMITTAL REGISTER

CONTRACT NO. W912QR26BA021_Specs_Vol1-0000

TITLE AND LOCATION
DSCC DLA REPAIR BUILDING 27 - Columbus, OH P2# 519087

CONTRACTOR

ACTIVITY NO	TRANSMITTAL NO	SPEC SECT	DESCRIPTION ITEM SUBMITTED	PARAGRAPH #	CLASSIFICATION	GOVT OR A/E REVWR	CONTRACTOR: SCHEDULE DATES			CONTRACTOR ACTION			APPROVING AUTHORITY					MAILED TO CONTR/ DATE RCD FRM APPR AUTH	REMARKS
							SUBMIT	APPROVAL NEEDED BY	MATERIAL NEEDED BY	ACTION CODE	DATE OF ACTION	DATE FWD TO APPR AUTH/ DATE RCD FROM CONTR	DATE FWD TO OTHER REVIEWER	DATE RCD FROM OTH REVIEWER	ACTION CODE	DATE OF ACTION		
(a)	(b)	(c)	(d)	(e)	(f)		(g)	(h)	(i)	(j)	(k)	(l)	(m)	(n)	(o)	(p)		(q)	(r)
		26 05 13	Cable Supports and Fittings	2.5.1															
			Cable Grips																
			Cable Tags	2.5.2															
			Fireproof Tape	2.5.3															
			Splices	2.4.2															
			Terminations	2.4.3															
			Metal-Clad and Armored Cable																
			Jumper Cables																
			Cable Identification	3.1.7															
			SD-05 Design Data																
			Cable Pulling Calculations	3.1.2															
			Cleat Manufacturer's Calculations																
			SD-06 Test Reports																
			Factory Inspection and Tests	1.6															
			Field Acceptance Testing	3.3															
			Wire And Cable Test Record	3.3.1															
			Form																
			Phase Rotation Test Record	3.1.1															
			Form																
			SD-07 Certificates																
			Splicer/Terminator Certifications	1.5.3															
			SD-08 Manufacturer’s Instructions																
			Terminations	2.4.3															
			Splices	2.4.2															
		26 05 48	SD-02 Shop Drawings																
			Equipment Requirements	2.1															

SUBMITTAL REGISTER

CONTRACT NO. W912QR26BA021_Specs_Vol1-0000

TITLE AND LOCATION
DSCC DLA REPAIR BUILDING 27 - Columbus, OH P2# 519087

CONTRACTOR

ACTIVITY NO	TRANSMITTAL NO	SPEC SECT	DESCRIPTION ITEM SUBMITTED	PARAG # RAPH	CLASSIFICATION	GOVT OR A/E REVWR	CONTRACTOR: SCHEDULE DATES			CONTRACTOR ACTION			APPROVING AUTHORITY					REMARKS
							SUBMIT	APPROVAL NEEDED BY	MATERIAL NEEDED BY	ACTION CODE	DATE OF ACTION	DATE FWD TO APPR AUTH/ DATE RCD FROM CONTR	DATE FWD TO OTHER REVIEWER	DATE RCD FROM OTH REVIEWER	ACTION CODE	DATE OF ACTION	MAILED TO CONTR/ DATE RCD FRM APPR AUTH	
(a)	(b)	(c)	(d)	(e)	(f)		(g)	(h)	(i)	(j)	(k)	(l)	(m)	(n)	(o)	(p)	(q)	(r)
		26 05 48	Lighting Fixtures	3.4														
			SD-03 Product Data															
			Supports and Attachments	1.2.3														
			Equipment Requirements	2.1														
			Lighting Fixtures	3.4														
			Flexible Fittings	2.4														
			Anchors	3.5														
			Isolation And Energy Dissipation Systems	2.1														
			SD-05 Design Data															
			Design Calculations	1.2.3														
			Design Drawings	1.2.3														
			Independent Design Review Report															
			SD-06 Test Reports															
			Anchors	3.5														
			SD-07 Certificates															
			ICC ES AC156 Shake Table Test	3.7														
		26 05 73	SD-01 Preconstruction Submittals															
			Field Examination Plan	3.1														
			Arc Flash Label Formats	3.2.9														
			SD-06 Test Reports															
			Field Examination	3.1.1														
			SD-07 Certificates															
			System Analyzer	1.4.1														
			SD-11 Closeout Submittals															

SUBMITTAL REGISTER

CONTRACT NO. W912QR26BA021_Specs_Vol1-0000

TITLE AND LOCATION
DSCC DLA REPAIR BUILDING 27 - Columbus, OH P2# 519087

CONTRACTOR

ACTIVITY NO	TRANSMITTAL NO	SPEC SECT	DESCRIPTION ITEM SUBMITTED	PARAG # RAPH	CLASSIFICATION	GOVT OR A/E REVWR	CONTRACTOR: SCHEDULE DATES			CONTRACTOR ACTION			APPROVING AUTHORITY				MAILED TO CONTR/	REMARKS
							SUBMIT	APPROVAL NEEDED BY	MATERIAL NEEDED BY	ACTION CODE	DATE OF ACTION	DATE FWD TO APPR AUTH/ DATE RCD FROM CONTR	DATE FWD TO OTHER REVIEWER	DATE RCD FROM OTH REVIEWER	ACTION CODE	DATE OF ACTION	DATE RCD FRM APPR AUTH	
(a)	(b)	(c)	(d)	(e)	(f)		(g)	(h)	(i)	(j)	(k)	(l)	(m)	(n)	(o)	(p)	(q)	(r)
		26 05 73	Model Files	3.3														
			Load Flow Study	3.2.4														
			Fault Current Study	3.2.5														
			System Coordination Study	3.2.6														
			Arc Flash Hazard Study	3.2.7														
		26 08 00	SD-06 Test Reports															
			Acceptance Tests and	3.1														
			Inspections															
			SD-07 Certificates															
			Qualifications	1.4.1														
			Acceptance Test and Inspections	1.4.3														
			Procedure															
		26 12 19	SD-02 Shop Drawings															
			Pad-mounted Transformer	1.5.1														
			Drawings															
			SD-03 Product Data															
			Pad-mounted Transformers	2.2														
			SD-06 Test Reports															
			Acceptance Checks and Tests	3.7.1														
			SD-07 Certificates															
			Transformer Efficiencies	2.2.2.1														
			SD-09 Manufacturer’s Field															
			Reports															
			Transformer Test Schedule	2.8.1														
			Design Tests	2.8.2														
			Routine and Other Tests	2.8.3														

SUBMITTAL REGISTER

CONTRACT NO. W912QR26BA021_Specs_Vol1-0000

TITLE AND LOCATION
DSCC DLA REPAIR BUILDING 27 - Columbus, OH P2# 519087

CONTRACTOR

ACTIVITY NO	TRANSMITTAL NO	SPEC SECT	DESCRIPTION ITEM SUBMITTED	PARAG # RAPH	CLASSIFICATION	GOVT OR A/E REVWR	CONTRACTOR: SCHEDULE DATES			CONTRACTOR ACTION			APPROVING AUTHORITY					REMARKS
							SUBMIT	APPROVAL NEEDED BY	MATERIAL NEEDED BY	ACTION CODE	DATE OF ACTION	DATE FWD TO APPR AUTH/ DATE RCD FROM CONTR	DATE FWD TO OTHER REVIEWER	DATE RCD FROM OTH REVIEWER	ACTION CODE	DATE OF ACTION	MAILED TO CONTR/ DATE RCD FRM APPR AUTH	
(a)	(b)	(c)	(d)	(e)	(f)		(g)	(h)	(i)	(j)	(k)	(l)	(m)	(n)	(o)	(p)	(q)	(r)
		26 12 19	SD-10 Operation and Maintenance															
			Data															
			Transformer(s)	1.6.1														
		26 20 00	SD-02 Shop Drawings															
			Panelboards	2.14														
			Wireways	2.29														
			Marking Strips	3.1.8.1														
			SD-03 Product Data															
			Switches	2.11														
			Receptacles	2.13														
			Circuit Breakers	2.14.3														
			Fuses	2.12														
			Motor Controllers	2.19														
			Manual Motor Starters	2.20														
			Surge Protective Devices															
			SD-06 Test Reports															
			600-volt Wiring Test	3.5.2														
			Grounding System Test	3.5.4														
			Ground-fault Receptacle Test	3.5.3														
			SD-07 Certificates															
			Fuses	2.12														
		26 29 23	SD-02 Shop Drawings															
			Schematic Diagrams	1.5.1														
			Interconnecting Diagrams	1.5.2														
			Installation Drawings	1.5.3														
			As-Built Drawings	1.5.3														

SUBMITTAL REGISTER

CONTRACT NO. W912QR26BA021_Specs_Vol1-0000

TITLE AND LOCATION
DSCC DLA REPAIR BUILDING 27 - Columbus, OH P2# 519087

CONTRACTOR

ACTIVITY NO	TRANSMITTAL NO	SPEC SECT	DESCRIPTION ITEM SUBMITTED	PARAG # PARAPH	CLASSIFICATION	GOVT OR A/E REVWR	CONTRACTOR: SCHEDULE DATES			CONTRACTOR ACTION			APPROVING AUTHORITY					MAILED TO CONTR/ DATE RCD FRM APPR AUTH	REMARKS
							SUBMIT	APPROVAL NEEDED BY	MATERIAL NEEDED BY	ACTION CODE	DATE OF ACTION	DATE FWD TO APPR AUTH/ DATE RCD FROM CONTR	DATE FWD TO OTHER REVIEWER	DATE RCD FROM OTH REVIEWER	ACTION CODE	DATE OF ACTION		
(a)	(b)	(c)	(d)	(e)	(f)		(g)	(h)	(i)	(j)	(k)	(l)	(m)	(n)	(o)	(p)		(q)	(r)
		26 29 23	SD-03 Product Data																
			Adjustable Speed Drives	2.1															
			Wires and Cables	2.3															
			Equipment Schedule	1.5.4															
			SD-06 Test Reports																
			ASD Test	3.3.1															
			Performance Verification Tests	3.3.2															
			Endurance Test	3.3.3															
			SD-08 Manufacturer's Instructions																
			Installation instructions	1.5.5															
			SD-09 Manufacturer's Field																
			Reports																
			ASD Test Plan	2.5.1															
			Standard Products	1.5.6															
			SD-10 Operation and Maintenance																
			Data																
			Adjustable Speed Drives	2.1															
		26 51 00	SD-02 Shop Drawings																
			Luminaire Drawings	1.5.1															
			Occupancy/Vacancy Sensor	1.5.8	S														
			Coverage Layout																
			Lighting Control System One-Line	1.7.2															
			Diagram																
			Sequence of Operation for	2.5.1															
			Lighting Control System																
			SD-03 Product Data																

SUBMITTAL REGISTER

CONTRACT NO. W912QR26BA021_Specs_Vol1-0000

TITLE AND LOCATION
DSCC DLA REPAIR BUILDING 27 - Columbus, OH P2# 519087

CONTRACTOR

ACTIVITY NO	TRANSMITTAL NO	SPEC SECT	DESCRIPTION ITEM SUBMITTED	PARAGRAPH #	CLASSIFICATION	GOVT OR A/E REVWR	CONTRACTOR: SCHEDULE DATES			CONTRACTOR ACTION			APPROVING AUTHORITY					REMARKS
							SUBMIT	APPROVAL NEEDED BY	MATERIAL NEEDED BY	ACTION CODE	DATE OF ACTION	DATE FWD TO APPR AUTH/ DATE RCD FROM CONTR	DATE FWD TO OTHER REVIEWER	DATE RCD FROM OTH REVIEWER	ACTION CODE	DATE OF ACTION	MAILED TO CONTR/ DATE RCD FRM APPR AUTH	
(a)	(b)	(c)	(d)	(e)	(f)		(g)	(h)	(i)	(j)	(k)	(l)	(m)	(n)	(o)	(p)	(q)	(r)
		26 51 00	Luminaires	2.2														
			Light Sources	2.3														
			LED Drivers	2.4														
			Luminaire Warranty	1.6.1														
			Lighting Controls Warranty	1.6.2														
			Local Area Controller															
			Lighting Relay Panel															
			Lighting Control Panel	2.5.1.1.1														
			Gateway	2.5.1.1.2														
			Lighting Contactor															
			Switches	2.5.2.1														
			Digital Switch Timers															
			Wall Box Dimmers	2.5.2.2														
			Scene Wallstations	2.5.2.3														
			Occupancy/Vacancy Sensors	2.5.2.4														
			Photosensors															
			Time Clocks															
			Power Packs	2.5.2.4.3														
			Power Hook Luminaire Hangers	2.7.4														
			Mini Inverters															
			Exit Signs	2.6.1														
			Emergency Drivers	2.6.2														
			Energy Star Label For Residential		S													
			Luminaires															
			Linear LED Lamps															
			SD-05 Design Data															

SUBMITTAL REGISTER

CONTRACT NO. W912QR26BA021_Specs_Vol1-0000

TITLE AND LOCATION
DSCC DLA REPAIR BUILDING 27 - Columbus, OH P2# 519087

CONTRACTOR

ACTIVITY NO	TRANSMITTAL NO	SPEC SECT	DESCRIPTION ITEM SUBMITTED	PARAG # RAPH	CLASSIFICATION	GOVT OR A/E REVWR	CONTRACTOR: SCHEDULE DATES			CONTRACTOR ACTION			APPROVING AUTHORITY					REMARKS
							SUBMIT	APPROVAL NEEDED BY	MATERIAL NEEDED BY	ACTION CODE	DATE OF ACTION	DATE FWD TO APPR AUTH/ DATE RCD FROM CONTR	DATE FWD TO OTHER REVIEWER	DATE RCD FROM OTH REVIEWER	ACTION CODE	DATE OF ACTION	MAILED TO CONTR/ DATE RCD FRM APPR AUTH	
(a)	(b)	(c)	(d)	(e)	(f)		(g)	(h)	(i)	(j)	(k)	(l)	(m)	(n)	(o)	(p)	(q)	(r)
		26 51 00	Luminaire Design Data	1.5.2														
			Photometric Plan															
			SD-06 Test Reports															
			ANSI/IES LM-79 Test Report	1.5.3														
			ANSI/IES LM-80 Test Report	1.5.4														
			ANSI/IES TM-21 Test Report	1.5.5														
			ANSI/IES TM-30 Test Report	1.5.6														
			Occupancy/Vacancy Sensor	3.2.1.1														
			Verification Test															
			Photosensor Verification Test	3.2.1.1														
			SD-07 Certificates															
			LED Driver and Dimming Switch	1.5.7														
			Compatibility Certificate															
			SD-10 Operation and Maintenance															
			Data															
			Lighting System	1.7.1														
			Lighting Control System	1.7.2														
			Maintenance Staff Training Plan	3.3.2.1														
			End-User Training Plan	3.3.2.2														
		28 31 76	SD-01 Preconstruction Submittals															
			Qualified Fire Protection Engineer	1.3.2	G	G												
			(QFPE)															
			Fire alarm system designer	1.9.2.1	G	G												
			Supervisor	1.9.2.2	G	G												
			Technician	1.9.2.3	G	G												
			Installer	1.9.2.4	G	G												

SUBMITTAL REGISTER

CONTRACT NO.

TITLE AND LOCATION
DSCC DLA REPAIR BUILDING 27 - Columbus, OH P2# 519087

CONTRACTOR

ACTIVITY NO	TRANSMITTAL NO	SPEC SECT	DESCRIPTION ITEM SUBMITTED	PARAGRAPH #	CLASSIFICATION	GOVT OR A/E REVWR	CONTRACTOR: SCHEDULE DATES			CONTRACTOR ACTION			APPROVING AUTHORITY					REMARKS
							SUBMIT	APPROVAL NEEDED BY	MATERIAL NEEDED BY	ACTION CODE	DATE OF ACTION	DATE FWD TO APPR AUTH/ DATE RCD FROM CONTR	DATE FWD TO OTHER REVIEWER	DATE RCD FROM OTH REVIEWER	ACTION CODE	DATE OF ACTION	MAILED TO CONTR/ DATE RCD FRM APPR AUTH	
(a)	(b)	(c)	(d)	(e)	(f)		(g)	(h)	(i)	(j)	(k)	(l)	(m)	(n)	(o)	(p)	(q)	(r)
		28 31 76	Test Technician	1.9.2.5	G	G												
			Fire Alarm System Site-Specific	1.7	G	G												
			Software Acknowledgement															
			SD-02 Shop Drawings															
			Nameplates	1.9.1.3	G	G												
			Instructions	2.2.4	G	G												
			Wiring Diagrams	1.9.1.4	G	G												
			System Layout	1.9.1.5	G	G												
			Notification Appliances	1.9.1.6	G	G												
			Initiating devices	1.9.1.7	G	G												
			Amplifiers	1.9.1.8	G	G												
			Battery Power	1.9.1.9	G	G												
			Voltage Drop Calculations	1.9.1.10	G	G												
			SD-03 Product Data															
			Fire Alarm and Mass Notification	2.3	G	G												
			Control Unit (FMCU)															
			Local Operating Console (LOC)	1.4.4	G	G												
			Amplifiers	1.9.1.8	G	G												
			Tone Generators		G	G												
			Digitalized voice generators		G													
			Video Display Unit (VDU)		G	G												
			LCD Annunciator		G	G												
			Manual Stations		G	G												
			Smoke Detectors		G	G												
			Duct Smoke Detectors		G													
			Heat Detectors		G													

SUBMITTAL REGISTER

CONTRACT NO. W912QR26BA021_Specs_Vol1-0000

TITLE AND LOCATION
DSCC DLA REPAIR BUILDING 27 - Columbus, OH P2# 519087

CONTRACTOR

ACTIVITY NO	TRANSMITTAL NO	SPEC SECT	DESCRIPTION ITEM SUBMITTED	PARAG # RAPH	CLASSIFICATION	GOVT OR A/E REVWR	CONTRACTOR: SCHEDULE DATES			CONTRACTOR ACTION			APPROVING AUTHORITY					REMARKS
							SUBMIT	APPROVAL NEEDED BY	MATERIAL NEEDED BY	ACTION CODE	DATE OF ACTION	DATE FWD TO APPR AUTH/ DATE RCD FROM CONTR	DATE FWD TO OTHER REVIEWER	DATE RCD FROM OTH REVIEWER	ACTION CODE	DATE OF ACTION	MAILED TO CONTR/ DATE RCD FRM APPR AUTH	
(a)	(b)	(c)	(d)	(e)	(f)		(g)	(h)	(i)	(j)	(k)	(l)	(m)	(n)	(o)	(p)	(q)	(r)
		28 31 76	Addressable Interface Devices	2.4	G	G												
			Addressable Control Modules	2.5	G	G												
			Isolation Modules		G	G												
			Notification Appliances	1.9.1.6	G	G												
			Textual Display Sign Control		G	G												
			Panel															
			Textual Display Signs	2.6.3	G	G												
			Batteries	2.8.1	G	G												
			Battery Chargers	2.8.2	G	G												
			Surge Protective Devices	2.9	G	G												
			Alarm Wiring	2.9	G													
			Back Boxes and Conduit	3.3.4	G	G												
			Terminal Cabinets	3.3.2	G	G												
			Digital Alarm Communicator		G													
			Transmitter (DACT)															
			Electromagnetic Door Holders		G	G												
			Environmental Enclosures or		G													
			Guards															
			Document Storage Cabinet	3.12.3	G	G												
			SD-06 Test Reports															
			Test Procedures	3.8.1	G	G												
			SD-07 Certificates															
			Verification of Compliant	3.8.2.1	G	G												
			Installation															
			Request for Government Final	3.8.2.2	G	G												
			Test															

SUBMITTAL REGISTER

CONTRACT NO. W912QR26BA021_Specs_Vol1-0000

TITLE AND LOCATION
DSCC DLA REPAIR BUILDING 27 - Columbus, OH P2# 519087

CONTRACTOR

ACTIVITY NO	TRANSMITTAL NO	SPEC SECT	DESCRIPTION ITEM SUBMITTED	PARAG # RAPH	CLASSIFICATION	GOVT OR A/E REVWR	CONTRACTOR: SCHEDULE DATES			CONTRACTOR ACTION			APPROVING AUTHORITY					MAILED TO CONTR/ DATE RCD FRM APPR AUTH	REMARKS
							SUBMIT	APPROVAL NEEDED BY	MATERIAL NEEDED BY	ACTION CODE	DATE OF ACTION	DATE FWD TO APPR AUTH/ DATE RCD FROM CONTR	DATE FWD TO OTHER REVIEWER	DATE RCD FROM OTH REVIEWER	ACTION CODE	DATE OF ACTION		
(a)	(b)	(c)	(d)	(e)	(f)		(g)	(h)	(i)	(j)	(k)	(l)	(m)	(n)	(o)	(p)		(q)	(r)
		28 31 76	SD-10 Operation and Maintenance																
			Data																
			Operation and Maintenance	3.10	G	G													
			(O&M) Instructions																
			Instruction of Government	3.11	G	G													
			Employees																
			SD-11 Closeout Submittals																
			As-Built Drawings	1.9.1.13															
			Spare Parts	1.11.1															
		33 71 01	SD-03 Product Data																
			Conductors																
			Insulators	2.5															
			Nameplates	2.24															
			Pole Top Switch	3.1.4															
			Cutouts																
			SD-06 Test Reports																
			Field Quality Control	3.6															
			Ground Resistance Test Reports	1.5.3															
			Medium-Voltage Preassembled	3.6.3															
			Cable Test																
			Low-Voltage Cable Test	3.6.5															
			Acceptance Checks and Tests	3.6.7															
			SD-09 Manufacturer’s Field																
			Reports																
			Operation and Maintenance	1.6															
			Manuals																

SUBMITTAL REGISTER

CONTRACT NO. W912QR26BA021_Specs_Vol1-0000

TITLE AND LOCATION
DSCC DLA REPAIR BUILDING 27 - Columbus, OH P2# 519087

CONTRACTOR

ACTIVITY NO	TRANSMITTAL NO	SPEC SECT	DESCRIPTION ITEM SUBMITTED	PARAGRAPH #	CLASSIFICATION	GOVT OR A/E REVWR	CONTRACTOR: SCHEDULE DATES			CONTRACTOR ACTION			APPROVING AUTHORITY					REMARKS
							SUBMIT	APPROVAL NEEDED BY	MATERIAL NEEDED BY	ACTION CODE	DATE OF ACTION	DATE FWD TO APPR AUTH/ DATE RCD FROM CONTR	DATE FWD TO OTHER REVIEWER	DATE RCD FROM OTH REVIEWER	ACTION CODE	DATE OF ACTION	MAILED TO CONTR/ DATE RCD FRM APPR AUTH	
(a)	(b)	(c)	(d)	(e)	(f)		(g)	(h)	(i)	(j)	(k)	(l)	(m)	(n)	(o)	(p)	(q)	(r)
		33 71 01	Operation and Maintenance	1.6.1														
			Manuals															
			SD-10 Operation and Maintenance															
			Data															
			Operation and Maintenance	1.6														
			Manuals															
			Operation and Maintenance	1.6.1														
			Manuals															

P2# 519087 - DSSC DLA Repair Building 27
Columbus, OH

SECTION 01 11 00

SUMMARY OF WORK
02/24

PART 1 GENERAL

1.1 SUBMITTALS

Government approval is required for submittals with a "G" or "S" classification. Submittals not having a "G" or "S" classification are for information only. When used, a code following the "G" classification identifies the office that will review the submittal for the Government. Submit the following in accordance with Section 01 33 00 SUBMITTAL PROCEDURES:

SD-01 Preconstruction Submittals

Sequencing And Scheduling Plan; G

1.2 WORK COVERED BY CONTRACT DOCUMENTS

1.2.1 Project Description

The work includes improvements to the building envelope through the installation of an Exterior Insulation and Finish System (EIFS) on the fitness center’s exterior walls. This enhancement is necessary to increase thermal performance and reduce heating and cooling loads. In support of this effort, all exterior doors and windows exhibiting signs of failure or degradation are to be replaced or repaired.

A new vestibule will be constructed at the main entrance to the fitness center. This element is required to reduce air infiltration and support climate control within the facility. Interior building modifications are also prescribed to meet the FY22 DoD MWR Fitness Facility Standards. These modifications include the reconfiguration of walls, doors, finishes, and floor layouts to facilitate proper separation of functions, maximize line-of-sight, and improve circulation throughout the facility.

Updates to the fire protection and fire alarm systems are required to address changes in the interior layout. These system modifications must comply with UFC 3-600-01 to ensure code-compliant life safety coverage in all newly programmed areas. In parallel, all fluorescent lighting fixtures throughout the fitness portion of the facility are to be upgraded to high-efficiency LED fixtures.

The heating, ventilation, and air conditioning (HVAC) systems are required to be upgraded to meet UFC 4-740-02, UFC 3-410-01, and ASHRAE 62.1 standards for indoor air quality and environmental control. The design must provide approximately 200 tons of cooling capacity. New Direct Digital Controls (DDC) must be installed to provide centralized and programmable control over HVAC and lighting systems.

Electrical system enhancements are necessary to accommodate the increased demand imposed by upgraded HVAC and lighting loads. Specifically, the project requires replacement of existing pad-mounted transformers with new units properly sized to meet anticipated building electrification requirements. The design and construction for the replacement transformers

are included in the scope of work.

Domestic hot water systems powered by natural gas are to be replaced (the facility will continue with gas water heaters). Electrification of the hot water plant has been removed from the scope. Testing for hazardous materials such as asbestos and lead is required. Should any hazardous materials be identified, abatement must be carried out in accordance with NESHAP and applicable Ohio EPA standards.

Demolition of existing systems and infrastructure is included in the scope. This includes removal of air handling units (AHUs), the existing chiller and condensing units, domestic water heaters, water piping, doors, windows, interior partitions, floor finishes, and ceiling systems.

Interior spatial layout changes must meet DoD MWR standards by providing clear delineation between operational, maintenance, and physical activity spaces. These layout updates must enable efficient and safe circulation, maximize visibility, and improve usability across all zones of the facility.

All fire protection measures associated with these layout changes must be reviewed and validated for compliance with UFC 3-600-01. Likewise, the HVAC system design is required to incorporate sufficient air circulation and outside air intake to maintain safe and comfortable conditions year-round. The building control systems—including those used to operate HVAC and lighting—are to be designed in compliance with UFC 3-410-02 and UFC 4-010-06 cybersecurity requirements; and incidental related work.

1.2.2 Location

The work is located at the DLA DSSC Fitness Center in building 27, approximately as indicated. The exact location will be shown by the Contracting Officer.

1.3 OCCUPANCY OF PREMISES

Building(s) will be occupied during performance of work under this Contract. Occupancy notifications will be posted in a prominent location in the work area.

Before work is started, arrange with the Contracting Officer a sequence of procedure, means of access, space for storage of materials and equipment, and use of approaches, corridors, and stairways.

Provide a final sequencing and scheduling plan prior to any work being performed on site.

A 30-day notification is required to be provided to the Contracting Officer for any outages for this project. The outage will be good for 14 days in order to complete the required work/tasks.

1.4 EXISTING WORK

Remove or alter existing work in such a manner as to prevent injury or damage to any portions of the existing work which remain.

Repair or replace portions of existing work which have been altered during construction operations to match existing or adjoining work, as approved by the Contracting Officer. At the completion of operations, existing

work must be in a condition equal to or better than that which existed before new work started.

1.5 NOT USED

1.5.1 NOT USED

PART 2 PRODUCTS

Not used.

PART 3 EXECUTION

Not used.

-- End of Section --

SECTION 01 32 01.00 06

PROJECT SCHEDULE
10/23

PART 1 GENERAL

1.1 REFERENCES

The publications listed below form a part of this specification to the extent referenced. The publications are referred to within the text by the basic designation only.

AACE INTERNATIONAL (AACE)

AACE 29R-03	(2011) Forensic Schedule Analysis
AACE 52R-06	(2006) Time Impact Analysis - As Applied in Construction
AACE 84R-13	(2015) Planning and Accounting for Adverse Weather

AMERICAN SOCIETY OF CIVIL ENGINEERS (ASCE)

ASCE 67-17	(2017) Schedule Delay Analysis

U.S. ARMY CORPS OF ENGINEERS (USACE)

ER 1-1-11	(2017) Administration -- Project Schedules

1.2 SUBMITTALS

Government approval is required for submittals with a "G" classification. When used, a code following the "G" classification identifies the office that will review the submittal for the Government. Submit the following in accordance with Section 01 33 00 SUBMITTAL PROCEDURES:

SD-01 Preconstruction Submittals

Project Scheduler Qualifications; G

Preliminary Project Schedule; G

Initial Project Schedule; G

Periodic Schedule Update; G

1.3 PROJECT SCHEDULER QUALIFICATIONS

Designate an authorized representative to be responsible for the preparation of the schedule and all required updating and production of reports. The Designated Project Scheduler must have prepared and maintained at least three previous construction schedules for projects of similar size and complexity to this contract, using Primavera P6.. Representative must have a comprehensive knowledge of CPM scheduling principles and application.

PART 2 PRODUCTS

2.1 SOFTWARE

The scheduling software utilized to produce and update the schedules required herein must be capable of meeting all requirements of this specification.

2.1.1 Government Default Software

The Government uses Primavera P6. Ensure exported schedule files are compatible with the CURRENT version of P6 used by the Government.

2.1.2 Contractor Software

Scheduling software used by the contractor must be commercially available from the software vendor for purchase with vendor software support agreements available. The software routine used to create the required sdef file must be created and supported by the software manufacturer.

2.1.2.1 Primavera

If Primavera P6 is selected for use, provide the "xer" export file in a version of P6 importable by the Government system. Verify at the SEKO meeting which version of P6 is in use by the Government. Export the schedule in a version of P6 no newer than that used by the Government.

2.1.2.2 Other Than Primavera

If the Contractor chooses software other than Primavera P6, that is compliant with this specification, provide for the Government's use two licenses, two computers, and training for two Government employees in the use of the software. These computers will be stand-alone and not connected to Government network. Computers and licenses will be returned at project completion.

PART 3 EXECUTION

3.1 GENERAL REQUIREMENTS

Prepare for approval a Project Schedule, as specified herein, pursuant to FAR Clause 52.236-15 Schedules for Construction Contracts. Show in the schedule the proposed sequence to perform the work and dates contemplated for starting and completing all schedule activities. The scheduling of the entire project is required. The scheduling of construction is the responsibility of the Contractor. Contractor management personnel must actively participate in its development. Subcontractors, and suppliers working on the project must also contribute to developing and maintaining an accurate Project Schedule. Provide a schedule that is a forward planning as well as a project monitoring tool. Use the Critical Path Method (CPM) of network calculation to generate all Project Schedules. Prepare each Project Schedule using the Precedence Diagram Method (PDM).

3.1.1 Scheduling Expectations Kickoff Meeting(SEKO)

In conjunction with the post award conference or pre construction conference the Government and the Contractor will hold a separate and distinct Scheduling Expectations Kickoff Meeting(SEKO). The intent of

this meeting is for the Government to review with the contractor the requirements of the scheduling specification, communicate the Government's expectations regarding schedule development and management, and answer any questions the Contractor may have regarding the schedule requirements.

3.2 BASIS FOR PAYMENT AND COST LOADING

The schedule is the basis for determining contract earnings during each update period and therefore the amount of each progress payment. The aggregate value of all activities coded to a contract CLIN must equal the value of the CLIN. Match the progress payment "Pay Period Thru" date in RMS to the schedule data date.

3.2.1 Activity Cost Loading

a. Activity cost loading must be reasonable and without front-end loading. Activities with a negative cost loading is not allowed. Provide additional documentation to demonstrate reasonableness if requested by the Contracting Officer.

b. Coordinate with the Contracting Officer to request approval for, and assign costs, to the respective procurement activity for which payment will be requested for materials/equipment in advance of installation. Any such payment request for approved material/equipment advanced payment shall be supported by a paid invoice or as determined by the Contracting Officer.

3.2.2 Withholdings / Payment Rejection

Failure to meet the requirements of this specification may result in the disapproval of the preliminary, initial, or periodic schedule updates and subsequent rejection of payment requests until compliance is met.

In the event that the Contracting Officer directs schedule revisions and those revisions have not been included in subsequent Project Schedule revisions or updates, the Contracting Officer may withhold 10 percent of pay request amount from each payment period until such revisions to the project schedule have been made.

3.3 PROJECT SCHEDULE DETAILED REQUIREMENTS

3.3.1 Level of Detail Required

Develop the Project Schedule to the appropriate level of detail to address major milestones and to allow for satisfactory project planning and execution. Failure to develop the Project Schedule to an appropriate level of detail will result in its disapproval. The Contracting Officer will consider, but is not limited to, the following characteristics and requirements to determine appropriate level of detail:

3.3.2 Activity Durations

Reasonable activity durations are those that allow the progress of ongoing activities to be accurately determined between update periods. Non-procurement activities Original Durations (OD) are not to exceed 20 workdays or 30 calendar days.

3.3.3 Procurement Activities

Include in the schedule activities associated with the critical submittals and their approvals, procurement, fabrication, and delivery of long lead materials, equipment, fabricated assemblies, and supplies. Long lead procurement activities are those with an anticipated procurement sequence of over 90 calendar days.

3.3.4 Mandatory Activities

Include the following activities in the initial project schedule and all updates.

a. Submission, review and acceptance of SD-01 Preconstruction Submittals (individual activity for each).

b.

c. Submission of mechanical/electrical/information systems layout drawings.

d. Submission and approval of O & M manuals.

e. Submission and approval of as-built drawings.

f. Submission and approval of DD1354 data and installed equipment lists.

g. Submission and approval of testing and air balance (TAB).

h. Submission of TAB specialist design review report.

i. Submission and approval of fire protection specialist.

j. Submission and approval of Building Commissioning Plan, Controls testing plan, test data, and reports: Develop the schedule logic associated with testing and commissioning of mechanical systems to a level of detail consistent with the contract commissioning requirements. All tasks associated with building testing and commissioning will be completed prior to submission of building commissioning report and subsequent contract completion.

   These activities may include but are not limited to: air and water balancing, building commissioning - functional performance testing, controls testing, and performance verification testing. Include other systems testing, if required. Include additional commissioning requirements noted elsewhere in the Contract as required in the schedule and discuss during the SEKO meeting, noted in paragraph SCHEDULING EXPECTATIONS KICKOFF MEETING (SEKO).

k. Contractor's pre-final inspection.

l. Correction of punch list from Contractor's pre-final inspection.

m. Government's pre-final inspection.

n. Correction of punch list from Government's pre-final inspection.

o. Final inspection.

3.3.5 Government Activities

Show in schedule, Government and other agency activities that could impact progress. These activities include, but are not limited to approvals,acceptance, environmental permit approvals by State regulators, inspections, utility tie-in, Government Furnished Equipment (GFE) and Notice to Proceed (NTP) for phasing requirements.

3.3.6 Standard Activity Coding Dictionary

Use the activity coding structure defined in the Standard Data Exchange Format (SDEF) in ER 1-1-11. This exact structure is mandatory. Develop and assign all Activity Codes to activities as detailed herein.

The SDEF format is as follows:

Field	Activity Code	Length	Description
1	WRKP	3	Workers per day
2	RESP	4	Responsible party
3	AREA	4	Area of work
4	MODF	6	Modification Number
5	BIDI	6	Bid Item (CLIN)
6	PHAS	2	Phase of work
7	CATW	1	Category of work
8	FOW	20	Feature of work*

*Some systems require that FEATURE OF WORK values be placed in several activity code fields. The notation shown is for Primavera P6. Refer to the specific software guidelines with respect to the FEATURE OF WORK field requirements.

3.3.6.1 Workers Per Day (WRKP)

Assign Workers per Day for all field construction or direct work activities, if directed by the Contracting Officer. Workers per day is based on the average number of workers expected each day to perform a task for the duration of that activity.

3.3.6.2 Responsible Party Coding (RESP)

Assign responsibility code for all activities to the Prime Contractor, Subcontractor(s) or Government agency(ies) responsible for performing the activity.

a. Activities coded with a Government Responsibility code include, but are not limited to: Government approvals, Government design reviews, environmental permit approvals by State regulators, Government

Furnished Property/Equipment (GFP) and Notice to Proceed (NTP) for phasing requirements.

b. Activities cannot have more than one Responsibility Code. Examples of acceptable activity code values are: DOR (for the designer of record); ELEC (for the electrical subcontractor); MECH (for the mechanical subcontractor); and GOVT (for USACE).

3.3.6.3 Area of Work Coding (AREA)

Assign Work Area code to activities based upon the work area in which the activity occurs. Define work areas based on resource constraints or space constraints that would preclude a resource, such as a particular trade or craft work crew from working in more than one work area at a time due to restraints on resources or space. Examples of Work Area Coding include different areas within a floor of a building, different floors within a building, and different buildings within a complex of buildings. Activities cannot have more than one Work Area Code.

3.3.6.4 Modification Number (MODF)

Assign a Modification Number Code to any activity or sequence of activities added to the schedule as a result of a Contract Modification, when approved by Contracting Officer. Key all Code values to the Government's modification numbering system. An activity can have only one Modification Number Code.

3.3.6.5 Bid Item Coding (BIDI)

Assign a Bid Item Code to all activities using the Contract Line Item Number (CLIN) to which the activity belongs, even when an activity is not cost loaded. An activity can have only one BIDI Code.

3.3.6.6 Phase of Work Coding (PHAS)

Assign Phase of Work Code to all activities. Examples of phase of work are procurement phase and construction phase. Each activity can have only one Phase of Work code.

b. If the contract specifies phasing with separately defined performance periods, identify a Phase Code to allow filtering and organizing the schedule accordingly.

3.3.6.7 Category of Work Coding (CATW)

Assign a Category of Work Code to all activities. Category of Work Codes include, but are not limited to permits, construction submittal, procurement, fabrication, weather sensitive installation, non-weather sensitive installation, start-up, and testing activities. Each activity can have no more than one Category of Work Code.

3.3.6.8 Feature of Work Coding (FOW)

Assign a Feature of Work Code to appropriate activities based on the Definable Feature of Work to which the activity belongs based on the approved QC plan.

Definable Feature of Work is defined in Section 01 45 04.10 06 CONTRACTOR QUALITY CONTROL. An activity can have only one Feature of Work Code.

3.3.7 Contract Milestones and Constraints

Milestone activities are to be used for significant project events including, but not limited to, project phasing, project start and end activities, or interim completion dates. The use of artificial float constraints such as "zero free float" or "zero total float" are prohibited.

Mandatory constraints that ignore or effect network logic are prohibited. No constrained dates are allowed in the schedule other than those specified herein. Submit additional constraints to the Contracting Officer for approval on a case by case basis.

3.3.7.1 Project Start Date Milestone and Constraint

The first activity in the project schedule must be a start milestone titled "NTP Acknowledged," which must have a "Start On" constraint date equal to the date that the NTP is acknowledged.

3.3.7.2 End Project Finish Milestone and Constraint

The last activity in the schedule must be a finish milestone titled "End Project."

Constrain the project schedule to the Contract Completion Date in such a way that if the schedule calculates an early finish, then the float calculation for "End Project" milestone reflects positive float on the longest path. If the project schedule calculates a late finish, then the "End Project" milestone float calculation reflects negative float on the longest path.

3.3.7.3 Interim Completion Dates and Constraints

Constrain contractually specified interim completion dates to show negative float when the calculated late finish date of the last activity in that phase is later than the specified interim completion date.

3.3.7.3.1 Start Phase

Use a start milestone as the first activity for a project phase. Call the start milestone "Start Phase X" where "X" refers to the phase of work.

3.3.7.3.2 End Phase

Use a finish milestone as the last activity for a project phase. Call the finish milestone "End Phase X" where "X" refers to the phase of work.

3.3.8 Adverse Weather

Ensure anticipated adverse weather is accounted for in the Project Schedule. AACE 84R-13 provides methodologies for techniques in planning for adverse weather. The REQUIRED methodology is the use of a weather calendar.

3.3.9 Calendars

Schedule activities on a Calendar to which the activity logically

belongs. Develop calendars to accommodate any contract defined work period such as a 7-day calendar for Government Acceptance activities, concrete cure times, etc. Develop the default Calendar to match the physical work plan with non-work periods identified including weekends and holidays. Develop Seasonal Calendar(s) and assign to seasonally affected activities as applicable.

3.3.10 Open Ended Logic

Only two open ended activities are allowed: the first activity "NTP Acknowledged" is to have no predecessor logic, and the last activity -"End Project" is to have no successor logic. Except as noted above all activities are to have at least a start-to-start or finish-to-start relationship with its predecessor(s) and a finish-to-finish or finish-to-start relationship with its successor(s).

Predecessor open ended logic may be allowed in a time impact analyses upon the Contracting Officer's approval.

3.3.11 Default Progress Data Disallowed

Actual Start and Finish dates must not automatically update with default mechanisms included in the scheduling software. Updating of the percent complete and the remaining duration of any activity must be independent functions. Disable program features that calculate one of these parameters from the other. Activity Actual Start (AS) and Actual Finish (AF) dates assigned during the updating process must match those dates provided in the Contractor Quality Control Reports. Failure to document the AS and AF dates in the Daily Quality Control report will result in disapproval of the Contractor's schedule.

3.3.12 Out-of-Sequence Progress

Activities that have progressed before all preceding logic has been satisfied (Out-of-Sequence Progress) will be allowed only on a case-by-case basis subject to approval by the Contracting Officer. Propose logic corrections to eliminate out of sequence progress or justify not changing the sequencing for approval prior to submitting an updated project schedule. Address out of sequence progress or logic changes in the Narrative Report and in the periodic schedule update meetings.

3.3.13 Added and Deleted Activities

Do not delete activities from the project schedule or add new activities to the schedule without approval from the Contracting Officer. Activity ID and description changes are considered new activities and cannot be changed without Contracting Officer approval.

3.3.14 Original Durations

Activity Original Durations (OD) must be reasonable to perform the work item. OD changes are prohibited unless justification is provided and approved by the Contracting Officer.

3.3.15 Leads, Lags, and Start to Finish Relationships

Lags must be reasonable as determined by the Government and not used in place of realistic original durations, must not be in place to artificially absorb or create float, or to replace proper schedule logic.

a. Leads (negative lags) are prohibited.

b. Start to Finish (SF) relationships are prohibited.

3.3.16 Retained Logic

Schedule calculations must retain the logic between predecessors and successors ("retained logic" mode) even when the successor activity(s) starts and the predecessor activity(s) has not finished (out-of-sequence progress). Software features that in effect sever the tie between predecessor and successor activities when the successor has started and the predecessor logic is not satisfied ("progress override") are not be allowed.

3.3.17 Percent Complete

Update the percent complete for each activity started, based on the realistic assessment of earned value. Activities which are complete but for remaining minor punch list work and which do not restrain the initiation of successor activities may be declared 100 percent complete to allow for proper schedule management. Budgeted cost of activity is to be reduced by the amount needed to correct deficiency. The activity referenced in paragraph COST LOADING of CLOSEOUT ACTIVITIES must have its budgeted cost increased by this amount.

3.3.18 Remaining Duration

Update the remaining duration for each activity based on the number of estimated workdays it will take to complete the activity. Remaining duration may not mathematically correlate with percentage found under paragraph entitled Percent Complete. The remaining duration for unstarted activities are not to be less than its orginal duration.

3.3.19 Cost Loading of Closeout Activities

Cost load the "Correction of punch list from Government pre-final inspection" activity(ies) not less than 1 percent of the present contract value. Activity(ies) may be declared 100 percent complete upon the Government's verification of completion and correction of all punch list work identified during Government pre-final inspection(s).

3.3.19.1 As-Built Drawings

Refer to LRL Section 00 80 00.00 06 regarding AS-BUILT DOCUMENTS for D/B or D/B/B contracts for a determination of withholding for final as-built drawing submittals.

3.3.19.2 O & M Manuals

Refer to LRL Section 00 80 00.00 06 regarding EQUIPMENT DATA, O&M & REPAIR MANUALS WITH FIELD TRAINING REQUIREMENTS for a determination of withholding for final acceptance/approval of O&M Manuals.

3.3.20 Early Completion Schedule and the Right to Finish Early

An Early Completion Schedule is an Initial Project Schedule (IPS) that indicates all scope of the required contract work will be completed before the contractually required completion date.

a. No IPS indicating an Early Completion will be accepted without being fully resource-loaded (including crew sizes and manhours) and the Government agreeing that the schedule is reasonable and achievable.

b. The Government is under no obligation to accelerate work items it is responsible for to ensure that the early completion is met nor is it responsible to modify incremental funding (if applicable) for the project to meet the contractor's accelerated work.

3.4 PROJECT SCHEDULE SUBMISSIONS

a. Provide the submissions as described below. The data reports and network diagrams required for each submission are contained in paragraph SUBMISSION REQUIREMENTS. If the Contractor fails or refuses to furnish the information and schedule updates as set forth herein, the Contractor will be deemed not to have provided an estimate upon which a progress payment can be made.

b. Review comments made by the Government on the schedule(s) do not relieve the Contractor from compliance with requirements of the Contract Documents.

3.4.1 Preliminary Project Schedule Submission

Within 15 calendar days after the NTP is acknowledged, submit the Preliminary Project Schedule defining the planned operations detailed for the first 90 calendar days for approval. The approved Preliminary Project Schedule will be used for payment purposes not to exceed 90 calendar days after NTP. Completely cost load the Preliminary Project Schedule to balance the contract award CLINS shown on the Price Schedule. The Preliminary Project Schedule may be summary in nature for the remaining performance period. It must be early start and late finish constrained and logically tied as specified. The Preliminary Project Schedule forms the basis for the Initial Project Schedule specified herein and must include all of the required plan and program preparations, submissions and approvals identified in the contract (for example, Quality Control Plan, Safety Plan, and Environmental Protection Plan) as well as design activities, planned submissions of all early design packages, permitting activities, design review conference activities, and other non-construction activities intended to occur within the first 90 calendar days. Government acceptance of the associated design package(s) and all other specified Program and Plan approvals must occur prior to any planned construction activities. Activity code any activities that are summary in nature after the first 90 calendar days with Bid Item (CLIN) code (BIDI), Responsibility Code (RESP) and Feature of Work code (FOW).

3.4.2 Initial Project Schedule Submission

Submit the Initial Project Schedule for approval within 42 calendar days after notice to proceed is issued. The schedule must demonstrate a reasonable and realistic sequence of activities which represent all work through the entire contract performance period. No payment will be made for work items not fully detailed in the Project Schedule.

3.4.3 Periodic Schedule Updates

Update the Project Schedule on a regular basis, monthly at a minimum. Provide a draft Periodic Schedule Update for review at the schedule update

meetings as prescribed in the paragraph PERIODIC SCHEDULE UPDATE MEETINGS. These updates will enable the Government to assess Contractor's progress.

a. Update information including Actual Start Dates (AS), Actual Finish Dates (AF), Remaining Durations (RD), and Percent Complete. Updated information is subject to the approval of the Government at the meeting.

b. AS and AF dates must match the date(s) reported on the Contractor's Quality Control Report for an activity start or finish.

3.5 SUBMISSION REQUIREMENTS

Submit the following items for the Preliminary Schedule, Initial Schedule, and every Periodic Schedule Update throughout the life of the project:

3.5.1 Electronic Scheduling Data

Provide electronic scheduling data containing the current project schedule and all previously submitted schedules in the format of the scheduling software (e.g. .xer). Also include the Narrative Report and all required Schedule Reports. The electronic file is to identify the type of schedule (Preliminary, Initial, Update), full contract number, Data Date and schedule file name. Each schedule must have a unique file name and use project specific settings. The file naming convention is to be determined at SEKO meeting.

3.5.2 Narrative Report

Provide a Narrative Report with each schedule submission. The Schedule Narrative Report is a "stand alone" report in PDF or Word format. Title the report "Schedule Narrative Report". Show the Report date, schedule name, and contract number on the first page. Indicate who is responsible for the schedule update and narrative report. Provide a brief description of the Project Scope. The Narrative Report is expected to communicate to the Government the thorough analysis of the schedule output and the plans to compensate for problems, either current or potential, which are revealed through that analysis. Include the following information at a minimum in the Narrative Report:

a. Identify and discuss the work scheduled to start in the next update period.

b. Identify and describe Progress and Non-Progress updates made to the schedule.

- Progress Only updates are considered to be: Actual Start (AS), Actual Finish (AF), Reduced Remaining Duration (RD) changes, and Increased Percent Complete.

- Non-Progress updates are considered to be: Addition or Deletion of Activities; Split or combined activities using new activity IDs; Addition or deletion of logic links; Changes to lag values of logic links; Addition, Deletion, or Changes to constraints; Changes to OD; Increases in RD such that RD becomes greater than OD; Changes to RD not accompanied by changes to Percent Complete; Increase in RD of activities that have not started; Changes to calendar assignments; Changes to holiday assignments within a

pre-existing calendar.

c. Describe activities along the critical path in addition to activities on the next float path after the critical path.

d. Describe current and anticipated problem areas, delaying factors and their impact, and an explanation of corrective actions taken or required to be taken. Identify the party responsible for delay, if applicable.

e. Identify and explain why activities, based on their calculated late dates, should have either started or finished during the update period but did not.

f. Identify and discuss all schedule changes by activity ID and activity name including what specifically was changed and why the change was needed. Include at a minimum new and deleted activities, logic changes, duration changes, calendar changes, lag changes, resource changes, and actual start and finish date changes.

g. Identify and explain why out-of-sequence work was performed and how the schedule was corrected to show as-built condition of out-of-sequence work.

h. If the longest path changes from a monthly update to the next, provide an explanation of the factors driving the change.

i. Respond to USACE Schedule Review Comments from the previous update(s).

3.5.3 Schedule Reports

The format, filtering, organizing, and sorting for each schedule report will be as directed by the Contracting Officer. Typically, reports contain Activity Numbers, Activity Description, Original Duration, Remaining Duration, Early Start Date, Early Finish Date, Late Start Date, Late Finish Date, Total Float, Actual Start Date, Actual Finish Date, and Percent Complete. Provide the reports electronically in .pdf format. The following lists typical reports that will be requested:

3.5.3.1 Activity Report

List of all activities sorted according to activity number.

3.5.3.2 Logic Report

List of detailed predecessor and successor activities for every activity in ascending order by activity number.

3.5.3.3 Total Float Report

A list of all incomplete activities sorted in ascending order of total float. List activities which have the same amount of total float in ascending order of Early Start Dates. Do not show completed activities on this report.

3.5.3.4 Earnings Report by CLIN

A compilation of the Total Earnings on the project from the NTP to the data date, which reflects the earnings of activities based on the

agreements made in the schedule update meeting defined herein. Provided a complete schedule update has been furnished, this report serves as the basis of determining progress payments. Group activities by CLIN number and sort by activity number. Provide a total CLIN percent earned value, CLIN percent complete, and project percent complete. The printed report must contain the following for each activity: the Activity Number, Activity Description, Original Budgeted Amount, Earnings to Date, Earnings this period, Total Quantity, Quantity to Date, and Percent Complete (based on cost).

3.5.3.5 Scheduling and Leveling Report

Provide a Scheduling/Leveling Report generated from the current project schedule being submitted.

3.5.3.6 Three Week Look Ahead & Detail Schedule

a. Prepare and issue a 3-week Look Ahead schedule for each weekly meeting using a 3-week look-ahead filter to show all activities including critical activities, planned start, finish, and total float.

b. In addition, provide a more detailed day-to-day plan of upcoming work derived, but maintained separately, from the project schedule. The detailed plan is typically created and maintained by the Project Superintendent. The detailed plan information shall correspond with the Activity Numbers and Activity Description of the monthly schedule updates. It shall be attached to the corresponding QC Daily Report each week. The detailed plan activities must not exceed 5 working days in duration.

c. The activities shall include a sufficient level of detail to show upcoming outages, closures, testing, preparatory & initial meetings, prime and subcontractor crew assignments (including the name of the subcontractors and/or suppliers as necessary), anticipated crew size, material & equipment as necessary, and specific areas where work is to take place (e.g - POV parking; Ductbank between X & Y; Mech Room ###; 1st floor lobby, Area A Roof, Critical Lifts, etc.)

3.5.4 Network Diagram

The Network Diagram is required for the Preliminary, Initial and Periodic Updates. Depict and display the order and interdependence of activities and the sequence in which the work is to be accomplished. The Contracting Officer will use, but is not limited to, the following conditions to review compliance with this paragraph:

3.5.4.1 Continuous Flow

Show a continuous flow from left to right with no arrows from right to left. Show the activity number, description, duration, and estimated earned value on the diagram.

3.5.4.2 Project Milestone Dates

Show dates on the diagram for start of project, any contract required interim completion dates, and contract completion dates.

3.5.4.3 Critical Path

Show all activities on the critical path. The critical path is defined as the longest path.

3.5.4.4 Grouping and Sorting

Group and sort activities as directed to assist in the understanding of the activity sequence. Typically, this flow will group activities by major elements of work, category of work, work area and/or responsibility.

3.5.4.5 Cash Flow / Schedule Variance Control (SVC) Diagram

With each schedule submission, provide a SVC diagram showing 1) Cash Flow S-Curves indicating planned project cost based on projected early and late activity finish dates, and 2) Earned Value to-date.

3.6 PERIODIC SCHEDULE UPDATE

3.6.1 Periodic Schedule Update Meetings

Conduct periodic schedule update meetings for the purpose of reviewing the proposed Periodic Schedule Update, Narrative Report, Schedule Reports, and progress payment. Conduct meetings at least monthly within five days of the proposed schedule data date. Provide a computer with the scheduling software loaded and a projector which allows all meeting participants to view the proposed schedule during the meeting. The Contractor's authorized scheduler must organize, group, sort, filter, perform schedule revisions as needed and review functions as requested by the Contractor and/or Government. The Contractor scheduler must attend in person unless virtual attendance is approved by Contracting Officer. The meeting is a working interactive exchange which allows the Government and Contractor the opportunity to review the updated schedule on a real time and interactive basis. The meeting will last no longer than 8 hours. Submit schedule file and narrative to the Government a minimum of two workdays in advance of the meeting. The Contractor's Project Manager must attend the meeting with the authorized representative of the Contracting Officer. Superintendents, foremen and major subcontractors must attend the meeting as required to discuss the project schedule and work. Following the schedule update meeting, make corrections to the schedule and resubmit, following the required schedule naming convention. Include only those changes approved by the Government in the schedule review meeting. Only approved schedules may be used to generate invoices for payment.

3.6.2 Update Submission Following Progress Meeting

Submit the complete Periodic Schedule Update of the Project Schedule containing all approved progress, revisions, and adjustments, pursuant to paragraph SUBMISSION REQUIREMENTS not later than 4 workdays after the periodic schedule update meeting.

3.7 WEEKLY PROGRESS MEETINGS

a. The Government and the Contractor shall meet weekly (or as otherwise mutually agreed to) between the meetings described in paragraph PERIODIC SCHEDULE UPDATE MEETINGS for the purpose of jointly reviewing the actual progress of the project as compared to the as planned progress and to review planned activities for the upcoming three weeks. The then current and approved schedule update shall be used

for the purposes of this meeting and for the production and review of reports. The Contractor's Project Manager and the Authorized Representative of the Contracting Officer shall attend. The Contractor shall provide the planned activities for the next three weeks based on a Primavera filter of the current approved schedule. Any activity that has not started or finished as planned shall be listed as a QC deficiency in RMS.

b. The Contractor's Project Manager and the Authorized Representative of the Contracting Officer shall attend. The weekly progress meeting will address the status of RFI's, RFP's and Submittals. At the weekly progress meeting, address the status of approved schedule progress, RFIs, RFPs and Submittals. Prior to beginning work on specific work elements of a Project, the Contractor shall confer with the COR and agree on a sequence of procedures and means of access to premises and buildings; space for storage of materials and equipment; delivery of materials; and use of approaches, use of corridors, stairways, and similar means of passage. Contractor shall provide minutes for the Weekly Progress Meeting, minutes to be attached with the QC Daily Report.

3.8 REQUESTS FOR TIME EXTENSIONS

ASCE 67-17 provides delay analysis guidelines. If there is a conflict between the contract and guidance provided in ASCE 67-17, the contract will govern. Provide justification of delay to the Contracting Officer in accordance with the contract provisions and clauses for approval, within 10 days of a delay occurring. Also prepare a time impact analysis for each Government request for proposal (RFP).

3.8.1 Justification of Delay

Provide a description of the event(s) that caused the delay and/or impact to the work. As part of the description, identify all schedule activities impacted. Show that the event that caused the delay/impact was the responsibility of the Government. Provide a time impact analysis that demonstrates the effects of the delay or impact on the project completion date, or interim completion date(s). Evaluate multiple impacts chronologically; each with its own justification of delay. With multiple impacts consider any concurrency of delay. A time extension and the schedule fragnet becomes part of the project schedule and all future schedule updates upon approval by the Contracting Officer.

3.8.2 Changes That Do Not Cause Delay

If it is determined that a change does not constitute a schedule time extension, a fragnet as described in paragraph FRAGMENTARY NETWORK, is to be created and inserted into the Project schedule.

3.8.3 Time Impact Analysis (Prospective Analysis)

Prepare a time impact analysis for approval by the Contracting Officer based on industry standard AACE 52R-06. Utilize a copy of the last approved schedule prior to the first day of the impact or delay for the time impact analysis. If Contracting Officer determines the time frame between the last approved schedule and the first day of impact is too great, prepare an interim updated schedule to perform the time impact analysis. Unless approved by the Contracting Officer, no other changes may be incorporated into the schedule being used to justify the time

impact.

a. Each TIA must be in both narrative and schedule form. The narrative must define the scope and conditions of the change; provide start and finish dates of impact; predecessor and successor activity to the impact period; responsible party; describe how it originated and how it impacts the schedule. The schedule submission must consist of three native files:

(1) Fragnet used to define the scope of the changed condition,

(2) Most recent accepted schedule update as of the time of the proposal that has been updated to show all activity progress as of the time of the impact start date.

(3) The impacted schedule that has the fragnet inserted into the updated schedule calculated to show the new projected completion date.

b. All TIAs shall include a description of mitigation considerations describing efforts undertaken to minimize or eliminate impact and/or delay. The TIAs shall determine the apportionment of the overall delay assignable to each individual delay. The associated narrative must clearly describe the findings in a chronological listing beginning with the earliest delay event.

3.8.4 Forensic Schedule Analysis (Retrospective Analysis)

Prepare an analysis for approval by the Contracting Officer based on methodologies identified in industry standard AACE 29R-03. Identify which methodology was chosen and explain why it is more appropriate than other methodologies available.

3.8.5 Fragmentary Network (Fragnet)

Prepare a proposed fragnet for time impact analysis consisting of a sequence of new activities that are proposed to be added to the project schedule to demonstrate the influence of the delay or impact to the project's contractual dates. Clearly show how the proposed fragnet is to be tied into the project schedule including all predecessors and successors to the fragnet activities. The proposed fragnet must be approved by the Contracting Officer prior to incorporation into the project schedule.

3.8.6 Time Extension

The Contracting Officer must approve the Justification of Delay including the time impact analysis before a time extension will be granted. No time extension will be granted unless the delay consumes all available Project Float and extends the projected finish date ("End Project" milestone) beyond the Contract Completion Date. The time extension will be in calendar days.

Actual delays that are found to be caused by the Contractor's own actions, which result in a calculated schedule delay, are not a cause for an extension to the performance period, completion date, or any interim milestone date.

3.8.7 Impact to Early Completion Schedule

No extended overhead will be paid for delay prior to the original Contract Completion Date for an Early Completion IPS unless the Contractor actually performed work in accordance with that Early Completion Schedule. The Contractor must show that an early completion was achievable had it not been for the impact.

3.9 FAILURE TO ACHIEVE PROGRESS

Should the progress fall behind the approved project schedule for reasons other than those that are excusable within the terms of the contract, the Contracting Officer may require provision of a written recovery plan for approval. The plan must detail how progress will be made-up to include which activities will be accelerated by adding additional crews, longer work hours, extra workdays, etc.

3.9.1 Artificially Improving Progress

Artificially improving progress by means such as, but not limited to, revising the schedule logic, modifying, or adding constraints, shortening activity durations, or changing calendars in the project schedule is prohibited. Indicate assumptions made and the basis for any logic, constraint, duration, and calendar changes used in the creation of the recovery plan. Any additional resources, manpower, or daily and weekly work hour changes proposed in the recovery plan must be evident at the work site and documented in the daily report along with the Schedule Narrative Report.

3.9.2 Failure to Perform

Failure to perform work and maintain progress in accordance with the supplemental recovery plan may result in an interim and final unsatisfactory performance rating and may result in corrective action directed by the Contracting Officer pursuant to FAR 52.236-15 Schedules for Construction Contracts, FAR 52.249-10 Default (Fixed-Price Construction), and other contract provisions.

3.9.3 Recovery Schedule

Should the Contracting Officer find it necessary, submit a recovery schedule pursuant to FAR 52.236-15 Schedules for Construction Contracts.

3.10 OWNERSHIP OF FLOAT

a. Except for the provision given in the paragraph IMPACT TO EARLY COMPLETION SCHEDULE, float available in the schedule, at any time, belongs to the Project and is available for Contractor and Government use. This includes activity and project float. Activity float is the number of workdays that an activity can be delayed without causing a delay to the "End Project" finish milestone. Project float (if applicable) is the number of work days between the projected early finish and the "End Project" finish.

b. Use of float suppression techniques, such as: preferential sequencing (arranging critical path through activities more susceptible to Government caused delay); lag logic restraints; zero total or free float constraints, extended activity times, or imposing constraint dates other than as required by the contract, shall be cause for

rejection of the project schedule or its updates. The use of Resource Leveling (or similar software features) used for the purpose of artificially adjusting activity durations to consume float and influence the critical path is expressly prohibited.

3.11 TRANSFER OF SCHEDULE DATA INTO RESIDENT MANAGEMENT SYSTEM

Ensure schedule data is uploaded to RMS. This data is additional supporting data in a form and detail required by the Contracting Officer pursuant to FAR 52.232-5 Payments under Fixed-Price Construction Contracts. The receipt of a proper payment request pursuant to FAR 52.232-27 Prompt Payment for Construction Contracts is contingent upon the Government receiving both acceptable and approvable hard copies and matching electronic versions of the application for progress payment.

3.12 PRIMAVERA P6 MANDATORY REQUIREMENTS

Ensure Primavera P6 settings provide a schedule capable of fulfilling the requirements of the contract. The following settings are mandatory and required in all schedule submissions to the Government:

a. Activity Codes must be Project Level, not Global or EPS level.

b. Calendars must be Project Level, not Global or Resource level.

c. Activity Duration Types must be set to "Fixed Duration & Units".

d. Percent Complete Types must be set to "Physical".

e. Time Period Admin Preferences must remain the default "8.0 hr/day, 40 hr/week, 172 hr/month, 2000 hr/year". Set Calendar Work Hours/Day to 8.0 Hour days.

f. Set Schedule Option for defining Critical Activities to "Longest Path".

g. Set Schedule Option for defining progressed activities to "Retained Logic".

h. Set up cost loading using a single lump sum non-labor resource. The Price/Unit must be $1/hr, Default Units/Time must be "8h/d", and settings "Auto Compute Actuals" and "Calculate costs from units" un-selected.

i. Activity ID's must not exceed 10 characters.

j. Activity Names must have a verb-noun structure and contain the most defining and detailed description within the first 30 characters.

k. The daily ending hour for all work calendars must be the same.

-- End of Section --

P2# 519087 - DSSC DLA Repair Building 27
Columbus, OH

SECTION 01 33 00

SUBMITTAL PROCEDURES
08/18, CHG 4: 02/21

PART 1 GENERAL

1.1 SUMMARY

1.1.1 Submittal Information

The Contracting Officer may request submittals in addition to those specified when deemed necessary to adequately describe the work covered in the respective sections. Each submittal is to be complete and in sufficient detail to allow ready determination of compliance with contract requirements.

Units of weights and measures used on all submittals are to be the same as those used in the contract drawings.

1.1.2 Project Type

The Contractor's Quality Control (CQC) System Manager are to check and approve all items before submittal and stamp, sign, and date indicating action taken. Proposed deviations from the contract requirements are to be clearly identified. Include within submittals items such as: Contractor's, manufacturer's, or fabricator's drawings; descriptive literature including (but not limited to) catalog cuts, diagrams, operating charts or curves; test reports; test cylinders; samples; O&M manuals (including parts list); certifications; warranties; and other such required submittals.

1.1.3 Submission of Submittals

Schedule and provide submittals requiring Government approval before acquiring the material or equipment covered thereby. Pick up and dispose of samples not incorporated into the work in accordance with manufacturer's Safety Data Sheets (SDS) and in compliance with existing laws and regulations.

1.2 DEFINITIONS

1.2.1 Submittal Descriptions (SD)

Submittal requirements are specified in the technical sections. Examples and descriptions of submittals identified by the Submittal Description (SD) numbers and titles follow:

SD-01 Preconstruction Submittals

Submittals that are required prior to or at the start of construction (work) or the next major phase of the construction on a multiphase contract.

Preconstruction Submittals include schedules and a tabular list of locations, features, and other pertinent information regarding products, materials, equipment, or components to be used in the work.

Certificates Of Insurance

Surety Bonds

List Of Proposed Subcontractors

List Of Proposed Products

Baseline Network Analysis Schedule (NAS)

Submittal Register

Schedule Of Prices Or Earned Value Report

Accident Prevention Plan

Work Plan

Quality Control (QC) plan

Environmental Protection Plan

SD-02 Shop Drawings

Drawings, diagrams and schedules specifically prepared to illustrate some portion of the work.

Diagrams and instructions from a manufacturer or fabricator for use in producing the product and as aids to the Contractor for integrating the product or system into the project.

Drawings prepared by or for the Contractor to show how multiple systems and interdisciplinary work will be coordinated.

SD-04 Samples

Fabricated or unfabricated physical examples of materials, equipment or workmanship that illustrate functional and aesthetic characteristics of a material or product and establish standards by which the work can be judged.

Color samples from the manufacturer's standard line (or custom color samples if specified) to be used in selecting or approving colors for the project.

Field samples and mock-ups constructed on the project site establish standards ensuring work can be judged. Includes assemblies or portions of assemblies that are to be incorporated into the project and those that will be removed at conclusion of the work.

SD-05 Design Data

Design calculations, mix designs, analyses or other data pertaining to a part of work.

SD-06 Test Reports

Report signed by authorized official of testing laboratory that a

material, product or system identical to the material, product or system to be provided has been tested in accord with specified requirements. Unless specified in another section, testing must have been within three years of date of contract award for the project.

Report that includes findings of a test required to be performed on an actual portion of the work or prototype prepared for the project before shipment to job site.

Report that includes finding of a test made at the job site or on sample taken from the job site, on portion of work during or after installation.

Investigation reports

Daily logs and checklists

Final acceptance test and operational test procedure

SD-07 Certificates

Statements printed on the manufacturer's letterhead and signed by responsible officials of manufacturer of product, system or material attesting that the product, system, or material meets specification requirements. Must be dated after award of project contract and clearly name the project.

Document required of Contractor, or of a manufacturer, supplier, installer or Subcontractor through Contractor. The document purpose is to further promote the orderly progression of a portion of the work by documenting procedures, acceptability of methods, or personnel qualifications.

Confined space entry permits

Text of posted operating instructions

SD-10 Operation and Maintenance Data

Data provided by the manufacturer, or the system provider, including manufacturer's help and product line documentation, necessary to maintain and install equipment, for operating and maintenance use by facility personnel.

Data required by operating and maintenance personnel for the safe and efficient operation, maintenance and repair of the item.

Data incorporated in an operations and maintenance manual or control system.

SD-11 Closeout Submittals

Documentation to record compliance with technical or administrative requirements or to establish an administrative mechanism.

Submittals required for Guiding Principle Validation (GPV) or Third Party Certification (TPC).

Special requirements necessary to properly close out a construction

contract. For example, Record Drawings and as-built drawings. Also, submittal requirements necessary to properly close out a major phase of construction on a multi-phase contract.

1.2.2 Approving Authority

Office or designated person authorized to approve the submittal.

1.2.3 Work

As used in this section, on-site and off-site construction required by contract documents, including labor necessary to produce submittals, construction, materials, products, equipment, and systems incorporated or to be incorporated in such construction. In exception, excludes work to produce SD-01 submittals.

1.3 SUBMITTALS

Government approval is required for submittals with a "G" or "S" classification. Submittals not having a "G" or "S" classification are for information only. When used, a code following the "G" classification identifies the office that will review the submittal for the Government. Submit the following in accordance with Section 01 33 00 SUBMITTAL PROCEDURES:

SD-01 Preconstruction Submittals

Submittal Register; G

1.4 SUBMITTAL CLASSIFICATION

1.4.1 Government Approved (G)

Government approval is required for extensions of design, critical materials, variations, equipment whose compatibility with the entire system must be checked, and other items as designated by the Government.

Within the terms of the Contract Clause SPECIFICATIONS AND DRAWINGS FOR CONSTRUCTION, submittals are considered to be "shop drawings."

1.4.2 For Information Only

Submittals not requiring Government approval will be for information only. Within the terms of the Contract Clause SPECIFICATIONS AND DRAWINGS FOR CONSTRUCTION, they are not considered to be "shop drawings."

1.5 PREPARATION

1.5.1 Transmittal Form

Use the ENG Form 4025-R transmittal form for submitting both Government-approved and information-only submittals. Submit in accordance with the instructions on the reverse side of the form. These forms or similar forms are included in the RMS CM software that the Contractor is required to use for this contract. Properly complete this form by filling out all the heading blank spaces and identifying each item submitted. Exercise special care to ensure proper listing of the specification paragraph and sheet number of the contract drawings pertinent to the data submitted for each item.

1.5.2 Submittal Format

1.5.2.1 Format of SD-01 Preconstruction Submittals

When the submittal includes a document that is to be used in the project, or is to become part of the project record, other than as a submittal, do not apply the Contractor's approval stamp to the document itself, but to a separate sheet accompanying the document.

Provide data in the unit of measure used in the contract documents.

1.5.2.2 Format for SD-02 Shop Drawings

Provide shop drawings not less than 8 1/2 by 11 inches nor more than 30 by 42 inches, except for full-size patterns or templates. Prepare drawings to accurate size, with scale indicated, unless another form is required. Ensure drawings are suitable for reproduction and of a quality to produce clear, distinct lines and letters, with dark lines on a white background.

a. Include the nameplate data, size, and capacity on drawings. Also include applicable federal, military, industry, and technical society publication references.

b. Dimension drawings, except diagrams and schematic drawings. Prepare drawings demonstrating interface with other trades to scale. Use the same unit of measure for shop drawings as indicated on the contract drawings. Identify materials and products for work shown.

Present shop drawings sized 8 1/2 by 11 inches as part of the bound volume for submittals. Present larger drawings in sets. Submit an electronic copy of drawings in PDF format and native electronic format.

1.5.2.2.1 Drawing Identification

Include on each drawing the drawing title, number, date, and revision numbers and dates, in addition to information required in paragraph IDENTIFYING SUBMITTALS.

Number drawings in a logical sequence. Each drawing is to bear the number of the submittal in a uniform location next to the title block. Place the Government contract number in the margin, immediately below the title block, for each drawing.

Reserve a blank space, no smaller than 4 inches on the right-hand side of each sheet for the Government disposition stamp.

1.5.2.3 Format of SD-03 Product Data

Present product data submittals for each section as a complete, bound volume. Include a table of contents, listing the page and catalog item numbers for product data.

Indicate, by prominent notation, each product that is being submitted; indicate the specification section number and paragraph number to which it pertains.

1.5.2.3.1 Product Information

Supplement product data with material prepared for the project to satisfy the submittal requirements where product data does not exist. Identify this material as developed specifically for the project, with information and format as required for submission of SD-07 Certificates.

Provide product data in units used in the Contract documents. Where product data are included in preprinted catalogs with another unit, submit the dimensions in contract document units, on a separate sheet.

1.5.2.3.2 Standards

Where equipment or materials are specified to conform to industry or technical-society reference standards of such organizations as the American National Standards Institute (ANSI), ASTM International (ASTM), National Electrical Manufacturer's Association (NEMA), Underwriters Laboratories (UL), or Association of Edison Illuminating Companies (AEIC), submit proof of such compliance. The label or listing by the specified organization will be acceptable evidence of compliance. In lieu of the label or listing, submit a certificate from an independent testing organization, competent to perform testing, and approved by the Contracting Officer. State on the certificate that the item has been tested in accordance with the specified organization's test methods and that the item complies with the specified organization's reference standard.

1.5.2.3.3 Data Submission

Collect required data submittals for each specific material, product, unit of work, or system into a single submittal that is marked for choices, options, and portions applicable to the submittal. Mark each copy of the product data identically. Partial submittals will not be accepted for expedition of the construction effort.

Submit the manufacturer's instructions before installation.

1.5.2.4 Format of SD-04 Samples

1.5.2.4.1 Sample Characteristics

Furnish samples in the following sizes, unless otherwise specified or unless the manufacturer has prepackaged samples of approximately the same size as specified:

a. Sample of Equipment or Device: Full size.

b. Sample of Materials Less Than 2 by 3 inches: Built up to 8 1/2 by 11 inches.

c. Sample of Materials Exceeding 8 1/2 by 11 inches: Cut down to 8 1/2 by 11 inches and adequate to indicate color, texture, and material variations.

d. Sample of Linear Devices or Materials: 10 inch length or length to be supplied, if less than 10 inches. Examples of linear devices or materials are conduit and handrails.

e. Sample Volume of Nonsolid Materials: Pint. Examples of nonsolid

materials are sand and paint.

f. Color Selection Samples: 2 by 4 inches. Where samples are specified for selection of color, finish, pattern, or texture, submit the full set of available choices for the material or product specified. Sizes and quantities of samples are to represent their respective standard unit.

g. Sample Panel: 4 by 4 feet.

h. Sample Installation: 100 square feet.

1.5.2.4.2 Sample Incorporation

Reusable Samples: Incorporate returned samples into work only if so specified or indicated. Incorporated samples are to be in undamaged condition at the time of use.

Recording of Sample Installation: Note and preserve the notation of any area constituting a sample installation, but remove the notation at the final clean-up of the project.

1.5.2.4.3 Comparison Sample

Samples Showing Range of Variation: Where variations in color, finish, pattern, or texture are unavoidable due to nature of the materials, submit sets of samples of not less than three units showing extremes and middle of range. Mark each unit to describe its relation to the range of the variation.

When color, texture, or pattern is specified by naming a particular manufacturer and style, include one sample of that manufacturer and style, for comparison.

1.5.2.5 Format of SD-05 Design Data

Provide design data and certificates on 8 1/2 by 11 inch paper. Provide a bound volume for submittals containing numerous pages.

1.5.2.6 Format of SD-06 Test Reports

Provide reports on 8 1/2 by 11 inch paper in a complete bound volume.

By prominent notation, indicate each report in the submittal. Indicate the specification number and paragraph number to which each report pertains.

1.5.2.7 Format of SD-07 Certificates

Provide design data and certificates on 8 1/2 by 11 inch paper. Provide a bound volume for submittals containing numerous pages.

1.5.2.8 Format of SD-08 Manufacturer's Instructions

Present manufacturer's instructions submittals for each section as a complete, bound volume. Include the manufacturer's name, trade name, place of manufacture, and catalog model or number on product data. Also include applicable federal, military, industry, and technical-society publication references. If supplemental information is needed to clarify

the manufacturer's data, submit it as specified for SD-07 Certificates.

Submit the manufacturer's instructions before installation.

1.5.2.8.1 Standards

Where equipment or materials are specified to conform to industry or technical-society reference standards of such organizations as the American National Standards Institute (ANSI), ASTM International (ASTM), National Electrical Manufacturer's Association (NEMA), Underwriters Laboratories (UL), or Association of Edison Illuminating Companies (AEIC), submit proof of such compliance. The label or listing by the specified organization will be acceptable evidence of compliance. In lieu of the label or listing, submit a certificate from an independent testing organization, competent to perform testing, and approved by the Contracting Officer. State on the certificate that the item has been tested in accordance with the specified organization's test methods and that the item complies with the specified organization's reference standard.

1.5.2.9 Format of SD-09 Manufacturer's Field Reports

Provide reports on 8 1/2 by 11 inch paper in a complete bound volume.

By prominent notation, indicate each report in the submittal. Indicate the specification number and paragraph number to which each report pertains.

1.5.2.10 Format of SD-10 Operation and Maintenance Data (O&M)

Comply with the requirements specified in Section 01 78 23 OPERATION AND MAINTENANCE DATA for O&M Data format.

1.5.2.11 Format of SD-11 Closeout Submittals

When the submittal includes a document that is to be used in the project or is to become part of the project record, other than as a submittal, do not apply the Contractor's approval stamp to the document itself, but to a separate sheet accompanying the document.

Provide data in the unit of measure used in the contract documents.

1.5.3 Source Drawings for Shop Drawings

1.5.3.1 Source Drawings

The entire set of source drawing files (DWG) will not be provided to the Contractor. Request the specific Drawing Number for the preparation of shop drawings. Only those drawings requested to prepare shop drawings will be provided. These drawings are provided only after award.

1.5.3.2 Terms and Conditions

Data contained on these electronic files must not be used for any purpose other than as a convenience in the preparation of construction data for the referenced project. Any other use or reuse is at the sole risk of the Contractor and without liability or legal exposure to the Government. The Contractor must make no claim, and waives to the fullest extent permitted by law any claim or cause of action of any nature against the Government,

its agents, or its subconsultants that may arise out of or in connection with the use of these electronic files. The Contractor must, to the fullest extent permitted by law, indemnify and hold the Government harmless against all damages, liabilities, or costs, including reasonable attorney's fees and defense costs, arising out of or resulting from the use of these electronic files.

These electronic source drawing files are not construction documents. Differences may exist between the source drawing files and the corresponding construction documents. The Government makes no representation regarding the accuracy or completeness of the electronic source drawing files, nor does it make representation to the compatibility of these files with the Contractor hardware or software. The Contractor is responsible for determining if any conflict exists. In the event that a conflict arises between the signed and sealed construction documents prepared by the Government and the furnished source drawing files, the signed and sealed construction documents govern. Use of these source drawing files does not relieve the Contractor of the duty to fully comply with the contract documents, including and without limitation the need to check, confirm and coordinate the work of all contractors for the project. If the Contractor uses, duplicates or modifies these electronic source drawing files for use in producing construction data related to this contract, remove all previous indication of ownership (seals, logos, signatures, initials and dates).

1.5.4 Electronic File Format

Provide submittals in electronic format, with the exception of material samples required for SD-04 Samples items. In addition to the electronic submittal, provide three hard copies of the submittals. Compile the submittal file as a single, complete document, to include the Transmittal Form described within, and also separately attach the native files which were used to create PDF. The attached files should include the original digital files used to create the submittal. Name the electronic submittal file specifically according to its contents, and coordinate the file naming convention with the Contracting Officer. Electronic files must be of sufficient quality that all information is legible. Use PDF as the electronic format, unless otherwise specified or directed by the Contracting Officer. Generate PDF files from original documents with bookmarks so that the text included in the PDF file is searchable and can be copied. If documents are scanned, optical character resolution (OCR) routines are required. Index and bookmark files exceeding 30 pages to allow efficient navigation of the file. When required, the electronic file must include a valid electronic signature or a scan of a signature.

E-mail electronic submittal documents smaller than 10MB to an e-mail address as directed by the Contracting Officer. Provide electronic documents over 10 MB on an optical disc or through an electronic file sharing system such as the DOD SAFE Web Application located at the following website: https://safe.apps.mil/.

1.6 QUANTITY OF SUBMITTALS

1.6.1 Number of SD-01 Preconstruction Submittal Copies

Unless otherwise specified, submit three sets of administrative submittals.

1.6.2 Number of SD-04 Samples

a. Submit two samples, or two sets of samples showing the range of variation, of each required item. One approved sample or set of samples will be retained by the approving authority and one will be returned to the Contractor.

b. Submit one sample panel or provide one sample installation where directed. Include components listed in the technical section or as directed.

c. Submit one sample installation, where directed.

d. Submit one sample of nonsolid materials.

1.6.3 Number of SD-06 Test Report Copies

Submit in compliance with quantity and quality requirements specified for shop drawings, other than field test results that will be submitted with QC reports.

1.7 INFORMATION ONLY SUBMITTALS

Submittals without a "G" designation must be certified by the QC manager and submitted to the Contracting Officer for information-only. Provide information-only submittals to the Contracting Officer a minimum of 30 calendar days prior to the Preparatory Meeting for the associated Definable Feature of Work (DFOW). Approval of the Contracting Officer is not required on information only submittals. The Contracting Officer will mark "receipt acknowledged" on submittals for information and will return only the transmittal cover sheet to the Contractor. Normally, submittals for information only will not be returned. However, the Government reserves the right to return unsatisfactory submittals and require the Contractor to resubmit any item found not to comply with the contract. This does not relieve the Contractor from the obligation to furnish material conforming to the plans and specifications; will not prevent the Contracting Officer from requiring removal and replacement of nonconforming material incorporated in the work; and does not relieve the Contractor of the requirement to furnish samples for testing by the Government laboratory or for check testing by the Government in those instances where the technical specifications so prescribe.

1.8 PROJECT SUBMITTAL REGISTER

A sample Project Submittal Register showing items of equipment and materials for when submittals are required by the specifications is provided as "Attachment A - Submittal Register."

1.8.1 Submittal Management

Prepare and maintain a submittal register, as the work progresses. Do not change data that is output in columns (c), (d), (e), and (f) as delivered by Government; retain data that is output in columns (a), (g), (h), and (i) as approved. As an attachment, provide a submittal register showing items of equipment and materials for which submittals are required by the specifications. This list may not be all-inclusive and additional submittals may be required. Maintain a submittal register for the project in accordance with Section 01 45 00.15 10 RESIDENT MANAGEMENT SYSTEM CONTRACTOR MODE(RMS CM). The Government will provide the initial

submittal register in electronic format with the following fields completed, to the extent that will be required by the Government during subsequent usage.

Column (c): Lists specification section in which submittal is required.

Column (d): Lists each submittal description (SD Number. and type, e.g., SD-02 Shop Drawings) required in each specification section.

Column (e): Lists one principal paragraph in each specification section where a material or product is specified. This listing is only to facilitate locating submitted requirements. Do not consider entries in column (e) as limiting the project requirements.

Thereafter, the Contractor is to track all submittals by maintaining a complete list, including completion of all data columns and all dates on which submittals are received by and returned by the Government.

1.8.2 Preconstruction Use of Submittal Register

Submit the submittal register. Include the QC plan and the project schedule. Verify that all submittals required for the project are listed and add missing submittals. Coordinate and complete the following fields on the register submitted with the QC plan and the project schedule:

Column (a) Activity Number: Activity number from the project schedule.

Column (g) Contractor Submit Date: Scheduled date for the approving authority to receive submittals.

Column (h) Contractor Approval Date: Date that Contractor needs approval of submittal.

Column (i) Contractor Material: Date that Contractor needs material delivered to Contractor control.

1.8.3 Contractor Use of Submittal Register

Update the following fields in the Government-furnished submittal register program or equivalent fields in the program used by the Contractor with each submittal throughout the contract.

Column (b) Transmittal Number: List of consecutive, Contractor-assigned numbers.

Column (j) Action Code (k): Date of action used to record Contractor's review when forwarding submittals to QC.

Column (l) Date submittal transmitted.

Column (q) Date approval was received.

1.8.4 Approving Authority Use of Submittal Register

Update the following fields:

Column (b) Transmittal Number: List of consecutive, Contractor-assigned numbers.

Column (l) Date submittal was received.

Column (m) through (p) Dates of review actions.

Column (q) Date of return to Contractor.

1.8.5 Action Codes

1.8.6 Delivery of Copies

Submit an updated electronic copy of the submittal register to the Contracting Officer with each invoice request. Provide an updated Submittal Register monthly regardless of whether an invoice is submitted.

1.9 VARIATIONS

Variations from contract requirements require Contracting Officer approval pursuant to contract Clause FAR 52.236-21 Specifications and Drawings for Construction, and will be considered where advantageous to the Government.

1.9.1 Considering Variations

Discussion of variations with the Contracting Officer before submission of a variation submittal will help ensure that functional and quality requirements are met and minimize rejections and resubmittals. For variations that include design changes or some material or product substitutions, the Government may require an evaluation and analysis by a licensed professional engineer hired by the contractor.

Specifically point out variations from contract requirements in a transmittal letter. Failure to point out variations may cause the Government to require rejection and removal of such work at no additional cost to the Government.

1.9.2 Proposing Variations

When proposing variation, deliver a submittal, clearly marked as a "VARIATION" to the Contracting Officer, with documentation illustrating the nature and features of the variation including any necessary technical submittals and why the variation is desirable and beneficial to Government. If lower cost is a benefit, also include an estimate of the cost savings. In addition to documentation required for variation, include the submittals required for the item. Clearly mark the proposed variation in all documentation.

"

Specifically point out variations from contract requirements in a transmittal letter. Failure to point out variations may cause the Government to require rejection and removal of such work at no additional cost to the Government.

Check the column "variation" of ENG Form 4025 for submittals that include variations proposed by the Contractor. Set forth in writing the reason for any variations and note such variations on the submittal. The Government reserves the right to rescind inadvertent approval of submittals containing unnoted variations.

1.9.3 Warranting that Variations are Compatible

When delivering a variation for approval, the Contractor warrants that this contract has been reviewed to establish that the variation, if incorporated, will be compatible with other elements of work.

1.9.4 Review Schedule Extension

In addition to the normal submittal 30 day review period, a period of 30 calendar days will be allowed for the Government to consider submittals with variations.

1.10 SCHEDULING

Schedule and submit concurrently product data and shop drawings covering component items forming a system or items that are interrelated. Submit pertinent certifications at the same time. No delay damages or time extensions will be allowed for time lost in late submittals. Allow an additional 14 calendar days for review and approval of submittals for refrigeration and HVAC control systems.

a. Coordinate scheduling, sequencing, preparing, and processing of submittals with performance of work so that work will not be delayed by submittal processing. The Contractor is responsible for additional time required for Government reviews resulting from required resubmittals. The review period for each resubmittal is the same as for the initial submittal.

b. Submittals required by the contract documents are listed on the submittal register. If a submittal is listed in the submittal register but does not pertain to the contract work, the Contractor is to include the submittal in the register and annotate it "N/A" with a brief explanation. Approval by the Contracting Officer does not relieve the Contractor of supplying submittals required by the contract documents but that have been omitted from the register or marked "N/A."

c. Resubmit the submittal register and annotate it monthly with actual submission and approval dates. When all items on the register have been fully approved, no further resubmittal is required.

Contracting Officer review will be completed within 30 calendar days after the date of submission.

1.11 GOVERNMENT APPROVING AUTHORITY

When the approving authority is the Contracting Officer, the Government will:

a. Note the date on which the submittal was received.

b. Review submittals for approval within the scheduling period specified and only for conformance with project design concepts and compliance

with contract documents.

c. Identify returned submittals with one of the actions defined in paragraph REVIEW NOTATIONS and with comments and markings appropriate for the action indicated.

Upon completion of review of submittals requiring Government approval, stamp and date submittals. 1 copy of the submittal will be retained by the Contracting Officer and 1 copy of the submittal will be returned to the Contractor.

1.11.1 Review Notations

Submittals will be returned to the Contractor with the following notations:

a. Submittals marked "approved" or "accepted" authorize proceeding with the work covered.

b. Submittals marked "approved as noted" or "approved, except as noted, resubmittal not required," authorize proceeding with the work covered provided that the Contractor takes no exception to the corrections.

c. Submittals marked "not approved," "disapproved," or "revise and resubmit" indicate incomplete submittal or noncompliance with the contract requirements or design concept. Resubmit with appropriate changes. Do not proceed with work for this item until the resubmittal is approved.

d. Submittals marked "not reviewed" indicate that the submittal has been previously reviewed and approved, is not required, does not have evidence of being reviewed and approved by Contractor, or is not complete. A submittal marked "not reviewed" will be returned with an explanation of the reason it is not reviewed. Resubmit submittals returned for lack of review by Contractor or for being incomplete, with appropriate action, coordination, or change.

e. Submittals marked "receipt acknowledged" indicate that submittals have been received by the Government. This applies only to "information-only submittals" as previously defined.

1.12 DISAPPROVED SUBMITTALS

Make corrections required by the Contracting Officer. If the Contractor considers any correction or notation on the returned submittals to constitute a change to the contract drawings or specifications, give notice to the Contracting Officer as required under the FAR clause titled CHANGES. The Contractor is responsible for the dimensions and design of connection details and the construction of work. Failure to point out variations may cause the Government to require rejection and removal of such work at the Contractor's expense.

If changes are necessary to submittals, make such revisions and resubmit in accordance with the procedures above. No item of work requiring a submittal change is to be accomplished until the changed submittals are approved.

1.13 APPROVED SUBMITTALS

The Contracting Officer's approval of submittals is not to be construed as

a complete check, and indicates only that

Approval or acceptance by the Government for a submittal does not relieve the Contractor of the responsibility for meeting the contract requirements or for any error that may exist, because under the Quality Control (QC) requirements of this contract, the Contractor is responsible for ensuring information contained with in each submittal accurately conforms with the requirements of the contract documents.

After submittals have been approved or accepted by the Contracting Officer, no resubmittal for the purpose of substituting materials or equipment will be considered unless accompanied by an explanation of why a substitution is necessary.

1.14 APPROVED SAMPLES

Approval of a sample is only for the characteristics or use named in such approval and is not be construed to change or modify any contract requirements. Before submitting samples, provide assurance that the materials or equipment will be available in quantities required in the project. No change or substitution will be permitted after a sample has been approved.

Match the approved samples for materials and equipment incorporated in the work. If requested, approved samples, including those that may be damaged in testing, will be returned to the Contractor, at its expense, upon completion of the contract. Unapproved samples will also be returned to the Contractor at its expense, if so requested.

Failure of any materials to pass the specified tests will be sufficient cause for refusal to consider, under this contract, any further samples of the same brand or make as that material. The Government reserves the right to disapprove any material or equipment that has previously proved unsatisfactory in service.

Samples of various materials or equipment delivered on the site or in place may be taken by the Contracting Officer for testing. Samples failing to meet contract requirements will automatically void previous approvals. Replace such materials or equipment to meet contract requirements.

1.15 WITHHOLDING OF PAYMENT

Payment for materials incorporated in the work will not be made if required approvals have not been obtained.

1.16 CERTIFICATION OF SUBMITTAL DATA

Certify the submittal data as follows on Form ENG 4025: "I certify that the above submitted items had been reviewed in detail and are correct and in strict conformance with the contract drawings and specifications except as otherwise stated.

_____NAME OF CONTRACTOR _____ SIGNATURE OF CONTRACTOR

PART 2 PRODUCTS

P2# 519087 - DSSC DLA Repair Building 27
Columbus, OH

Not Used

PART 3 EXECUTION

Not Used

-- End of Section --

P2# 519087 - DSSC DLA Repair Building 27
Columbus, OH

SECTION 01 35 26.00 06

GOVERNMENT SAFETY REQUIREMENTS
05/24

PART 1 GENERAL

1.1 REFERENCES

The publications listed below form a part of this specification to the extent referenced. The publications are referred to within the text by the basic designation only.

AMERICAN SOCIETY OF SAFETY PROFESSIONALS (ASSP)

ASSP A10.32	(2013) Fall Protection
ASSP A10.34	(2021) Protection of the Public on or Adjacent to Construction Sites
ASSP Z359.1	(2020) The Fall Protection Code

NATIONAL FIRE PROTECTION ASSOCIATION (NFPA)

NFPA 241	(2022) Standard for Safeguarding Construction, Alteration, and Demolition Operations
NFPA 51B	(2024) Standard for Fire Prevention During Welding, Cutting, and Other Hot Work

U.S. ARMY CORPS OF ENGINEERS (USACE)

EM 385-1-1	(2024) Safety and Health Requirements Manual

U.S. NATIONAL ARCHIVES AND RECORDS ADMINISTRATION (NARA)

29 CFR 1910	Occupational Safety and Health Standards
29 CFR 1915	Confined and Enclosed Spaces and Other Dangerous Atmospheres in Shipyard Employment
29 CFR 1926	Safety and Health Regulations for Construction
29 CFR 1926.500	Fall Protection

1.2 SUBMITTALS

Government approval/acceptance is required for submittals with a "G" designation; submittals not having a "G" designation are for information only. When used, a designation following the "G" designation identifies the office that will review the submittal for the Government. The following must be submitted in accordance with LRL Section 01 33 00.00 06 SUBMITTAL PROCEDURES:

SD-01 Preconstruction Submittals

Accident Prevention Plan (APP)
Bloodborne Pathogen Plan
Exposure Control Plan

Hearing Conservation Program
Respiratory Protection Plan
Health Hazard Control Program
Hazard Communication Program

Lead Compliance Plan & Specifications
Asbestos Abatement Plan & Specifications

Heat Stress Monitoring Plan
Cold Stress Monitoring Plan
Indoor Air Quality Management Plan
Mold Remediation Plan

Crystalline Silica Assessment
Fire Prevention Plan

Hazardous Energy Control Plan
Standard Pre-Lift Plan (LHE)
Critical Lift Plan - LHE

Fall Protection and Prevention Plan
Demolition/Renovation Plan (to include engineering survey)
Excavation/Trenching Plan

Steel Erection Plan

SD-06 Test Reports

Reports

Accident/Mishap Investigation Reports

Monthly Exposure Reports

Regulatory Citations and Violations

SD-07 Certificates

Confined Space Entry Permit

Hot work permit

Submit one copy of each permit/certificate attached to each daily Quality Control Report.

1.3 DEFINITIONS

a. Site Safety and Health Officer (SSHO). The qualified or competent person who is responsible for the on-site safety and health management required for the contract project work.

b. Competent Person, Fall Protection: A person designated in writing by the employer to be responsible for immediate supervising, implementing and monitoring of the fall protection program, who through training, knowledge and experience in fall protection and rescue systems and equipment, is capable of identifying, evaluating and addressing existing and potential fall hazards and, who has the authority to take prompt corrective measures with regard to such hazards.

c. High Visibility Accident. Any mishap which may generate publicity and/or high visibility.

d. Near Miss. A potentially serious act of commission or ommission that leads to an uncontrolled or unanticipated incident. The incident could have resulted in injury, illness, death, and/or property damage (including environmental damage) but was avoided by chance, and/or immediate, real-time mitigation.

e. Medical Treatment. Treatment administered by a physician or by registered professional personnel under the standing orders of a physician. Medical treatment does not include first aid treatment even through provided by a physician or registered personnel.

f. Qualified Person, Fall Protection: A person with a recognized degree or professional certificate and with extensive knowledge, training and experience in the fall protection and rescue field who is capable of designing, analyzing, evaluating and specifying fall protection and rescue systems; shall have an advanced understanding of the regulatory requirements, physical sciences and engineering principles that affect equipment and systems for FP and rescue; be able to calculate forces generated by an arrested fall, the total loading and the deflection of the fall arrest anchorage, the impact on the structural members to which the fall arrest system is attached and shall be able to determine safe locations of anchorages; shall supervise the design, selection, installation and inspection of certified anchorages and horizontal lifelines.

g. Recordable Injury, Illness, or Property Damage. Any work-related accident that results in:

(1) Death, regardless of the time between the injury and death, or the length of the illness;

(2) Days away from work (any time lost after day of injury/illness onset);

(3) Fatal injury / illness;

(4) Permanent totally disabling injury/illness;

(5) Permanent partial disabling injury/illness;

(6) One(1) or more persons hospitalized as inpatients as a result of a single occurrence;

(7) $5,000 or greater accidental property damage;

(8) Three(3) or more individuals become ill or have a medical condition which is suspected to be related to a site condition, or a hazardous or toxic agent on the site;

(9) Restricted work;

(10) Transfer to another job;

(11) Medical treatment beyond first aid;

(12) Loss of consciousness; or

(13) A significant injury or illness diagnosed by a physician or other licensed health care professional, even if it did not result in (1) through (13) above.

h. Reportable Accident. An occurences that causes an injury, occupational illness, or property damage of any kind.

i. "USACE" property and equipment specified in USACE EM 385-1-1 should be interpreted as Government property and equipment.

j. Weight Handling Equipment (WHE) Accident. A WHE accident occurs when any one or more of the six elements in the operating envelope fails to perform correctly during operation, including operation during maintenance or testing resulting in personnel injury or death; material or equipment damage; dropped load; derailment; two-blocking; overload; and/or collision, including unplanned contact between the load, crane, and/or other objects. A dropped load, derailment, two-blocking, overload and collision are considered accidents even though no material damage or injury occurs. A component failure (e.g., motor burnout, gear tooth failure, bearing failure) is not considered an accident solely due to material or equipment damage unless the component failure results in damage to other components (e.g., dropped boom, dropped load, roll over, etc.).

k. Low-slope roof. A roof having a slope less than or equal to 4 in 12 (vertical to horizontal).

l. Steep roof. A roof having a slope greater than 4 in 12 (vertical to horizontal).

k. Certified Safety Professional/Certified Industrial Hygienist Qualifications

(1) Certified Construction Health & Safety Technician (CHST). An individual who is currently certified by the Board of Certified Safety Professionals.

(2) Certified Industrial Hygienist (CIH). An individual who is currently certified by the American Board of Industrial Hygiene.

(3) Certified Safety Professional (CSP). An individual who is currently certified by the Board of Certified Safety Professionals.

(4) Certified Safety Trained Supervisor (STS). An individual who is

currently certified by the Board of Certified Safety Professionals.

(5) Associate Safety Professional (ASP). An individual who is currently certified by the Board of Certified Safety Professionals.

1.4 REGULATORY REQUIREMENTS

In addition to the detailed requirements included in the provisions of this contract, work performed shall comply with USACE EM 385-1-1, federal, state, local, host nation laws, ordinances, criteria, rules and regulations as listed above. Submit matters of interpretation of standards to the appropriate administrative agency for resolution before starting work. Where the requirements of this specification, applicable laws, criteria, ordinances, regulations, and referenced documents vary, the most stringent requirements shall apply.

1.5 SITE QUALIFICATIONS, DUTIES AND MEETINGS

1.5.1 Personnel Qualifications

1.5.1.1 Site Safety and Health Officer Qualifications(SSHO)

a. A Site Safety and Health Officer (SSHO)and alternate(s) must be provided at the work site at all times and will be a member of the onsite work organization and be responsible for overall management of the safety and occupational health program. The SSHO will have the authority to act in all safety matters for the Contractor at all times to perform safety and occupational health management, surveillance, inspections, and safety enforcement for the Contractor. The SSHO and alternate(s) will be employed by the Prime Contractor and must report to a corporate safety official or other corporate official not engaged in quality control or supervision.

The SSHO must be:

assigned no other duties except being the SSHO, will not be the CQC System Manager or Superintendent.

b. The SSHO and alternate(s)shall have an experience Level as follows and the Contractor must show evidence that the SSHO and alternate(s) have met these requirements. When an alternate is required for the project, the alternate shall have the same experience level and other qualifications as the SSHO. In addition, the SSHO and alternate(s) are also required to have:

(1) Completed, as a minimum, the 30-Hour OSHA, provide the OSHA Training Card, Construction Industry safety class with current First Aid and CPR Training / AED.

(2) Either a person with 10 years of demonstratable SSHO experience on similar projects or a College graduate with Five (5) years of Construction Industry safety experience on similar projects in supervising or managing general or industry construction (managing safety programs or processes or conducting hazard analyses and developing controls).

(3) Maintained experience through having taken 24 hours of Competent Person Fall Protection Training, 8 hours of Competent Person in Scaffolding per EM 385-1-1: 15 MAR 2024 Version of documented formal

or on-line safety and health related coursework in the past four years. The training must be applicable to the work being performed on the contract. Teaching is not considered the equivalent of attending training.

Formal or on-line safety and health related course work must correspond with the Definable Features of Work listed in 01 32 01.00 06 PROJECT SCHEDULE and as defined in 01 45 04.10 06 CONTRACTOR QUALITY CONTROL

The 30-hour OSHA course is not considered part of the formal or on-line safety and health related coursework.

(4) SSHO must be able to demonstrate training in the following areas: personal protective equipment and clothing to include selection, use and maintenance; hazard communication; excavation; scaffolding; fall protection; ; confined space; health hazard recognition, evaluation and control of chemical, physical and biological agents; and, other.

c. To insure that safety and health conditions are maintained/enforced at all times, and a SSHO is present at all times, the Contractor will designate one or more alternates to perform the safety and health requirements stated herein to cover any period when the SSHO can not be present, such as during absences for vacations/extended sickness, or when there are multiple shifts that requires additional coverage. The alternate(s) will meet the same qualifications, training, education requirements as the SSHO.

d. The Contractor must identify the SSHO and alternate(s)for this project and will submit qualifications to the Government in resume form for acceptance. A copy of the letter to the SSHO and alternate(s) signed by an authorized official of the firm describing responsibilities and delegating authority to stop work when safety or occupational health of workers is compromised must be provided to the Government.

e. Acceptance of the Contractor's SSHO and alternate(s) is required prior to the start of construction. Acceptance is conditional and will be predicated on satisfactory performance during construction. The Government reserves the right to require the Contractor to make changes to operations including removal of personnel, as necessary, to obtain a safe work site. At no time will the job be permitted to operate without a SSHO on duty at the work site.

f. Duties of the SSHO will include, at a minimum, the following in addition to the duties now listed per other paragraphs of this Section:

(1) Prepare the Contractor's Accident Prevention Plan and associated work Safety Plan(s), and Activity Hazard Analysis for each definable feature of work;

(2) Provide safety indoctrination to all construction site visitors;

(3) Ensure the Contractor's accepted Accident Prevention Plan is carried out;

(4) Ensure that Contractor/subcontractor employees have been provided with all relevant training as required per the EM 385-1-1 and as outlined in the accepted Accident Prevention plan.

(5) Conducts daily walk through of the site ensuring work is being accomplished safely, personnel protective equipment meets applicable OSHA/EPA requirements, and occupational health is not compromised;

(6) Attend and participate in all preparatory and initial quality control phase meetings;

(7) Ensure weekly worker safety meetings are conducted and relevant to current and upcoming work

(8) Ensure monthly supervisory safety meetings are conducted and relevant to current and future work;

(9) Ensure accident investigations are conducted and the required reports are completed and provided. Maintain the OSHA Form 300 for prime contractor

(10) Produce a Daily Safety Report of activities performed in accordance with other paragraphs of this section, and ensure this report is attached to the daily Quality Control Report.. The Daily Safety Report will include observations made, corrective actions for identified deficiencies, and accident and/or near-misses experienced.

(11) Provide minutes for weekly and monthly safety meetings, minutes to be attached with the Daily Safety Report.

1.5.2 Personnel Duties

1.5.2.1 Site Safety and Health Officer (SSHO)

a. Conduct daily safety and health inspections and maintain a written log which includes area/operation inspected, date of inspection, identified hazards, recommended corrective actions, estimated and actual dates of corrections. Safety inspection logs shall be attached to the Contractors' daily quality control report.

b. Maintain applicable safety reference material on the job site.

c. Attend the pre-construction conference, pre-work safety conference, pre-work meetings including preparatory inspection meeting, and periodic in-progress meetings.

d. Implement and enforce accepted APPS and AHAs.

e. Maintain a safety and health deficiency tracking system that monitors outstanding deficiencies until resolution. A list of unresolved safety and health deficiencies must be posted on the safety bulletin board.

f. Ensure sub-contractor compliance with safety and health requirements.

g. Other duties as identified per LRL Section 01 45 04.10 06 Contractor Quality Control. Failure to perform the above duties shall result in dismissal of the SSHO, and/or CQC System Manager, and/or superintendent and a project work stoppage. The project work stoppage will remain in effect pending approval of a suitable replacement.

1.5.3 Meetings

1.5.3.1 Prework Safety Conference

a. The purpose of the prework safety conference is for the Contractor and the Contracting Officer's representatives to become acquainted and explain the functions and operating procedures of their respective organizations and to reach mutual understanding relative to the administration of the overall project's APP before the initiation of work. The prework safety conference will not be scheduled untill a preliminary APP is submitted and accepted.

b. Contractor representatives who have a responsibility or significant role in accident prevention on the project must attend the prework safety conference. At a minimum, the attendees will include the project superintendent, Site Safety and Health Officer, Quality Control System Manager, and any other assigned safety and health professionals who participated in the development of the APP (including the Activity Hazard Analyses (AHAs) and special plans, program and procedures associated with it).

c. The Contractor will discuss the details of the submitted APP to include incorporated plans, programs, procedures and a listing of anticipated AHAs that will be developed and implemented during the performance of the contract. The list of Definable Features of Work will be reviewed at the conference and an agreement will be reached between the Contractor and the Contracting Officer's representative to determine applicable AHAs to be prepared. . In addition, a schedule for the preparation, submittal, review, and acceptance of AHAs will be established to preclude project delays.

d. The prework safety conference will not be scheduled until a preliminary APP is submitted and accepted. Work will not begin until after a Prework Safety Conference has been conducted.

e. The functions of a prework safety conference, may take place at the Post-Award Kickoff meeting for Design Build Contracts.

1.5.3.2 Weekly Safety Meetings

Must be conducted and documented as required by EM 385-1-1, Chapter 2-8(4)(a-c). Documentation as Required in EM 385-1-1, Chapter 2-8(4)(b)will be attached to the Contractors' daily quality control report.

1.5.3.3 Work Phase Meetings

The appropriate AHA will be reviewed and attendance documented by the Contractor at the preparatory, initial, and follow-up control phases of quality control inspection in accordance with LRL Section 01 45 04.10 06 CONTRACTOR QUALITY CONTROL. The analysis will be used during daily inspections to ensure the implementation and effectiveness of safety and health controls; and the results reported on the Contractors' daily quality control Report.

1.6 TRAINING

1.6.1 New Employee Indoctrination

New employees (prime and sub-contractor) will be proviede indoctrination

training as outlined in EM 385-1-1, Chapter 2-3(6)(a-f). Documentation of this orientation will be kept on file at the project site and provided to the Contracting Officer upon request.

1.6.2 Periodic Training

Provide Safety and Health Training in accordance with USACE EM 385-1-1 and the accepted APP. Documentation of training will be kept on file at the project site and will be provided to the Contracting Officer upon request

1.6.3 Training on Activity Hazard Analysis (AHA)

Prior to beginning a new control phase, training will be provided to all affected employees to include a review of the AHA to be implemented.

1.7 ACCIDENT PREVENTION PLAN (APP)

a. The Contractor must use a qualified person to prepare the written site-specific APP. Prepare the APP in accordance with the format and requirements of USACE EM 385-1-1 and as supplemented herein. Cover all paragraph and subparagraph elements in USACE EM 385-1-1, Appendix A, "Minimum Basic Outline for Accident Prevention Plan".
b. Submit the APP to the Contracting Officer thirty (30) calendar days prior to the date of the prework safety conference for acceptance. Work cannot proceed without an accepted APP. The Contracting Officer reviews and comments on the Contractor's submitted APP and accepts it when it meets the requirements of the contract provisions and EM 385-1-1.

c. Acceptance is conditional and will be predicated on satisfactory performance during the construction. Once accepted by the Contracting Officer, the APP and attachments will be enforced as part of the contract. Disregarding the provisions of this contract or the accepted APP will be cause for stopping of work, at the discretion of the Contracting Officer, until the matter has been rectified. Work cannot proceed without an accepted APP.

d. Once work begins, the APP must be evaluated for updates throughout the life of the project to ensure it is site specific. Changes, revisions, or updates to the accepted APP must be reviewed and approved by the contractor and submitted to the KO or COR for acceptance. Should hazards outside the accepted APP become evident,all necessary action(s) must be taken to restore and maintain safe working conditions in order to safeguard onsite personnel, visitors, the public (as defined by ASSP A10.34,) and the environment.

e. Copies of the accepted plan will be maintained at the contractor's job site office.

f. The APP must be continuously reviewed and amended, as necessary, throughout the life of the contract. Activities not identified in the currently accepted APP will be incorporated into the plan as they are discovered and resubmitted for acceptance. Work related to that acitivity will not begin until the APP is updated and accepted.

1.8 ACTIVITY HAZARD ANALYSIS (AHA)

a. The Activity Hazard Analysis (AHA) must be completed in accordance with USACE EM 385-1-1 requirements , using ENG Form 6206, current edition. Submit the AHA for review at least fifteen (15) calendar days prior to the

start of each definable feature of work.

b. An AHA will be developed by the Contractor for every operation involving a type of work presenting hazards not experienced in previous project operations or where a new work crew or subcontractor is to perform work. The AHA must be completed in accordance with EM 385-1-1, Chapter 2-6.

c. The analysis should be used as part of the daily inspections to ensure the implementation and effectiveness of the activity's safety and health controls.

d. The AHA list will be reviewed periodically (at least monthly) at the Contractor supervisory safety meeting and updated as necessary when procedures, scheduling, or hazards change.

e. Activity hazard analyses will be evaluated for updates throughout the life of the project to ensure they are site specific. AHAs will be updated as necessary to provide an effective response to changing work conditions and activities. Changes, revisions, or updates to the accepted AHAs must be reviewed and approved by the contractor, to include the on-site superintendent, site safety and health officer and competent persons, and submitted to the KO or COR for acceptance.

f. The activity hazard analyses will be developed using the project schedule as the basis for the activities performed. Any activities listed on the project schedule will require an AHA. The AHAs will be developed by the contractor, supplier or subcontractor and provided to the prime contractor for submittal to the Contracting Officer.

1.9 DISPLAY OF SAFETY INFORMATION

Within seven (7) calendar day after commencement of work, erect a safety bulletin board at the job site. The safety bulletin board will include all required information information as required per the EM 385-1-1, Chapter 2. The safety bulletin board will be continously maintained to ensure the accuracy and applicability of the posted material.

1.10 SITE SAFETY REFERENCE MATERIALS

Maintain safety-related references applicable to the project, including those listed in the article "References", all applicable equipment manufacturer's manuals, and those required per the EM 385-1-1.

1.11 EMERGENCY MEDICAL TREATMENT

Contractors will arrange for their own emergency medical treatment. Government has no responsibility to provide emergency medical treatment.

1.12 REPORTS

Submit reports in accordance with the requirements of this paragraph. All reports must be maintained on the project site and submitted as part of the Contractors' daily quality control report.

1.12.1 Accident Notification

Notify the Contracting Officer as soon as practical, but not later than eight hours, after any accident involving a fatality, in-patient

hospitalizations, amputation, eye less, or property damage over $600,000. For all other accidents and near-misses, notify the contracting officer no later than 24 hours. Accident and near-miss notifaction will be made using the ENG Form 3394 (2021), see section 1.e of the ENG Form 3394. Unless instructed otherwise, preserve the conditions and evidence on the accident site until the Government investigation team arrives on-site and Government investigation is conducted.

1.12.2 Accident Reports

The Prime Contractor will conduct an accident investigation and determine causal factors for all accidents and near-misses. Completed accident and near-miss investigations will be recorded using the ENG Form 3394 (2021) and will be provide to the the Contracting Officer within seven (7) calendar day(s) of the accident. All Accident and Near-Miss Investigations will be conducted in accordance with EM 385-1-1, Chapter 2. The Contracting Officer will provide copies of any required or special forms.

1.12.3 Monthly Exposure Reports

Monthly exposure reporting to the Contracting Officer must be provided monthly using ENG Form 4025. This report is a compilation of employee-hours worked each month for all site workers, both prime and subcontractor.

1.12.4 Regulatory Citations and Violations

Notify the Contracting Officer immediately of any OSHA or other regulatory agency inspection or visit, and provide the Contracting Officer with a copy of each citation, report, and contractor response. Correct violations and citations promptly and provide written corrective actions to the Contracting Officer.

1.12.5 Crane Reports

Submit crane inspection reports in accordance with USACE EM 385-1-1 and as specified herein with Daily Reports of Inspections.

1.12.6 Crane Certificate of Compliance

The Contractor must provide a Certificate of Compliance for each crane entering an activity under this contract (see Contracting Officer for a blank certificate). Certificate will state that the crane and rigging gear meet applicable OSHA regulations (with the Contractor citing which OSHA regulations are applicable, e.g., cranes used in construction, demolition, or maintenance must comply with 29 CFR 1926 and USACE EM 385-1-1 Chapter 16. Certify on the Certificate of Compliance that the crane operator(s) is qualified and trained in the operation of the crane to be used. For cranes at DOD activities in foreign countries, the Contractor must certify that the crane and rigging gear conform to the appropriate host country safety standards. The Contractor will also certify that all of its crane operators working on the DOD activity have been trained in the proper use of all safety devices (e.g., anti-two block devices). These certifications will be posted on the crane.

1.12.7 Critical Lift Plan

Prior to performing Load Handling Equipment Critical Lifts, as identified

in EM 385-1-1, a detailed Critical Lift Plan will be developed and written by a competent person complying with all USACE requirements in EM 385-1-1. As part of the Critical Lift Plan, Proof of qualification for Crane Operators, lift supervisors and the rigger must be submitted to the Contracting Officer.

1.12.8 Confined Space Entry Permit

In accordance with 29 CFR 1910, 29 CFR 1915 and EM 385-1-1, prior to entering a permit required confined space, a confined space entry permit will be completed, reviewed, processed, signed and maintained. The entry supervisor or manager will be required to sign all permits daily before entry.

1.13 HOT WORK PERMIT

Prior to performing "Hot Work" (welding, cutting, etc.) or operating other flame-producing/spark producing devices, a written Hot Work Permit must be requested from the area, base, post or local fire district. CONTRACTORS ARE REQUIRED TO MEET ALL CRITERIA BEFORE A PERMIT IS ISSUED. The Contractor will provide at least two (2) twenty (20) pound 4A:20 BC rated extinguishers for normal "Hot Work". All extinguishers will be current inspection tagged, approved safety pin and tamper resistant seal. It is also mandatory to have a designated FIRE WATCH for any "Hot Work" done at this activity. The Fire Watch must be trained in accordance with NFPA 51B and remain on-site for a minimum of 60 minutes after completion of the task or as specified on the hot work permit.

When starting work in the facility, Contractors will train their personnelon the locations of the nearest fire alarm boxes and place in memory the emergency Fire Division phone number. Periodic re-training will be provided as necessary to ensure awareness. ANY FIRE, NO MATTER HOW SMALL, WILL BE REPORTED TO THE RESPONSIBLE FIRE DIVISION IMMEDIATELY.

PART 2 PRODUCTS NOT USED

PART 3 EXECUTION

3.1 CONSTRUCTION AND/OR OTHER WORK

The Contractor must comply with USACE EM 385-1-1, NFPA 241, the APP, the AHA, Federal and/or State OSHA regulations, and other related submittals and installation/activity fire and safety regulations. The most stringent standard will prevail.

3.1.1 Hazardous Material Use and Exclusions

Each hazardous material must receive approval by the Authority Having Juristiction (AHJ) prior to being brought onto the job site or prior to any other use in connection with this contract. Any exclusions must be coordinated through the AHJ. The Contracting Officer must be notified of any exclusions provided by the AHJ. See 01 57 19.00 06 Temporary Environmental Controls and Permits

3.1.2 Unforeseen Hazardous Material

The design should have identified materials such as PCB, lead paint, and friable and non-friable asbestos. If additional material, not indicated, that may be hazardous to human health upon disturbance during construction operations is encountered, stop that portion of work and notify the Contracting Officer immediately. Within fourteen (14) calendar days the Government will determine if the material is hazardous. If material is not hazardous or poses no danger, the Government will direct the Contractor to proceed without change. If material is hazardous and handling of the material is necessary to accomplish the work, the Government will issue a modification pursuant to FAR 52.243-4 - Changes and FAR 52.236-2 - Differing Site Conditions.

3.1.3 Unanticipated Discovery of Ordnance and Explosives

If during the course of construction operations, any unanticipated or unplanned discovery of Munitions and Explosives of Concern (MEC), Explosive Media, Chemical Warfare Media (CWM), or chemical agent contaminated media (CACM) occurs, all work must cease, personnel must withdraw from the affected area and the Contracting Officer's Representative (COR) must be contacted for further information and direction. Refer ER 385-1-95 and EM 385-1-97 for additional requirements.

3.2 PRE-OUTAGE COORDINATION MEETING

Contractors are required to apply for utility outages though the Installation .Special requirements for electrical outage requests are contained 00 08 00.00 06, 01 11 00. Work must be performed in accordance with EM 385-1-1, Chapter 12, and NFPA 70 E, and any applicable regulations. Prior to beginning work on the utility system requiring shut down, the Contractor must attend a pre-outage coordination meeting with the Contracting Officer and the Installation representative to review the scope of work and the lock-out/tag-out procedures for worker protection. No work will be performed on energized electrical circuits unless proof is provided that no other means exist. A pre outage coordination meeting will be conducted per the three phase inspection process, to include the AHA.

3.3 FALL HAZARD PROTECTION AND PREVENTION PROGRAM

The Contractor will establish a fall protection and prevention program, for the protection of all employees exposed to fall hazards. The program must include company policy, identify responsibilities, education and training requirements, fall hazard identification, prevention and control measures, inspection, storage, care and maintenance of fall protection equipment and rescue and evacuation procedures.

3.3.1 Training

As part of the Fall Hazard Protection and Prevention Program, the Contractor will provide training to individuals who might be exposed to fall hazards on the site. Training will be in accordance with USACE EM 385-1-1, Chapter 21

3.3.2 Fall Protection Equipment and Systems

The Contractor must enforce use of the fall protection equipment and systems designated for each specific work activity in the Fall Protection and Prevention Plan and/or AHA at all times when an employee is exposed to

a fall hazard or on a surface 6 feet or more above lower levels. Fall protection systems such as guardrails/toeboards, personnel fall arrest system, safety nets, etc., are required when working within 6 feet of any leading edge and employees will be protected from fall hazards as specified in EM 385-1-1, Chapter 21. In addition to the required fall protection systems, safety skiff, personal floatation devices, life rings etc., are required when working above or next to water in accordance with USACE EM 385-1-1, Chapter 21. Personal fall arrest systems are required when working from an articulating or extendible boom, swing stages, or suspended platform. In addition, personal fall arrest systems are required when operating other equipment such as scissor lifts if the work platform is capable of being positioned outside the wheelbase. The need for tying-off in such equipment is to prevent ejection of the employee from the equipment during raising, lowering, or travel. Fall protection must comply with 29 CFR 1926.500, Subpart M, USACE EM 385-1-1 and ASSP A10.32.

3.3.2.1 Personal Fall Arrest Equipment

Personal fall arrest equipment, systems, subsystems, and components must meet ASSP Z359.1. Only a full-body harness with a shock-absorbing lanyard or self-retracting lanyard is an acceptable personal fall arrest body support device. Body belts may only be used as a positioning device system (for uses such as steel reinforcing assembly and in addition to an approved fall arrest system). Harnesses must have a fall arrest attachment affixed to the body support (usually a Dorsal D-ring) and specifically designated for attachment to the rest of the system. Only locking snap hooks and carabiners will be used. Webbing, straps, and ropes shall be made of synthetic fiber. The maximum free fall distance when using fall arrest equipment shall not exceed (6 feet). The total fall distance and any swinging of the worker (pendulum-like motion) that can occur during a fall shall always be taken into consideration when attaching a person to a fall arrest system.

3.3.3 Fall Protection for Roofing Work

Fall protection controls must be implemented based on the type of roof being constructed and work being performed. The roof area to be accessed will be evaluated for its structural integrity including weight-bearing capabilities for the projected loading.

a. Low Sloped Roofs:

(1) For work within (6 feet) of an edge, on low-slope roofs, personnel shall be protected from falling by use of personal fall arrest systems, guardrails, or safety nets.

(2) For work greater than (6 feet) from an edge, warning lines, if utilized, must be erected and installed in accordance with 29 CFR 1926.500 and USACE EM 385-1-1, Chapter 21-8.i.

b. Steep-Sloped Roofs: Work on steep-sloped roofs requires a personal fall arrest system, guardrails with toe-boards, or safety nets. This requirement also includes residential or housing type construction.

3.3.4 Existing Anchorage

Existing anchorages, to be used for attachment of personal fall arrest

equipment, must be certified (or re-certified) by a qualified person for fall protection in accordance with ASSP Z359.1. Exiting horizontal lifeline anchorages must be certified (or re-certified) by a registered professional engineer with experience in designing horizontal lifeline systems.

3.3.5 Horizontal Lifelines

Horizontal lifelines will be designed, installed, certified and used under the supervision of a qualified person for fall protection as part of a complete fall arrest system which maintains a safety factor of 2 (29 CFR 1926.500).

3.3.6 Guardrails and Safety Nets

Guardrails and safety nets will be designed, installed and used in accordance with EM 385-1-1 and 29 CFR 1926 Subpart M.

-- End of Section --

P2# 519087 - DSSC DLA Repair Building 27
Columbus, OH

SECTION 01 42 00

SOURCES FOR REFERENCE PUBLICATIONS
05/24

PART 1 GENERAL

1.1 REFERENCES

Various publications are referenced in other sections of the specifications to establish requirements for the work. These references are identified in each section by document number, date and title. The document number used in the citation is the number assigned by the standards producing organization (e.g., ASTM B564 Standard Specification for Nickel Alloy Forgings). However, when the standards producing organization has not assigned a number to a document, an identifying number has been assigned for reference purposes.

1.2 ORDERING INFORMATION

The addresses of the standards publishing organizations whose documents are referenced in other sections of these specifications are listed below, and if the source of the publications is different from the address of the sponsoring organization, that information is also provided.

AMERICAN SOCIETY OF MECHANICAL ENGINEERS (ASME)
Two Park Avenue
New York, NY 10016-5990
Ph: 800-843-2763
Fax: 973-882-1717
E-mail: customercare@asme.org
Internet: https://www.asme.org/

AMERICAN SOCIETY OF SAFETY PROFESSIONALS (ASSP)
520 N. Northwest Highway
Park Ridge, IL 60068
Ph: 847-699-2929
E-mail: customerservice@assp.org
Internet: https://www.assp.org/

AMERICAN WATER WORKS ASSOCIATION (AWWA)
6666 W. Quincy Avenue
Denver, CO 80235 USA
Ph: 303-794-7711 or 800-926-7337
Fax: 303-347-0804
Internet: https://www.awwa.org/

ASTM INTERNATIONAL (ASTM)
100 Barr Harbor Drive, P.O. Box C700
West Conshohocken, PA 19428-2959
Ph: 610-832-9500
Fax: 610-832-9555
E-mail: service@astm.org
Internet: https://www.astm.org/

NATIONAL FIRE PROTECTION ASSOCIATION (NFPA)
1 Batterymarch Park
Quincy, MA 02169-7471

Ph: 800-344-3555
Fax: 800-593-6372
Internet: https://www.nfpa.org

U.S. ARMY (DA)
Army Publishing Directorate
9301 Chapek Rd., Bldg 1458
Fort Belvoir, VA 22060-5447
Ph: 703-614-3727
E-mail: usarmy.pentagon.hqda-apd.mbx.customer-service@mail.mil
Internet: https://armypubs.army.mil/

U.S. ARMY CORPS OF ENGINEERS (USACE)
CRD-C DOCUMENTS available on Internet:
http://www.wbdg.org/ffc/army-coe/standards
Order Other Documents from:
Official Publications of the Headquarters, USACE
E-mail: hqpublications@usace.army.mil
Internet: http://www.publications.usace.army.mil/
or
https://www.hnc.usace.army.mil/Missions/Engineering-Directorate/TECHINFO/

U.S. CODE (USC)
Office of the Law Revision Counsel
U.S. House of Representatives
H2-308 Ford House Office Building
Washington, DC 20515
Ph: 202-226-2411
E-mail: uscode@mail.house.gov
Internet: http://uscode.house.gov/

U.S. ENVIRONMENTAL PROTECTION AGENCY (EPA)
1200 Pennsylvania Avenue, N.W.
Washington, DC 20004
Ph: 202-564-4700
Internet: https://www.epa.gov
--- Some EPA documents are available only from:
National Technical Information Service (NTIS)
5301 Shawnee Road
Alexandria, VA 22312
Ph: 703-605-6060 or 1-800-363-2068
Fax: 703-605-6880
TDD: 703-487-4639
E-mail: info@ntis.gov
Internet: https://www.ntis.gov/

U.S. FEDERAL HIGHWAY ADMINISTRATION (FHWA)
1200 New Jersey Ave., SE
Washington, DC 20590
Ph: 202-366-4000
E-mail: ExecSecretariat.FHWA@dot.gov
Internet: https://highways.dot.gov/
Order from:
Superintendent of Documents
U.S. Government Publishing Office (GPO)
732 N. Capitol Street, NW
Washington, DC 20401
Ph: 202-512-1800 or 866-512-1800
Bookstore: 202-512-0132

Internet: https://www.gpo.gov/

U.S. NATIONAL ARCHIVES AND RECORDS ADMINISTRATION (NARA)
8601 Adelphi Road
College Park, MD 20740-6001
Ph: 866-272-6272
Internet: https://www.archives.gov/
Order documents from:
Superintendent of Documents
U.S. Government Publishing Office (GPO)
732 N. Capitol Street, NW
Washington, DC 20401
Ph: 202-512-1800 or 866-512-1800
Bookstore: 202-512-0132
Internet: https://www.gpo.gov/

PART 2 PRODUCTS

Not used

PART 3 EXECUTION

Not used

-- End of Section --

P2# 519087 - DSSC DLA Repair Building 27
Columbus, OH

SECTION 01 45 00.15 10

RESIDENT MANAGEMENT SYSTEM CONTRACTOR MODE (RMS CM)
11/23

PART 1 GENERAL

1.1 REFERENCES

The publications listed below form a part of this section to the extent referenced. The publications are referred to within the text by the basic designation only.

U.S. ARMY CORPS OF ENGINEERS (USACE)

EM 385-1-1	(2024) Safety -- Safety and Occupational Health (SOH) Requirements

1.2 MEASUREMENT AND PAYMENT

The work of this section is not measured for payment. The Contractor is responsible for the work of this section, without any direct compensation other than the payment received for contract items.

1.3 CONTRACT ADMINISTRATION

The Government will use the Resident Management System (RMS) to assist in its monitoring and administration of this contract. The Government accesses the system using the Government Mode of RMS (RMS GM) and the Contractor accesses the system using the Contractor Mode (RMS CM). The term RMS will be used in the remainder of this section for both RMS GM and RMS CM. The joint Government-Contractor use of RMS facilitates electronic exchange of information and overall management of the contract. The Contractor accesses RMS to record, maintain, input, track, and electronically share information with the Government throughout the contract period in the following areas:

Administration
Finances
Quality Control
Submittal Monitoring
Scheduling
Closeout
Import/Export of Data

1.3.1 Correspondence and Electronic Communications

For ease and speed of communications, exchange correspondence and other documents in electronic format to the maximum extent feasible. Some documents such as correspondence, including pay requests and payrolls, may be required in paper format with original signatures. Paper documents will govern in the event of discrepancy with the electronic version. Contracting Officer will determine which documents require submission of paper copies.

1.3.2 Other Factors

Other portions of this document have a direct relationship to the

reporting accomplished through RMS. Particular attention is directed to FAR 52.236-15 Schedules for Construction Contracts; FAR 52.232-27 Prompt Payment for Construction Contracts; FAR 52.232-5 Payments Under Fixed-Priced Construction Contracts; Section 01 32 01.00 10 PROJECT SCHEDULE; Section 01 33 00 SUBMITTAL PROCEDURES; Section 01 35 26 GOVERNMENTAL SAFETY REQUIREMENTS; and Section 01 45 00 QUALITY CONTROL.

1.4 RMS SOFTWARE

RMS is a web based application. Download, install and be able to utilize the latest version of RMS within 7 calendar days of receipt of the Notice to Proceed. RMS software, user manuals, access and installation instructions, program updates and training information are available from the RMS website (https://rms.usace.army.mil). The Government and the Contractor will have different access authorities to the same contract database through RMS. The common database will be updated automatically each time a user finalizes an entry or change.

1.5 CONTRACT DATABASE - GOVERNMENT

The Government will enter the basic contract award data in RMS prior to granting the Contractor access. The Government entries into RMS will generally be related to submittal reviews, correspondence status, and Quality Assurance(QA)comments, as well as other miscellaneous administrative information.

1.6 CONTRACT DATABASE - CONTRACTOR

Contractor entries into RMS establish, maintain, and update data throughout the duration of the contract. Contractor entries generally include prime and subcontractor information, daily reports, submittals, RFI's, schedule updates and payment requests. RMS includes the ability to import attachments and export reports in many of the modules, including submittals. The Contractor responsibilities for entries in RMS typically include the following items:

1.6.1 Administration

1.6.1.1 Contractor Information

Enter all current Contractor administrative data and information into RMS within 7 calendar days of receiving access to the contract in RMS. This includes, but is not limited to, Contractor's name, address, telephone numbers, management staff, and other required items.

1.6.1.2 Subcontractor Information

Enter all missing subcontractor administrative data and information into RMS CM within seven calendar days of receiving access to the Contract in RMS or within seven calendar days of the signing of the subcontractor agreement for agreements signed at a later date. This includes name, trade, address, phone numbers, and other required information for all subcontractors. A subcontractor is listed separately for each trade to be performed.

1.6.1.3 Correspondence

Identify all Contractor correspondence to the Government with a serial number. Prefix correspondence initiated by the Contractor's site office

with "S". Prefix letters initiated by the Contractor's home (main) office with "H". Letters are numbered starting from 0001. (e.g., H-0001 or S-0001). The Government's letters to the Contractor will be prefixed with "C" or "RFP".

1.6.1.4 Equipment

Enter and maintain a current list of equipment planned for use or being used on the jobsite, including the most recent and planned equipment inspection dates in accordance with Section 01 45 00 QUALITY CONTROL.

1.6.1.5 Reports

Track the status of the project using the reports available in RMS. The value of these reports reflects the quality of the data input. These reports include but are not limited to the Progress Payment Request worksheet, Quality Control (QC) comments, Deficiency Tracking Log, Submittal Register Status, and Three-Phase Control worksheets in accordance with Sections 01 20 00 PRICE AND PAYMENT PROCEDURES, Section 01 32 01.00 10 PROJECT SCHEDULE, 01 33 00 SUBMITTAL PROCEDURES, and 01 45 00 QUALITY CONTROL.

1.6.1.6 Request For Information (RFI)

Create and track all Requests For Information (RFI) in the RMS Administration Module for Government review and response. Provide status at weekly progress meeting in accordance with Section 01 32 01.00 10 PROJECT SCHEDULE.

1.6.2 Finances

1.6.2.1 Pay Activity Data

Develop and enter a list of pay activities in conjunction with the project schedule in accordance with Section 01 32 01.00 10 PROJECT SCHEDULE. The sum of pay activities equals the total Contract amount, including modifications. Each pay activity must be assigned to a Contract Line Item Number (CLIN). The sum of the activities assigned to a CLIN equals the amount of each CLIN.

1.6.2.2 Payment Requests

Prepare all progress payment requests using RMS. Update the work completed under the Contract at least monthly, measured as percent or as specific quantities. After the update, generate a payment request and prompt payment certification using RMS. Submit the signed prompt payment certification and payment request as well as supporting data, either electronically or by hard copy.

1.6.3 Quality Control (QC)

Enter and track implementation of the 3-phase QC Control System, QC testing, transferred and installed property and warranties in RMS. Link each deficiency and QC test to a pay activity. Prepare daily reports, identify and track deficiencies, document progress of work, and support other Contractor QC requirements in RMS. Maintain all data on a daily basis. Ensure that RMS reflects all quality control methods, tests and actions contained within the Contractor Quality Control (CQC) Plan and Government review comments. Provide within seven calendar days of

Government acceptance of the CQC Plan.

1.6.3.1 Quality Control (QC) Reports

The Contractor's Quality Control (QC) Daily Report in RMS is the official report. The Contractor can use other supplemental formats to record QC data, but information from any supplemental formats are to be consolidated and entered into the RMS QC Daily Report. Any supplemental information may be entered into RMS as an attachment to the report. QC Daily Reports must be finalized and signed in RMS within 24 hours after the date covered by the report. Provide the Government a printed signed copy of the QC Daily Report, unless waived by the Contracting Officer.

1.6.3.2 Deficiency Tracking

Use the QC Daily Report Module to enter and track deficiencies. Deficiencies identified and entered into RMS by the Contractor or the Government will be sequentially numbered with a QC or QA prefix for tracking purposes. Enter each deficiency into RMS the same day that the deficiency is identified. Monitor, track and resolve all QC and QA entered deficiencies. A deficiency is not considered to be corrected until the Government indicates concurrence in RMS.

1.6.3.3 Three-Phase Control Meetings

Maintain scheduled and actual dates and times of preparatory and initial control meetings in RMS, and upload meeting minutes of the meetings. Worksheets for the three-phase control meetings are generated within RMS.

1.6.3.4 Labor and Equipment Hours

Enter labor and equipment exposure hours on a daily basis. Roll up the labor and equipment exposure data into a monthly exposure report.

1.6.3.5 Accident/Safety Reporting

Both the Contractor and the Government enter safety related comments in RMS as a deficiency. The Contractor must monitor, track and show resolution for safety issues in the QC Daily Report area of the RMS QC Module. In addition, follow all reporting requirements for accidents and incidents as required in EM 385-1-1, Section 01 35 26 GOVERNMENTAL SAFETY REQUIREMENTS and as required by any other applicable Federal, State or local agencies.

1.6.3.6 Definable Features of Work

Enter each feature of work, as defined in the approved CQC Plan, into the RMS QC Module. A feature of work may be associated with a single or multiple pay activities, however a pay activity is only to be linked to a single feature of work.

1.6.3.7 Activity Hazard Analysis

Import activity hazard analysis electronic document files into the RMS QC Module utilizing the document package manager. Prepare activity hazard analysis in accordance with Section 01 35 26 GOVERNMENT SAFETY REQUIREMENTS.

1.6.4 Submittal Management

Enter all current submittal register data and information into RMS within seven calendar days of receiving access to the Contract in RMSwithin the time frame directed by the Contracting Officer. Contractor is responsible for entering Activity Numbers for each submittal item corresponding to their Schedule. The Contractor will import the information shown in the submittal register following the specification Section 01 33 00 SUBMITTAL PROCEDURES unless otherwise directed by the Contracting Officer. Group electronic submittal documents into transmittal packages to send to the Government, except very large electronic files, samples, spare parts, mock ups, color boards, or where hard copies are specifically required. Track transmittals and update the submittal register in RMS on a daily basis throughout the duration of the Contract. Submit hard copies of all submittals unless waived by the Contracting Officer.

Contractor may request submittals to be added to RMS throughout the lifecycle of the project. Approval/disapproval of Contractor requests is at the discretion of the Contracting Officer. Submittals entry into RMS must be updated daily or as practical for performance of the Contract, as approved by the Contracting Officer.

1.6.5 Schedule

Enter and update the contract project schedule in RMS by either manually entering all schedule data or by importing the Standard Data Exchange Format (SDEF) file, based on the requirements in Section 01 32 01.00 10 PROJECT SCHEDULE.

1.6.6 Closeout

Closeout documents, processes and forms are managed and tracked in RMS by both the Contractor and the Government. Ensure that all closeout documents are entered, completed and documented within RMS.

1.7 IMPLEMENTATION

Use of RMS as described in the preceding paragraphs is mandatory. Ensure that sufficient resources are available to maintain contract data within the RMS system. RMS is an integral part of the Contractor's required management of quality control.

1.8 NOTIFICATION OF NONCOMPLIANCE

Take corrective action within seven calendar days after receipt of notice of RMS non-compliance by the Contracting Officer.

PART 2 PRODUCTS

Not Used

PART 3 EXECUTION

Not Used

-- End of Section --

P2# 519087 - DSSC DLA Repair Building 27
Columbus, OH

SECTION 01 45 04.10 06

CONTRACTOR QUALITY CONTROL
05/25

PART 1 GENERAL

1.1 REFERENCES

The publications listed below form a part of this specification to the extent referenced. The publications are referred to in the text by basic designation only.

ASTM INTERNATIONAL (ASTM)

ASTM D3740	(2019) Minimum Requirements for Agencies Engaged in the Testing and/or Inspection of Soil and Rock as Used in Engineering Design and Construction
ASTM E329	(2018) Standard Specification for Agencies Engaged in Construction Inspection, Testing, or Special Inspection

1.2 PAYMENT

Separate payment will not be made for providing and maintaining an effective Quality Control program, and all costs associated therewith shall be included in the applicable unit prices or lump-sum prices contained in the Bidding Schedule.

1.3 SUBMITTALS

Government approval/acceptance is required for submittals with a "G" designation; submittals not having a "G" designation are for Contractor Quality Control approval, or for information only. When used, a designation following the "G" designation identifies the office that will review the submittal for the Government. The following shall be submitted in accordance with LRL Section 01 33 00.00 06 SUBMITTAL PROCEDURES:

SD-01 Preconstruction Submittals

Construction Quality Control Plan; G, RO

PART 2 PRODUCTS (Not Applicable)

PART 3 EXECUTION

3.1 GENERAL REQUIREMENTS

The Contractor is responsible for quality control and shall establish and maintain an effective quality control system in compliance with FAR 52.246-12 - Inspection of Construction. The quality control system shall consist of plans, procedures, and organization necessary to produce an end product which complies with the contract requirements. The system shall cover all design and construction operations, both onsite and offsite, and shall be keyed to the proposed construction sequence. The site project

superintendent will be held responsible for the quality of work on the job and is subject to removal by the Contracting Officer for non-compliance with the quality requirements specified in the contract. The site project superintendent in this context shall be the highest level manager responsible for the overall construction activities at the site, including quality and production. The site project superintendent shall maintain a physical presence at the site at all times, except as otherwise acceptable to the Contracting Officer, and shall be responsible for all construction and construction related activities at the site.

3.2 NOT USED

3.3 CONSTRUCTION QUALITY CONTROL PLAN (CQCP)

The Contractor shall furnish for review by the Government, not later than thirty (30) days after receipt of notice to proceed, the Contractor Construction Quality Control (CQC) Plan proposed to implement the requirements of FAR 52.246-12 - Inspection of Construction. The plan shall identify personnel, procedures, control, instructions, tests, records, and forms to be used. The Government will consider an interim plan for the first thirty (30) days of operation. Construction will be permitted to begin only after acceptance of the CQC Plan or acceptance of an interim plan applicable to the particular feature of work to be started. Work outside of the features of work included in an accepted interim plan will not be permitted to begin until acceptance of a CQC Plan or another interim plan containing the additional features of work to be started.

3.3.1 Content of the CQC Plan

The CQC Plan shall include, as a minimum, the following to cover all construction operations, both onsite and offsite, including work by subcontractors, fabricators, suppliers, and purchasing agents:

a. A description of the quality control organization, including a chart showing lines of authority and acknowledgment that the CQC staff shall implement the three phase control system for all aspects of the work specified. The staff shall include a CQC System Manager who shall report to someone higher in the Contractor's organization than the project superintendent, shall not be the superintendent.

b. The name, qualifications (in resume format), duties, responsibilities, and authorities of each person assigned a CQC function.

c. A copy of the letter to the CQC System Manager signed by an authorized official of the firm which describes the responsibilities and delegates sufficient authorities to adequately perform the functions of the CQC System Manager, including authority to stop work which is not in compliance with the contract. The CQC System Manager shall issue letters of direction to all other various quality control representatives outlining duties, authorities, and responsibilities. Copies of these letters shall also be furnished to the Government.

d. Procedures for scheduling, reviewing, certifying, and managing submittals, including those of subcontractors, offsite fabricators, suppliers, and purchasing agents. These procedures

shall be in accordance with LRL Section 01 33 00.00 06 SUBMITTAL PROCEDURES.

e. Control, verification, and acceptance testing procedures for each specific test to include the test name, specification paragraph requiring test, feature of work to be tested, test frequency, and person responsible for each test. (Laboratory facilities will be approved by the Contracting Officer.)

f. Procedures for tracking preparatory, initial, and follow-up control phases and control, verification, and acceptance tests including documentation.

g. Procedures for tracking construction deficiencies from identification through acceptable corrective action. These procedures shall establish verification that identified deficiencies have been corrected.

h. Reporting procedures, including proposed reporting formats.

i. A list of the definable features of work. A definable feature of work is a task which is separate and distinct from other tasks, has separate control requirements, and may be identified by different trades or disciplines, or it may be work by the same trade in a different environment. Although each section of the specifications may generally be considered as a definable feature of work, there are frequently more than one definable features under a particular section. This list will be agreed upon during the coordination meeting.

3.3.2 Acceptance of Plan

Acceptance of the Contractor's plan is required prior to the start of construction. Acceptance is conditional and will be predicated on satisfactory performance during the construction. The Government reserves the right to require the Contractor to make changes in his CQC Plan and operations including removal of personnel, as necessary, to obtain the quality specified.

3.3.3 Notification of Changes

After acceptance of the CQC Plan, the Contractor shall notify the Contracting Officer in writing of any proposed change. Proposed changes are subject to acceptance by the Contracting Officer.

3.4 COORDINATION MEETING

After the Preconstruction Conference, before start of construction, and prior to acceptance by the Government of the CQC Plan, the Contractor shall meet with the Contracting Officer or Authorized Representative and discuss the Contractor's quality control system. The CQC Plan shall be submitted for review a minimum of thirty (30) calendar days prior to the Coordination Meeting. During the meeting, a mutual understanding of the system details shall be developed, including the forms for recording the CQC operations, control activities, testing, administration of the system for both onsite and offsite work, and the interrelationship of Contractor's Management and control with the Government's Quality Assurance. Minutes of the meeting shall be prepared by the Government and signed by both the Contractor and the Contracting Officer. The minutes

shall become a part of the contract file. There may be occasions when subsequent conferences will be called by either party to reconfirm mutual understandings and/or address deficiencies in the CQC system or procedures which may require corrective action by the Contractor.

3.4.1 Subcontractor CQC Orientation

Before a Subcontractor begins work on the jobsite, the CQC System Manager will train the Subcontractor and answer any questions pertaining to quality control operations. This requirement is waived only if a Subcontractor attended the initial coordination meeting described above. A record of the orientation shall be documented in the QC Report.

3.5 CONSTRUCTION QUALITY CONTROL ORGANIZATION

3.5.1 Personnel Requirements

a. The requirements for the CQC organization are a CQC System Manager and sufficient number of additional qualified personnel to ensure safety and contract compliance. A Site Safety Health Officer (SSHO) will be required for this contract. See LRL Section 01 35 26.00 06 GOVERNMENT SAFETY REQUIREMENTS for the SSHO qualifications and duties.

b. Personnel identified in the technical provisions as requiring specialized skills to assure the required work is being performed properly will also be included as part of the CQC organization. The Contractor's CQC staff shall maintain a presence at the site at all times during progress of the work and have complete authority and responsibility to take any action necessary to ensure contract compliance. The CQC staff shall be subject to acceptance by the Contracting Officer. The Contractor shall provide adequate office space, filing systems and other resources as necessary to maintain an effective and fully functional CQC, and safety/health organization. Complete records of all letters, material submittals, shop drawing submittals, schedules and all other project documentation shall be promptly furnished to the CQC organization by the Contractor. The CQC organization shall be responsible to maintain these documents and records at the site at all times and made available to the SSHO, except as otherwise acceptable to the Contracting Officer.

3.5.2 CQC System Manager Qualifications and Duties

a. The Contractor shall identify as CQC System Manager an individual within the onsite work organization who shall be responsible for overall management of CQC and have the authority to act in all CQC matters for the Contractor. The CQC System Manager shall be a graduate engineergraduate architect, or a graduate of construction management, with a minimum of 5 years construction experience on construction similar to this contract, or a construction person with a minimum of 10 years in related quality management work.

b. This CQC System Manager shall be employed by the Prime Contractor and be on the site at all times during construction. Alternate(s) for the CQC System Manager shall be identified in the CQC Plan to serve in the event of the CQC System Manager's absence. The requirements for the alternates shall be the same as for the designated CQC System Manager.

c. The CQC System Manager shall be:

assigned no other duties except being the CQC System Manager. Shall

not be the SSHO or the superintendent.

3.5.3 CQC Personnel

b. In addition to CQC personnel specified elsewhere in the contract, the Contractor shall provide as part of the CQC organization specialized personnel to assist the CQC System Manager for the following areas identified per Experience Matrix Table. These individuals may be employees of the prime or subcontractor. These individuals identified per the Experience Matrix Table, shall be responsible to the CQC System Manager; be physically present at the construction site during work on their areas of responsibility; have the necessary education and/or experience in accordance with the experience matrix listed herein. These individuals in the Experience Matrix Table may perform other duties but must be allowed sufficient time to perform their assigned quality control duties as described in the Quality Control Plan. The QCM or the Superintendent will not be permitted to act as an Additional QC Person on this project for any reason.

c. The word "graduate" below indicates an individual possessing a four-year college degree accredited in the respective field listed-with experience obtained following graduation in the type of work being performed on the project.

Experience Matrix Table

	AREA	QUALIFICATIONS
a.	Mechanical	Graduate Mechanical Engineer with 5 yrs related experience or person with 10 yrs related experience. This person can be an employee of the Prime Contractor or Sub Contractor.
b.	Electrical	Graduate Electrical Engineer with 5 yrs related experience or person with 10 yrs related experience. This person can be an employee of the Prime Contractor or Sub Contractor.

	AREA	QUALIFICATIONS
c.	Concrete, Pavements and Soils	Civil Engineer identified in item B or C above, and supplemented with the Corps validated QC testing laboratory
d.	Fire Protection	See paragraph FIRE Protection QC Specialist

	AREA	QUALIFICATIONS
e.	Commissioning Coordinator	Responsible to ensure and assist all trades. Ensure completion of all phases of work required for the Commissioning process. This person must be an employee of the Commissioning Contractor and must have direct communication with the Contracting Officer's Representative regarding all elements of the commissioning process. The Commissioning Coordinator must have a minimum of 5 years experience in mechanical and/or Building Automation.

3.5.3.1 Not Used

3.5.3.2 Fire Protection QC Specialist

Provide a Fire Protection Quality Control Specialist (FPQC) within the QC organization to perform quality control related activities as specified herein on fire protection and life safety systems installed under this Contract.

3.5.3.2.1 FPQC Qualifications

The FPQC must have the following qualifications:

a. Be a registered Professional Engineer (P.E.) licensed by a Licensing Board in the United States, the District of Columbia, Guam or Puerto Rico, having passed the National Council of Examiners for Engineering and Surveying (NCEES) examination specifically in the discipline of Fire Protection Engineering.

b. Have a minimum of 5 years of Fire Protection Engineering experience on projects of similar relevance and complexity to the fire protection work specified under this Contract.
c. Be employed by an independent engineering firm or company . The firm may identify multiple, to a maximum of five, licensed Fire Protection Engineers for the performance of the duties under this Contract but must submit the names and qualifications for Government approval for all individuals identified prior to them performing any work under this Contract. These individuals may not be substituted without prior approval from the Contracting Officer.

3.5.3.2.2 Responsibilities

FPQC duties and responsibilities:

a. Assist in the development of the QC Plan including the Testing Plan and Log and executing the three phases of control for work involving the installation and testing of fire protection and life safety systems as an extension of the QC Manager.

b. Participate in project QC Meetings. Participate in Preparatory and Initial Phase meetings and perform and Follow-up inspections for work involving the installation and testing of fire protection and life safety systems.

c. Review and certify that all submittals pertaining to fire protection and life safety systems are complete and accurate prior to submission to the Government approval. The FPQC Specialist is responsible for ensuring submittals are complete and accurate and all corrections have been made prior to submission to the Government. The Government reserves the right to reject any submittal that has not first been reviewed and certified by the FPQC and so marked, in writing, attesting to such review and completeness of the submittal.

d. The Government reserves the right to reject any submittal or construction that is not in compliance to Contract. Government reviews do not relieve the Contractor responsibility for providing adequate quality control measures and do not constitute or imply acceptance of Contract variation. e. Perform construction surveillance in accordance with the Schedule of Fire Protection System Inspections. Construction surveillance includes but is not limited to performing periodic on-site inspections during construction at specified milestones, performing a pre-final inspection of installed systems and witnessing functional testing; and participating and documenting in an on-site final acceptance inspection of fire protection and life safety systems with the Government FPE.

e. Perform construction surveillance. Construction surveillance includes but is not limited to performing periodic on-site inspections during construction at specified milestones, performing a pre-final inspection of installed systems and witnessing functional testing; and participating and documenting in an on-site final acceptance inspection of fire protection and life safety systems with the Government FPE.

f. Document inspection results on a FPQC report prepared each day inspections are performed. The report must include a description of the visual inspection or observation performed, a written summary of findings, a conclusion on compliance with the Contract documents, and signature of the FPQC Specialist. In person inspection must be documented to include video (.mp4)photo (.jpeg) or both. Forward the FPQC daily report to the QC Manager who must include the report with the submission of their daily QC Report to the Government each day. Every site visit by the FPQC must be documented on a FPQC daily report.

3.5.4 Additional Requirements

In addition to the above experience and/or education requirements the CQC System Manager and Alternate(s) shall have completed and passed the course entitled "Construction Quality Management For Contractors" within the last

5 years. A copy of the certification shall be provided with the CQCP. This course is periodically offered by the Associated Builders and Constructors, Inc., or Associated General Contractor, Inc., and the U.S. Army Corps of Engineers.

3.5.5 Organizational Changes

The Contractor shall maintain the CQC staff at full strength at all times. When it is necessary to make changes to the CQC staff, the Contractor shall revise the CQC Plan to reflect the changes and submit the changes to the Contracting Officer for acceptance.

3.6 SUBMITTALS AND DELIVERABLES

Submittals, if needed, shall be made as specified in LRL Section 01 33 00 SUBMITTAL PROCEDURES. The CQC organization shall be responsible for certifying that all submittals and deliverables are in compliance with the contract requirements. When LRL Section 01 91 00.15 TOTAL BUILDING COMMISSIONING is included in the contract, the submittals required by those sections shall be coordinated with LRL Section 01 33 00 SUBMITTAL PROCEDURES to ensure adequate time is allowed for each type of submittal required.

3.7 CONTROL

Contractor Quality Control is the means by which the Contractor ensures that the construction, to include that of subcontractors and suppliers, complies with the requirements of the contract. At least three phases of control shall be conducted by the CQC System Manager for each definable feature of work as follows:

3.7.1 Preparatory Phase

This phase shall be performed prior to beginning work on each definable feature of work, after all required plans/documents/materials are approved/accepted, and after copies are at the work site. This phase shall include:

a. A review of each paragraph of applicable specifications, reference codes, and standards. A copy of those sections of referenced codes and standards applicable to that portion of the work to be accomplished in the field shall be made available by the Contractor at the preparatory inspection. These copies shall be maintained in the field and available for use by Government personnel until final acceptance of the work.

b. A review of the contract drawings.

c. A check to assure that all materials and/or equipment have been tested, submitted, and approved.

d. Examination of the work area to assure that all required preliminary work has been completed and is in compliance with the contract.

e. A physical examination of required materials, equipment, and sample work to assure that they are on hand, conform to approved shop drawings or submitted data, and are properly stored.

f. A review of the appropriate activity hazard analysis to assure safety requirements are met.

g. Discussion of procedures for controlling quality of the work including repetitive deficiencies. Document construction tolerances and workmanship standards for that feature of work.

h. A check to ensure that the portion of the plan for the work to be performed has been accepted by the Contracting Officer.

i. Resolve all differences.

j. Discussion of the initial control phase.

k. Review of provisions that have been made to provide required control inspection and testing.

l. Review of the CQC plan, specifically its organization chart and delegation letters. Insure all required members of the CQC organization for this feature of work are qualified, have been appointed, accepted and have requisite authority delegated.

m. The Government shall be notified at least 72 hours in advance of beginning the preparatory control phase. This phase shall include a meeting conducted by the CQC System Manager and attended by the superintendent, other CQC personnel (as applicable), and the foreman responsible for the definable feature. The results of the preparatory phase actions shall be documented by separate minutes prepared by the CQC System Manager and attached to the daily CQC report. The Contractor shall instruct applicable workers as to the acceptable level of workmanship required in order to meet contract specifications.

n. Review of special inspections required by SECTION 01 45 35 Special Inspections, the statement of special inspections, and the schedule of special inspections.

3.7.2 Initial Phase

This phase shall be accomplished at the beginning of a definable feature of work. The following shall be accomplished:

a. A check of work to ensure that it is in full compliance with contract requirements. Review minutes of the preparatory meeting.

b. Verify adequacy of controls to ensure full contract compliance. Verify required control inspection and testing.

c. Establish level of workmanship and verify that it meets minimum acceptable workmanship standards. Compare with required sample panels as appropriate.

d. Resolve all differences.

e. Check safety to include compliance with and upgrading of the safety plan and activity hazard analysis. Review the activity analysis with each worker.

f. The Government shall be notified at least 72 hours in advance of

beginning the initial phase. Separate minutes of this phase shall be prepared by the CQC System Manager and attached to the daily CQC report. Exact location of initial phase shall be indicated for future reference and comparison with follow-up phases.

g. The initial phase should be repeated for each new crew to work onsite, or any time acceptable specified quality standards are not being met.

h. Coordinate scheduled work with special inspections required by SECTION 01 45 35 Special Inspections, the statement of special inspections, and the schedule of special inspections.

3.7.3 Follow-up Phase

Daily checks shall be performed to assure control activities, including control testing, are providing continued compliance with contract requirements, until completion of the particular feature of work. The checks shall be made a matter of record in the CQC documentation. Final follow-up checks shall be conducted and all deficiencies corrected prior to the start of additional features of work which may be affected by the deficient work. The Contractor shall not build upon nor conceal non-conforming work.

3.7.4 Additional Preparatory and Initial Phases

Additional preparatory and initial phases shall be conducted on the same definable features of work if: the quality of on-going work is unacceptable; if there are changes in the applicable CQC staff, onsite production supervision or work crew; if work on a definable feature is resumed after a substantial period of inactivity; or if other problems develop.

3.8 TESTS

3.8.1 Testing Procedure

The Contractor shall perform specified or required tests to verify that control measures are adequate to provide a product which conforms to contract requirements. Upon request, the Contractor shall furnish to the Government duplicate samples of test specimens for possible testing by the Government. Testing includes operation and/or acceptance tests when specified. For QC testing of construction materials including soil, rock, aggregate, asphalt, concrete, and steel, the Contractor shall procure the services of a Corps of Engineers (COE) validated testing laboratory or establish a COE validated testing laboratory at the project site. Technical specifications included in the contract that require materials testing by an approved commercial testing laboratory shall be intended to mean by a COE validated laboratory. The Contractor shall perform the following activities and record and provide the following data:

a. Verify that testing procedures comply with contract requirements.

b. Verify that facilities and testing equipment are available and comply with testing standards.

c. Check test instrument calibration data against certified standards.

d. Verify that recording forms and test identification control number

system, including all of the test documentation requirements, have been prepared.

e. Results of all tests taken, both passing and failing tests, shall be recorded on the CQC report for the date taken. Specification paragraph reference, location where tests were taken, and the sequential control number identifying the test shall be given. If approved by the Contracting Officer, actual test reports may be submitted later with a reference to the test number and date taken. An information copy of tests performed by an offsite or commercial test facility shall be provided directly to the Contracting Officer. Failure to submit timely test reports as stated may result in nonpayment for related work performed and disapproval of the test facility for this contract.

3.8.2 Testing Laboratories

3.8.2.1 Capability Check

The Government reserves the right to check laboratory equipment in the proposed laboratory for compliance with the standards set forth in the contract specifications and to check the laboratory technician's testing procedures and techniques. Laboratories utilized for testing soils, concrete, asphalt, and steel shall meet criteria detailed in ASTM D3740 and ASTM E329.

3.8.2.2 Capability Recheck

If the selected laboratory fails the capability check, the Contractor will be assessed a charge of $1,375.00 to reimburse the Government for each succeeding recheck of the laboratory or the checking of a subsequently selected laboratory. Such costs will be deducted from the contract amount due the Contractor.

3.8.3 Onsite Laboratory

The Government reserves the right to utilize the Contractor's control testing laboratory and equipment to make assurance tests, and to check the Contractor's testing procedures, techniques, and test results at no additional cost to the Government.

3.8.4 Furnishing or Transportation of Samples for Testing

Costs incidental to the transportation of samples or materials shall be borne by the Contractor. Samples of materials for test verification and acceptance testing by the Government shall be delivered to the Corps of Engineers Division Laboratory, f.o.b., at the following address:

For delivery by mail:

Geotechnical & Structures Laboratory
Material Testing Center (GS-E)
U.S. Army Engineer Research and Development Center
3909 Halls Ferry Road
Vicksburg, MS 39180-6199

Coordination for each specific test, exact delivery location, and dates will be made through the Area Office.

3.9 COMPLETION INSPECTION

3.9.1 Punch-Out Inspection

Near the end of the work, or any increment of the work established by a time stated in the FAR 52.211-10 - Commencement, Prosecution, and Completion of Work, or by the specifications, the CQC System Manager shall conduct an inspection of the work. A punch list of items which do not conform to the approved drawings and specifications shall be prepared and included in the CQC documentation, as required by paragraph DOCUMENTATION. The list of deficiencies shall include the estimated date by which the deficiencies will be corrected. The CQC System Manager or staff shall make a second inspection to ascertain that all deficiencies have been corrected. Once this is accomplished, the Contractor shall notify the Government that the facility is ready for the Government Pre-Final inspection.

3.9.2 Pre-Final Inspection

The Government will perform the pre-final inspection to verify that the facility is complete and ready to be occupied. A Government Pre-Final Punch List may be developed as a result of this inspection. The Contractor's CQC System Manager shall ensure that all items on this list have been corrected before notifying the Government, so that a Final inspection with the customer can be scheduled. Any items noted on the Pre-Final inspection shall be corrected in a timely manner. These inspections and any deficiency corrections required by this paragraph shall be accomplished within the time slated for completion of the entire work or any particular increment of the work if the project is divided into increments by separate completion dates.

3.9.3 Final Acceptance Inspection

The Contractor's Quality Control Inspection personnel, plus the superintendent or other primary management person, and the Contracting Officer's Representative shall be in attendance at the final acceptance inspection. Additional Government personnel including, but not limited to, those from Base/Post Civil Facility Engineer user groups, and major commands may also be in attendance. The final acceptance inspection will be formally scheduled by the Contracting Officer based upon results of the Pre-Final inspection. Notice shall be given to the Contracting Officer at least fourteen (14) days prior to the final acceptance inspection and shall include the Contractor's assurance that all specific items previously identified to the Contractor as being unacceptable, along with all remaining work performed under the contract, will be complete and acceptable by the date scheduled for the final acceptance inspection. Failure of the Contractor to have all contract work acceptably complete for this inspection will be cause for the Contracting Officer to bill the Contractor for the Government's additional inspection cost in accordance with FAR 52.246-12 - Inspection of Construction.

3.10 DOCUMENTATION

The Contractor shall maintain current records providing factual evidence that required quality control activities and/or tests have been performed. These records shall include the work of subcontractors and suppliers and shall be on an acceptable form that includes, as a minimum, the following information:

a. Contractor/subcontractor and their area of responsibility.

b. Operating plant/equipment with hours worked, idle, or down for repair.

c. Work performed each day, giving location, description, and by whom. When Network Analysis (NAS) is used, identify each phase of work performed each day by NAS activity number.

d. Test and/or control activities performed with results and references to specifications/drawings requirements. The control phase shall be identified (Preparatory, Initial, Follow-up). List of deficiencies noted, along with corrective action.

e. Quantity of materials received at the site with statement as to acceptability, storage, and reference to specifications/drawings requirements.

f. Submittals and deliverables reviewed, with contract reference, by whom, and action taken.

g. Offsite surveillance activities, including actions taken.

h. Job safety evaluations stating what was checked, results, and instructions or corrective actions.

i. Instructions given/received and conflicts in plans and/or specifications.

j. Contractor's verification statement.

k. These records shall indicate a description of trades working on the project; the number of personnel working; weather conditions encountered; and any delays encountered. These records shall cover both conforming and deficient features and shall include a statement that equipment and materials incorporated in the work and workmanship comply with the contract. The original and one copy of these records in report form shall be furnished to the Government daily within 24 hours after the date covered by the report. All calendar days shall be accounted for throughout the life of the contract. Reports shall be signed and dated by the CQC System Manager. The report from the CQC System Manager shall include copies of test reports and copies of reports prepared by all subordinate quality control personnel.

l. Deficiency Tracking System. The Contractor shall maintain a cumulative list of deficiencies identified for the duration of the project. Deficiencies to be listed include those failures, Government oral observations and Notifications of Noncompliance. The list shall be maintained at the project site. Copies of updated listings shall be submitted to the Government at least every thirty (30) days.

3.11 NOTIFICATION OF NONCOMPLIANCE

The Contracting Officer will notify the Contractor of any detected noncompliance with the foregoing requirements. The Contractor shall take immediate corrective action after receipt of such notice. Such notice, when delivered to the Contractor at the work site, shall be deemed

sufficient for the purpose of notification. If the Contractor fails or refuses to comply promptly, the Contracting Officer may issue an order stopping all or part of the work until satisfactory corrective action has been taken. No part of the time lost due to such stop orders shall be made the subject of claim for extension of time or for excess costs or damages by the Contractor.

-- End of Section --

P2# 519087 - DSSC DLA Repair Building 27
Columbus, OH

SECTION 01 45 35

SPECIAL INSPECTIONS
05/24

PART 1 GENERAL

1.1 REFERENCES

The publications listed below form a part of this specification to the extent referenced. The publications are referred to within the text by the basic designation only.

AMERICAN SOCIETY OF CIVIL ENGINEERS (ASCE)

ASCE 7-22	(2022; Supp 1 2023; Supp 2 2023; Supp 3 2025) Minimum Design Loads and Associated Criteria for Buildings and Other Structures

INTERNATIONAL CODE COUNCIL (ICC)

ICC IBC	(2024) International Building Code

U.S. DEPARTMENT OF DEFENSE (DOD)

UFC 3-301-01	(2023; with Change 4, 2025) Structural Engineering

1.2 GENERAL REQUIREMENTS

Perform Special Inspections in accordance with the Statement of Special Inspections, Schedule of Special Inspections, Chapter 17 of ICC IBC, and UFC 3-301-01. The Statement of Special Inspections and Schedule of Special Inspections are included as an attachment to this specification. Special Inspections are to be performed by an independent third party and are intended to ensure that the work of the Prime Contractor is in accordance with the Contract Documents and applicable building codes. Special inspections do not take the place of the three phases of control inspections performed by the Contractor's QC Manager or any testing and inspections required by other sections of the specifications.

1.3 DEFINITIONS

1.3.1 Continuous Special Inspections

Continuous Special Inspections is the constant monitoring of specific tasks by a special inspector. These inspections must be carried out continuously over the duration of the particular tasks.

1.3.2 Perform

Perform these tasks for each weld, fastener or bolted connection, and noted required verification.

1.3.3 Observe

Observe these items randomly during the course of each work day to insure that applicable requirements are being met. Observe these Special

Inspections items on a periodic daily basis. Operations need not be delayed pending these inspections.

1.3.4 Special Inspector (SI)

A qualified person retained by the Contractor and approved by the Contracting Officer as having the competence necessary to inspect a particular type of construction requiring Special Inspections. The SI must be an independent third party hired directly by the Prime Contractor.

1.3.5 Associate Special Inspector (ASI)

A qualified person who assists the SI in performing Special Inspections but who must perform inspection under the direct supervision of the SI and who cannot perform inspections without the SI on site.

1.3.6 Third Party

A Special inspector must not be an employee of the Contractor or of any Sub-Contractor performing the work to be inspected.

1.3.7 Special Inspector of Record (SIOR)

A licensed professional engineer in responsible charge of supervision of all special inspectors for the project and approved by the Contracting Officer. The SIOR must be an independent third-party entity hired directly by the Prime Contractor.

1.3.8 Contracting Officer

The Government official having overall authority for administrative contracting actions. Certain contracting actions may be delegated to the Contracting Officer's Representative (COR).

1.3.9 Quality Control (QC) Manager

An individual retained by the Prime Contractor and qualified in accordance with the Section 01 45 00 QUALITY CONTROL having the overall responsibility for the Contractor's QC organization.

1.3.10 Structural Engineer of Record (SER)

A registered design professional contracted by the Government as an A/E retained by the Prime Contractor responsible for the overall design and review of submittal documents prepared by others. The SER is registered or licensed to practice their respective design profession as defined by the statutory requirements of the professional registration laws in the state in which the design professional works. The SER is also referred to as the Engineer of Record (EOR) in design documents.

1.3.11 Statement of Special Inspections (SSI)

A document developed by the SER identifying the materials, systems, components and work required to have Special Inspections. This statement is included at the end of this specification.

1.3.12 Schedule of Special Inspections (SSI)

A schedule which lists each of the required Special Inspections, the

extent to which each Special Inspection is to be performed, and the required frequency for each in accordance with ICC IBC Chapter 17. This schedule is included at the end of this specification.

1.3.13 Designated Seismic Systems (DSS)

Those nonstructural components that require design in accordance with ASCE 7-22 Chapter 13 and for which the component importance factor, Ip, is greater than 1.0. This designation applies to systems that are required to be operational following the Design Earthquake for RC I - IV structures and following the MCER for RC V structures. All systems in RC V facilities designated as MC-1 in accordance with UFC 3-301-02 are considered part of the Designated Seismic Systems.

1.3.14 Definable Feature of Work (DFOW)

An inspection group that is separate and distinct from other inspection groups, having inspection requirements or inspectors that are unique.

1.4 SUBMITTALS

Government approval is required for submittals with a "G" or "S" classification. Submittals not having a "G" or "S" classification are for Contractor Quality Control approval. Submittals not having a "G" or "S" classification are for information only. When used, a code following the "G" classification identifies the office that will review the submittal for the Government. Submit the following in accordance with Section 01 33 00 SUBMITTAL PROCEDURES:

SD-01 Preconstruction Submittals

SIOR Letter of Acceptance; G,

Special Inspections Project Manual; G,

Special Inspections Agency's Written NDT Practices with method and evidence of regular equipment calibration where applicable

SD-06 Test Reports

Special Inspection Daily Reports

Special Inspection Biweekly Reports

SD-07 Certificates

AISC Certified Steel Fabricator

Special Inspector of Record Qualifications; G,

Special Inspector Qualifications; G,

Qualification Records for Nondestructive Testing Technicians

SD-11 Closeout Submittals

Interim Report of Special Inspections from each DFOW; G,

Comprehensive Final Report of Special Inspections; G,

Final Report of Structural Observations where required; G,

1.5 SPECIAL INSPECTOR QUALIFICATIONS

Submit qualifications for each special inspector and the special inspector of record according to the following certification requirements. The Government will consider alternate equivalent certification upon request. Without written acceptance deviations to the following qualifications are not approved.

1.5.1 NOT USED

1.5.1.1 NOT USED

1.5.1.2 NOT USED

1.5.2 Welding Structural Steel

1.5.2.1 Special Inspector

a. ICC Structural Welding Special Inspector certificate with one year of related experience, or

b. AWS Certified Welding Inspector

1.5.2.2 Associate Special Inspector

AWS Certified Associate Welding Inspector

1.5.3 Nondestructive Testing of Welds

1.5.3.1 Special Inspector

NDT Level III Certificate

1.5.3.2 Associate Special Inspector

NDT Level II Certificate plus one year of related experience

1.5.4 NOT USED

1.5.4.1 NOT USED

1.5.4.2 NOT USED

1.5.5 Concrete Construction

1.5.5.1 Special Inspector

a. ICC Reinforced Concrete Special Inspector Certificate with one year of related experience, or

b. ACI Concrete Construction Special Inspector, or

c. Registered Professional Engineer with 3 years of related experience

1.5.5.2 Associate Special Inspector

a. ACI Concrete Construction Special Inspector-in-Training, or

b. Engineer-In-Training with one year of related experience

1.5.6 NOT USED

1.5.6.1 NOT USED

1.5.6.2 NOT USED

1.5.7 NOT USED

1.5.7.1 NOT USED

1.5.7.2 NOT USED

1.5.8 Masonry Construction

1.5.8.1 Special Inspector

a. ICC Structural Masonry Special Inspector Certificate with one year of related experience, or

b. Registered Professional Engineer with 3 years of related experience

1.5.8.2 Associate Special Inspector

Engineer-In-Training with one year of related experience.

1.5.9 NOT USED

1.5.9.1 NOT USED

1.5.9.2 NOT USED

1.5.10 NOT USED

1.5.10.1 NOT USED

1.5.10.2 NOT USED

1.5.11 NOT USED

1.5.11.1 NOT USED

1.5.11.2 NOT USED

1.5.12 NOT USED

1.5.12.1 NOT USED

1.5.12.2 NOT USED

1.5.13 NOT USED

1.5.13.1 NOT USED

1.5.13.2 NOT USED

1.5.14 Exterior Insulation and Finish System (EIFS)

1.5.14.1 Special Inspector

a. Association of the Wall and Ceiling Industry (AWCI) EIFS Inspector Certificate, or

b. Exterior Design Institute Certificate, or

c. Registered Professional Engineer or Architect with related experience

1.5.14.2 Associate Special Inspector

Engineer-In-Training with one year of related experience.

1.5.15 NOT USED

1.5.15.1 NOPT USED

1.5.15.2 NOT USED

1.5.16 NOT USED

1.5.16.1 NOT USED

1.5.16.2 NOT USED

PART 2 PRODUCTS

2.1 NOT USED

PART 3 EXECUTION

3.1 RESPONSIBILITIES

3.1.1 Special Inspector of Record

a. Supervise all Special Inspectors required by the Contract Documents and the IBC.

b. Submit an SIOR Letter of Acceptance to the Contracting Officer attesting to acceptance of the duties of SIOR, signed and sealed by the SIOR.

c. Verify the qualifications of all of the Special Inspectors.

d. Verify the qualifications of fabricators.

e. Submit Special Inspection agency's written NDT practices for the monitoring and control of the agency's operations to include the following:

(1) The agency's procedures for the selection and administration of inspection personnel, describing the training, experience and examination requirements for qualification and certification of inspection personnel.

(2) The agency's inspection procedures, including general inspection, material controls, and visual welding inspection.

f. Submit Qualification Records for Nondestructive Testing Technicians for nondestructive testing (NDT) technicians designated for the project.

g. Submit NDT procedures and equipment calibration records for NDT to be

performed and equipment to be used for the project.

h. Prepare a Special Inspections Project Manual, which must cover the following:

(1) Roles and responsibilities of the following individuals during Special Inspections: SIOR, SI, ASI, General Contractor's QC Manager and SER.

(2) Organizational chart or communication plan, indicating lines of communication.

(3) Contractor's internal plan for scheduling inspections. Address items such as timeliness of inspection requests, whom to contact for inspection requests, and availability of alternate inspectors.

(4) Indicate the Government reporting requirements.

(5) Propose forms or templates to be used by SI and SIOR to document inspections.

(6) Indicate procedures for tracking nonconforming work and verification that corrective work is complete.

(7) Indicate how the SIOR and SI will participate in weekly QC meetings.

(8) NOT USED

(9) Include a section in the manual that covers each specific item requiring Special Inspections that is indicated on the Schedule of Special Inspections. Provide names and qualifications of each special inspector who will be performing the Special Inspections for each specific item. Provide details on how the Special Inspections are to be carried out for each item so that the expectations are clear for the General Contractor and the Subcontractor performing the work.

Make a copy of the Special Inspections Project Manual available on the job site during construction. Submit a copy of the Special Inspections Project Manual for approval.

i. Attend coordination and mutual understanding meeting where the information in the Special Inspections Project Manual will be reviewed to verify that all parties have a clear understanding of the Special Inspection provisions and the individual duties and responsibilities of each party.

j. Maintain a 3-ring binder for the Special Inspector's daily and special inspection biweekly reports and the Special Inspections Project Manual. This binder must be located in a conspicuous place in the project trailer/office to allow review by the Contracting Officer and the SER.

k. Submit a copy of the Special Inspector's special inspection daily reports to the QC Manager.

l. Discrepancies that are observed during Special Inspections must be reported to the QC Manager for correction. If discrepancies are not

corrected before the Special Inspector leaves the site, the observed discrepancies must be documented in the daily report.

m. Submit a biweekly Special Inspections report until all work requiring Special Inspections is complete. A report is required for each biweekly period in which Special Inspection activity occurs; the report must include the following:

(1) A brief summary of the work performed during the reporting time frame.

(2) Changes from and discrepancies with the drawings, specifications that were observed during the reporting period.

(3) Discrepancies which were resolved or corrected.

(4) A list of nonconforming items requiring resolution.

(5) All applicable test results including nondestructive testing reports.

n. At the completion of the project submit a comprehensive final report of Special Inspections that documents the Special Inspections completed for the project including corrections of all discrepancies noted in the daily reports. The comprehensive final report of Special Inspections must be signed, dated and sealed by the SIOR.

3.1.2 Quality Control Manager

a. Supervise all Special Inspectors required by the Contract Documents and the IBC.

b. Verify the qualifications of all the Special Inspectors.

c. NOT USED

d. Maintain a 3-ring binder for the Special Inspector's special inspection daily reports and special inspection biweekly reports. This binder must be located in a conspicuous place in the project trailer/office to allow review by the Contracting Officer and the SER.

e. e. Maintain a rework items list that includes discrepancies noted on the Special Inspector's daily report.

3.1.3 Special Inspectors

a. Inspect all elements of the project which the special inspector is qualified to inspect and which are identified in the Schedule of Special Inspections.

b. Attend preparatory phase meetings related to the Definable Feature of Work (DFOW) which the Special Inspector is qualified to inspect.

c. Submit a copy of the special inspection daily reports to the QC Manager.

d. Report discrepancies that are observed during Special Inspections to the QC Manager for correction. If discrepancies are not corrected before the special inspector leaves the site the observed

discrepancies must be documented in the daily report.

e. Submit a biweekly Special Inspection Report until all inspections are complete. A report is required for each biweekly period in which Special Inspections activity occurs, and must include the following:

(1) A brief summary of the work performed during the reporting time frame.

(2) Changes from and discrepancies with the drawings, specifications that were observed during the reporting period.

(3) Discrepancies which were resolved or corrected.

(4) A list of nonconforming items requiring resolution.

(5) All applicable test result, including nondestructive testing reports.

f. At the completion of the project, submit a comprehensive final report of Special Inspections that documents the Special Inspections completed for the project and corrections of all discrepancies noted in the daily reports. The comprehensive final report of Special Inspections must be signed and dated and it must indicate the certification of the Special Inspector qualifying them to conduct the inspection.

g. Submit special inspection daily reports to the SIOR.

3.2 DEFECTIVE WORK

Check work as it progresses, but failure to detect any defective work or materials must in no way prevent later rejection if defective work or materials are discovered, nor obligate the Contracting Officer to accept the defective work or materials.

-- End of Section --

SCHEDULE OF SPECIAL INSPECTIONS

Reference UFGS 01 45 35 for all requirements not noted as part of this schedule.

INSPECTION DEFINITIONS:

PERFORM: Perform these tasks for each weld, fastener or bolted connection, and required verification.

OBSERVE: Observe these items randomly during the course of each work day to insure that applicable requirements are being met. Operations need not be delayed pending these inspections at contractor's risk.

DOCUMENT: Document, with a report, that the work has been performed in accordance with the contract documents. This is in addition to any other reports required in the Special Inspections guide specification.

CONTINUOUS: Constant monitoring of identified tasks by a special inspector over the duration of performance of said tasks.

PERIODIC: Special inspection by a special inspector who is intermittently present where the work to be inspected has been or is being performed.

The Seismic Design Category for this project is: ☐ A, ☒ B, ☐ C, ☐ D, ☐ E, ☐ F (check appropriate box)

A. STRUCTURAL STEEL – WELDING

ALL OR PORTIONS OF THIS SECTION ARE APPLICABLE IF BOX IS CHECKED: ☒

STEEL INSPECTION PRIOR TO WELDING – VERIFY THE FOLLOWING ARE IN COMPLIANCE WITH 2024 IBC 1705.2.1, AISC 360-22: Table N5.4-1 and Table C-N5.4-1		
TASK	INSPECTION TYPE[1]	DESCRIPTION
1. Verify that the welding procedures specification (WPS) is available	**PERFORM**	
2. Verify manufacturer certifications for welding consumables are available	**PERFORM**	
3. Verify material identification	**PERFORM**	Type and grade.
4. Verify use of qualified welders	**PERFORM**	Welding by welders, welding operators, and tack welders who are qualified in conformance with requirements.
5. Welder Identification System	OBSERVE	✓ Fabricator or erector, as applicable, shall maintain a system by which a welder who has welded a joint or member can be identified. ✓ Die stamping of members subjected to fatigue shall be prohibited unless approved by the engineer of record.
6. Fit-up of groove welds (including joint geometry)	OBSERVE	✓ Joint preparation ✓ Dimensions (alignment, root opening, root face, bevel) ✓ Cleanliness (condition of steel surfaces) ✓ Tacking (tack weld quality and location) ✓ Backing type and fit (if applicable)
7. Fit-up of CJP groove welds of HSS T-, Y-, and K-connections without backing (including joint geometry	**PERFORM**	✓ Joint preparations ✓ Dimensions (alignment, root opening, root face, bevel) ✓ Cleanliness (condition of steel surfaces) ✓ Tacking (tack weld quality and location)
8. Configuration and finish of access holes	OBSERVE	
9. Fit-up of fillet welds	OBSERVE	✓ Dimensions (alignment, gaps at root) ✓ Cleanliness (condition of steel surfaces) ✓ Tacking (tack weld quality and location)
STEEL INSPECTION DURING WELDING – VERIFY THE FOLLOWING ARE IN COMPLIANCE WITH 2024 IBC 1705.2.1, AISC 360-22: Table N5.4-2 and Table C-N5.4-2		
TASK	INSPECTION TYPE	DESCRIPTION
10. Control and handling of welding consumables	OBSERVE	✓ Packaging ✓ Electrode atmospheric exposure control
11. No welding over cracked tack welds	OBSERVE	
12. Environmental conditions	OBSERVE	✓ Wind speed within limits ✓ Precipitation and temperature

[1] **PERFORM**: Perform these tasks for each weld, fastener, or bolted connection, and required verification.
OBSERVE: Observe these items on a random sampling basis daily to ensure that applicable requirements are met. Operations need not be delayed pending these inspections at contractor's risk.

STEEL INSPECTION DURING WELDING – VERIFY THE FOLLOWING ARE IN COMPLIANCE WITH 2024 IBC 1705.2.1, AISC 360-22: Table N5.4-2 and Table C-N5.4-2		
TASK	INSPECTION TYPE	DESCRIPTION
13. Welding Procedures Specification followed	OBSERVE	✓ Settings on welding equipment ✓ Travel speed ✓ Selected welding materials ✓ Shielding gas type/flow rate ✓ Preheat applied ✓ Interpass temperature maintained (min./max.) ✓ Proper position (F, V, H, OH) ✓ Intermix of filler metals avoided
14. Welding techniques	OBSERVE	✓ Interpass and final cleaning ✓ Each pass within profile limitations ✓ Each pass meets quality requirements
STEEL INSPECTION AFTER WELDING – VERIFY THE FOLLOWING ARE IN COMPLIANCE WITH 2024 IBC 1705.2.1, AISC 360-22: Table N5.4-3 and Table C-N5.4-3		
TASK	INSPECTION TYPE[1]	DESCRIPTION
15. Welds cleaned	OBSERVE	✓
16. Verify size, length, and location of all welds	**PERFORM**	✓ Size, length, and location of all welds conform to the requirements of the construction drawings.
17. Verify welds meet visual acceptance criteria	**PERFORM AND DOCUMENT**	✓ Crack prohibition ✓ Weld/base-metal fusion ✓ Crater cross section ✓ Weld profiles ✓ Weld size ✓ Undercut ✓ Porosity
18. Check for arc strikes	**PERFORM**	
19. Visually inspect *k*-area	**PERFORM**	When welding of doubler plates, continuity plates or stiffeners has been performed in the k-area, visually inspect the web k-area for cracks within 3 in. (75 mm) of the weld
20. Verify backing removed, weld tabs removed and finished, and fillet welds added where required	**PERFORM**	
21. Repair activities	**PERFORM AND DOCUMENT**	
22. Acceptance or rejection of welded joint or member	**PERFORM AND DOCUMENT**	
23. No prohibited welds have been added without the approval of the engineer of record	OBSERVE	

END SECTION

[1] **PERFORM**: Perform these tasks for each weld, fastener, or bolted connection, and required verification.
OBSERVE: Observe these items on a random sampling basis daily to ensure that applicable requirements are met. Operations need not be delayed pending these inspections at contractor's risk.
DOCUMENT: Document in a report that the work has been performed as required. This is in addition to all other required reports.

B. STRUCTURAL STEEL – BOLTING

ALL OR PORTIONS OF THIS SECTION ARE APPLICABLE IF BOX IS CHECKED: ☒

STEEL INSPECTION TASKS PRIOR TO BOLTING – VERIFY THE FOLLOWING ARE IN COMPLIANCE WITH 2024 IBC 1705.2.1, AISC 360-22: Table N5.6-1 and Table C-N5.6-1		
TASK	INSPECTION TYPE[1]	DESCRIPTION
1. Verify manufacture's certifications available for fastener materials	**PERFORM**	
2. Fasteners marked in accordance with ASTM requirements	OBSERVE	
3. Proper fasteners selected for joint detail (grade, type, bolt length if threads are to be excluded from shear plane)	OBSERVE	
4. Proper bolting procedure selected for joint detail	OBSERVE	
5. Connecting elements, including appropriate faying surface condition and hole preparation, if specified, meet applicable requirements	OBSERVE	
6. Pre-installation verification testing for each fastener assembly performed by installation personnel, carefully observing and documenting the installation methods.	OBSERVE	Check if the fastener assemblies and the installation methods are capable of achieving 105%, or more, of the minimum required bolt pretension.
7. Proper storage provided for bolts, nuts, washers, and other fastener components	OBSERVE	
STEEL INSPECTION TASKS DURING BOLTING – VERIFY THE FOLLOWING ARE IN COMPLIANCE WITH 2024 IBC 1705.2.1, AISC 360-22: Table N5.6-2 and Table C-N5.6-2		
TASK	INSPECTION TYPE	DESCRIPTION
8. Fastener assemblies of suitable condition, placed in all holes and washers (if required) are positioned as required	OBSERVE	
9. Joint brought to the snug-tight condition prior to pretensioning operation	OBSERVE	
10. Fastener component not turned by the wrench prevented from rotating	OBSERVE	
11. Bolts are pretensioned in accordance with RCSC *Specification*, progressing systematically from the most rigid point toward the free edges	OBSERVE	
STEEL INSPECTION TASKS AFTER BOLTING – VERIFY THE FOLLOWING ARE IN COMPLIANCE WITH 2024 IBC 1705.2.1, AISC 360-22: Table N5.6.3 and Table C-N5.6-3		
TASK	INSPECTION TYPE	DESCRIPTION
12. Acceptance or rejection of all bolted connections	**DOCUMENT**	

END SECTION

[1] **PERFORM**: Perform these tasks for each weld, fastener, or bolted connection, and required verification.
OBSERVE: Observe these items on a random sampling basis daily to ensure that applicable requirements are met. Operations need not be delayed pending these inspections at contractor's risk.
DOCUMENT: Document in a report that the work has been performed as required. This is in addition to all other required reports.

C. STRUCTURAL STEEL - NONDESTRUCTIVE TESTING

ALL OR PORTIONS OF THIS SECTION ARE APPLICABLE IF BOX IS CHECKED: ☐

NONDESTRUCTIVE TESTING OF WELDED JOINTS – VERIFY THE FOLLOWING ARE IN COMPLIANCE WITH 2024 IBC 1705.2.1, AISC 360-22: Section N5.5		
TASK	INSPECTION TYPE[1]	DESCRIPTION
1. Verify use of qualified nondestructive testing personnel	**PERFORM**	Visual weld inspection and nondestructive testing (NDT) shall be conducted by personnel qualified in accordance with AWS D1.8 Clause 7.2
2. CJP groove welds	OBSERVE	**[NOTE: DOR must delete this row if Section D (SEISMIC PROVISIONS SECTION) is checked]** Dye penetrant testing (DT) and ultrasonic testing (UT) shall be performed on 20% of CJP groove welds for materials greater than 5/16" (8 mm) thick. Testing rate must be increased to 100% if greater than 5% of welds tested have unacceptable defects.
3. Welded joints subject to fatigue	OBSERVE	Dye penetrant testing (DT) and Ultrasonic testing (UT) shall be performed on 100% of welded joints identified on contract drawings as being subject to fatigue. Table A-3.1 in AISC 360-22 provides Fatigue Design Parameters for welded joints that must be checked.

END SECTION

[1] **PERFORM**: Perform these tasks for each weld, fastener, or bolted connection, and required verification.
OBSERVE: Observe these items on a random sampling basis daily to ensure that applicable requirements are met. Operations need not be delayed pending these inspections at contractor's risk.

D. STRUCTURAL STEEL – AISC 341 REQUIREMENTS (SEISMIC PROVISIONS)

ALL OR PORTIONS OF THIS SECTION ARE APPLICABLE IF BOX IS CHECKED: ☐

NONDESTRUCTIVE TESTING OF WELDED JOINTS – VERIFY THE FOLLOWING ARE IN COMPLIANCE WITH 2024 IBC 1705.2.1, AISC 341-22: Section J7.2		
TASK	INSPECTION TYPE[1]	DESCRIPTION
[NOTE: DOR may uncheck this section for projects NOT designed in accordance with AISC 341 (Seismic Provisions) or for projects designed according to AISC 341, but using an R value equal to 3]		
4. CJP groove welds	OBSERVE	Ultrasonic testing (UT) shall be performed on 100% of complete-joint-penetration (CJP) groove welds in materials 5/16 in. (8 mm) thick or greater. UT in materials less than 5/16 in. (8 mm) thick is not required. Welds shall be inspected by UT in compliance with AWS D1.8/D1.8M. Magnetic particle testing (MT) shall be performed on 25% of all beam-to-column CJP groove welds. Welds shall be inspected by MT in compliance with AWS D1.8/ D1.8M. For ordinary moment frames in structures in risk categories I or II, UT and MT of CJP groove welds shall be required only for demand critical welds.
5. Beam cope and access hole.	OBSERVE	At welded splices and connections, thermally cut surfaces of beam copes and access holes shall be tested using magnetic particle testing (MT) or dye penetrant testing (DT), when the flange thickness exceeds 1 1/2 in. for rolled shapes, or when the web thickness exceeds 1 1/2 in. for built-up shapes.
6. *k*-area NDT (AISC 341 Table J7.1 and AWS D1.8 Clause 7.4)	**PERFORM AND DOCUMENT**	Where welding of doubler plates, continuity plates or stiffeners has been performed in the *k*-area, the web shall be tested for cracks using magnetic particle testing (MT). The MT inspection area shall include the *k*-area base metal within 3 in. of the weld. The MT shall be performed no sooner than 48 hours following completion of the welding.
7. Placement of reinforcing or contouring fillet welds (Table J7.1)	**PERFORM AND DOCUMENT**	
8. Weld tab removal sites	OBSERVE	At the end of welds where weld tabs have been removed, magnetic particle testing shall be performed on the same beam-to-column joints receiving UT.

END SECTION

[1] **PERFORM**: Perform these tasks for each weld, fastener, or bolted connection, and required verification.
OBSERVE: Observe these items on a random sampling basis daily to ensure that applicable requirements are met. Operations need not be delayed pending these inspections at contractor's risk.
DOCUMENT: Document in a report that the work has been performed as required. This is in addition to all other required reports

E. STRUCTURAL STEEL - COMPOSITE CONSTRUCTION[1]

ALL OR PORTIONS OF THIS SECTION ARE APPLICABLE IF BOX IS CHECKED: ☐

COMPOSITE CONSTRUCTION PRIOR TO PLACING CONCRETE – VERIFY THE FOLLOWING ARE IN COMPLIANCE WITH 2024 IBC 1705.2.1, AISC 360-22: Table N5.4-2, AISC 341-22: Table J10.1		
TASK	INSPECTION TYPE	DESCRIPTION
1. Placement and installation of steel headed stud anchors	**PERFORM**	
2. Material identification of reinforcing steel (Type/Grade)	OBSERVE	
3. Determination of carbon equivalent for reinforcing steel other than ASTM A706	OBSERVE	
4. Proper reinforcing steel size, spacing, clearances, support, and orientation	OBSERVE	
5. Reinforcing steel has not been rebent in the field	OBSERVE	
6. Required reinforcing steel clearances have been provided	OBSERVE	
7. Reinforcing steel has been tied and supported as required	OBSERVE	
8. Composite member has required size	OBSERVE	

END SECTION

F. STRUCTURAL STEEL - OTHER INSPECTIONS

ALL OR PORTIONS OF THIS SECTION ARE APPLICABLE IF BOX IS CHECKED: ☒

OTHER STEEL INSPECTIONS – VERIFY THE FOLLOWING ARE IN COMPLIANCE WITH 2024 IBC 1705.2.1, AISC 360-22 Section N5.8, AISC 341-22: Tables J9.1 & J11.1		
TASK	INSPECTION TYPE [2]	DESCRIPTION
1. Verify anchor rods and other embedments supporting structural steel	**PERFORM**	Verify the diameter, grade, type, and length of the anchor rod or embedded item, and the extent or depth of embedment prior to placement of concrete.
2. Fabricated steel or erected steel frame	OBSERVE	Verify compliance with the details shown on the construction documents, such as braces, stiffeners, member locations and proper application of joint details at each connection.
3. Check reduced beam sections (RBS) where/if they occur	**PERFORM AND DOCUMENT**	✓ Contour and finish ✓ Dimensional tolerances
4. Check protected zones	**PERFORM AND DOCUMENT**	No holes or unapproved attachments made by fabricator or erector
5. Check H-piles where/if they occur	**PERFORM AND DOCUMENT**	No holes or unapproved attachments made by the responsible contractor

END SECTION

G. STRUCTURAL COLD-FORMED METAL DECK PLACEMENT

---

[1] See Concrete Construction Section for all concrete related inspection of composite steel construction.

[2] **PERFORM**: Perform these tasks for each weld, fastener, or bolted connection, and required verification.
OBSERVE: Observe these items on a random sampling basis daily to ensure that applicable requirements are met. Operations need not be delayed pending these inspections at contractor's risk.
DOCUMENT: Document in a report that the work has been performed as required. This is in addition to all other required reports.

ALL OR PORTIONS OF THIS SECTION ARE APPLICABLE IF BOX IS CHECKED: ☐

METAL DECK INSPECTION PRIOR TO DECK PLACEMENT – VERIFY THE FOLLOWING ARE IN COMPLIANCE WITH 2024 IBC 1705.2.3, SDI QA/QC-2022, Appendix 1, Table 1.1		
TASK	INSPECTION TYPE [1]	DESCRIPTION
1. Verify compliance of materials (deck and all deck accessories) with construction documents, including profiles, material properties, and base metal thickness	**PERFORM**	
2. Acceptance or rejection of deck and deck accessories	**DOCUMENT**	
METAL DECK INSPECTION AFTER DECK PLACEMENT – VERIFY THE FOLLOWING ARE IN COMPLIANCE WITH 2024 IBC 1705.2.3, SDI QA/QC-2022, Appendix 1, Table 1.2		
TASK	INSPECTION TYPE	DESCRIPTION
3. Verify compliance of deck and all deck accessory installation with construction documents	**PERFORM**	
4. Verify deck materials are represented by the mill certifications that comply with the construction documents	**PERFORM**	
5. Acceptance or rejection of installation of deck and deck accessories	**DOCUMENT**	
METAL DECK INSPECTION PRIOR TO WELDING – VERIFY THE FOLLOWING ARE IN COMPLIANCE WITH 2024 IBC 1705.2.3, SDI QA/QC-2022, Appendix 1, Table 1.3		
TASK	INSPECTION TYPE	DESCRIPTION
6. Verify welding procedure specification (WPS) is available	**PERFORM**	
7. Verify manufacturer's certifications for welding consumables are available	**PERFORM**	
8. Material identification (type/grade)	OBSERVE	
9. Check welding equipment	**PERFORM**	

END SECTION

[1] **PERFORM**: Perform these tasks for each weld, fastener, or bolted connection, and required verification.
OBSERVE: Observe these items on a random sampling basis daily to ensure that applicable requirements are met. Operations need not be delayed pending these inspections at contractor's risk.
DOCUMENT: Document in a report that the work has been performed as required. This is in addition to all other required reports.

H. STRUCTURAL COLD-FORMED METAL DECK – WELDING

ALL OR PORTIONS OF THIS SECTION ARE APPLICABLE IF BOX IS CHECKED: ☐

METAL DECK INSPECTION DURING WELDING – VERIFY THE FOLLOWING ARE IN COMPLIANCE WITH 2024 IBC 1705.2.3, SDI QA/QC-2022, Appendix 1, Table 1.4		
TASK	INSPECTION TYPE [1]	DESCRIPTION
1. Use of qualified welders	OBSERVE	
2. Control and handling of welding consumables	OBSERVE	
3. Environmental conditions (wind speed, moisture, temperature)	OBSERVE	
4. WPS followed	OBSERVE	
METAL DECK INSPECTION AFTER WELDING – VERIFY THE FOLLOWING ARE IN COMPLIANCE WITH 2024 IBC 1705.2.3, SDI QA/QC-2022, Appendix 1, Table 1.5		
TASK	INSPECTION TYPE	DESCRIPTION
5. Verify size and location of welds, including support, sidelap, and perimeter welds.	**PERFORM**	
6. Verify welds meet visual acceptance criteria	**PERFORM**	
7. Verify repair activities	**PERFORM**	
8. Acceptance or rejection of welds	**DOCUMENT**	

END SECTION

[1] **PERFORM**: Perform these tasks for each weld, fastener, or bolted connection, and required verification.
OBSERVE: Observe these items on a random sampling basis daily to ensure that applicable requirements are met. Operations need not be delayed pending these inspections at contractor's risk.
DOCUMENT: Document in a report that the work has been performed as required. This is in addition to all other required reports.

I. STRUCTURAL COLD-FORMED METAL DECK – FASTENING

ALL OR PORTIONS OF THIS SECTION ARE APPLICABLE IF BOX IS CHECKED: ☐

METAL DECK INSPECTION BEFORE MECHANICAL FASTENING – VERIFY THE FOLLOWING ARE IN COMPLIANCE WITH 2024 IBC 1705.2.3, SDI QA/QC-2022, Appendix 1, Table 1.6		
TASK	INSPECTION TYPE	DESCRIPTION
1. Manufacturer installation instructions available for mechanical fasteners	OBSERVE	
2. Proper tools available for fastener installation	OBSERVE	
3. Proper storage for mechanical fasteners	OBSERVE	✓ Fasteners are located away from moisture and in a protected location, such as off the ground and away from excessive handling. ✓ Uncoated fasteners are stored in airtight containers to reduce corrosion and rust.
METAL DECK INSPECTION DURING MECHANICAL FASTENING – VERIFY THE FOLLOWING ARE IN COMPLIANCE WITH 2024 IBC 1705.2.3, SDI QA/QC-2022, Appendix 1, Table 1.7		
TASK	INSPECTION TYPE	DESCRIPTION
4. Fasteners are positioned as required	OBSERVE	
5. Fasteners are installed in accordance with manufacturer's instructions	OBSERVE	
METAL DECK INSPECTION AFTER MECHANICAL FASTENING – VERIFY THE FOLLOWING ARE IN COMPLIANCE WITH 2024 IBC 1705.2.3, SDI QA/QC-2022, Appendix 1, Table 1.8		
TASK	INSPECTION TYPE[1]	DESCRIPTION
6. Check spacing, type, and installation of support fasteners	**PERFORM**	
7. Check spacing, type, and installation of side-lap fasteners	**PERFORM**	
8. Check spacing, type, and installation of perimeter fasteners	**PERFORM**	
9. Verify repair activities	**PERFORM**	
10. Acceptance or rejection of mechanical fasteners	**DOCUMENT**	

END SECTION

[1] **PERFORM**: Perform these tasks for each weld, fastener, or bolted connection, and required verification.
OBSERVE: Observe these items on a random sampling basis daily to ensure that applicable requirements are met. Operations need not be delayed pending these inspections at contractor's risk.
DOCUMENT: Document in a report that the work has been performed as required. This is in addition to all other required reports.

J. STRUCTURAL COLD-FORMED STEEL FRAMING AND/OR COLD-FORMED TRUSSES

ALL OR PORTIONS OF THIS SECTION ARE APPLICABLE IF BOX IS CHECKED: ☐

COLD-FORMED STEEL CONSTRUCTION AND CONNECTIONS – VERIFY THE FOLLOWING ARE IN COMPLIANCE WITH 2024 IBC 1705.2.5, 1705.12.2, 1705.12.3, 1705.13.3, 1705.13.9, UFC 4 023 03		
TASK	INSPECTION TYPE[1]	DESCRIPTION
1. Verify compliance of trusses spanning 60-feet or greater where/if applicable	**PERFORM**	Verify that temporary and permanent truss restraint/bracing is installed in accordance with approved truss submittal package.
2. Welded connections (seismic and/or wind resisting system)	OBSERVE	Visually inspect all welds that are part of the main wind or seismic force resisting system, including shear walls, braces, collectors (drag struts), and hold-downs. **[NOTE: DOR must identify critical wind and/or seismic force resisting welds in the contract drawings so that the special inspector can confirm compliance.]**
3. Connections (seismic and/or wind resisting system)	OBSERVE	Visually inspect all screw attachment, bolting, anchoring and other fastening of components within the main wind or seismic force resisting system, including roof deck, roof framing, exterior wall covering, wall to roof/floor connections, braces, collectors (drag struts) and hold-downs. **[NOTE: DOR must identify critical wind and/or seismic force resisting connection/fastener components in the contract drawings so that the special inspector can confirm compliance.]**
4. Cold-formed steel (progressive collapse resisting system where/if applicable)	OBSERVE	Verify proper welding operations, screw attachment, bolting, anchoring and other fastening of components within the progressive collapse resisting system, including horizontal tie force elements, vertical tie force elements and bridging elements (UFC 4 023 03). **[NOTE: DOR must identify critical progressive collapse resisting connection/fastener components in the contract drawings so that the special inspector can confirm compliance.]**

END SECTION

K. STRUCTURAL OPEN-WEB STEEL JOISTS

ALL OR PORTIONS OF THIS SECTION ARE APPLICABLE IF BOX IS CHECKED: ☐

OPEN-WEB STEEL JOISTS AND JOIST GIRDERS – VERIFY THE FOLLOWING ARE IN COMPLIANCE WITH 2024 IBC TABLE 1705.2.4, 2024 IBC 2207.1, SJI 100 OR 200		
	INSPECTION TYPE [1]	DESCRIPTION
1. Installation of open-web steel joists and joist girders	OBSERVE	✓ End connections – welded or bolted for compliance with SJI 100 or 200 ✓ Bridging – horizontal and diagonal for compliance with SJI 100 or 200

END SECTION

[1] **PERFORM**: Perform these tasks for each weld, fastener, or bolted connection, and required verification.
OBSERVE: Observe these items on a random sampling basis daily to ensure that applicable requirements are met. Operations need not be delayed pending these inspections at contractor's risk.

L. STRUCTURAL CONCRETE CONSTRUCTION

ALL OR PORTIONS OF THIS SECTION ARE APPLICABLE IF BOX IS CHECKED: ☒

CONCRETE CONSTRUCTION, INCLUDING COMPOSITE DECK – VERIFY THE FOLLOWING ARE IN COMPLIANCE WITH 2024 IBC TABLE 1705.3 (ACI 318-19 REFERENCES NOTED IN IBC TABLE)		
TASK	INSPECTION TYPE [1]	DESCRIPTION
1. Inspect reinforcement, including prestressing tendons, and verify placement.	PERIODIC	Verify prior to placing concrete that reinforcement is of specified type, grade and size; that it is free of oil, dirt and unacceptable rust; that it is located and spaced properly; that specified cover has been provided; that hooks, bends, ties, stirrups and supplemental reinforcement are placed correctly; that specified lap lengths, stagger and offsets are provided; and that all mechanical connections are installed per the manufacturer's instructions and/or evaluation report.
2. Inspect reinforcing bar welding	PERIODIC	✓ Verify weldability of reinforcing bars other than ASTM A 706 ✓ Inspect single-pass fillet welds, maximum 5/16" in accordance with AWS D1.4
	CONTINUOUS	✓ Inspect welding of reinforcement for special moment frame, boundary elements of special shear walls, and coupling beams. ✓ Inspect welded reinforcement splices. ✓ Inspect welding of primary tension reinforcement in corbels.
	PERIODIC	✓ Inspect all other welds in accordance with AWS D1.4
3. Inspect cast-in-place anchors, post-installed drilled anchors, and adhesive anchors other than those in item 4 below	PERIODIC	✓ Verify prior to placing concrete that cast in place anchors and post installed drilled anchors have proper embedment, spacing and edge distance. ✓ Inspection requirements for adhesive anchors are different from those for other post-installed anchors and require assessment and qualification under the provisions of ACI 355.4 which may require proof loading.
4. Inspect post-installed adhesive anchors in horizontal or upward inclined orientations and	CONTINUOUS AND DOCUMENT	✓ Inspect as required per approved ICC-ES report

[1] **PERIODIC**: Special inspection by a special inspector who is intermittently present where the work to be inspected has been or is being performed.
DOCUMENT: Document in a report that the work has been performed as required. This is in addition to all other required reports.
CONTINUOUS: Constant monitoring of identified tasks by a special inspector over the duration of performance of said tasks.

CONCRETE CONSTRUCTION, INCLUDING COMPOSITE DECK – VERIFY THE FOLLOWING ARE IN COMPLIANCE WITH 2024 IBC TABLE 1705.3 (ACI 318-19 REFERENCES NOTED IN IBC TABLE)		
TASK	INSPECTION TYPE [1]	DESCRIPTION
subject to sustained tension loading.		✓ Verify that installer is certified for installation of horizontal and overhead installation applications ✓ Verify proof loading as required by the contract documents
5. Verify use of required mix design	PERIODIC	Verify that all mixes used comply with the approved construction documents
6. Prior to concrete placement, fabricate specimens for strength tests, perform slump and air content tests, and determine the temperature of the concrete	CONTINUOUS	At the time fresh concrete is sampled to fabricate specimens for strength test, verify these tests are performed by qualified technicians.
7. Inspect concrete and/or shotcrete placement for proper application techniques	CONTINUOUS	Verify proper application techniques are used during concrete conveyance and that depositing avoids segregation or contamination. Verify that concrete is properly consolidated.
8. Verify maintenance of specified curing temperature and technique	PERIODIC	Inspect curing and cold weather, or hot weather protection procedures.
9. Inspect prestressed concrete	CONTINUOUS	Verify application of prestressing forces and grouting of bonded prestressing tendons.
10. Inspect erection of precast concrete members	PERIODIC	✓ Verify dimensional tolerances for precast members and interfacing members. ✓ Verify details of lifting devices, embedments, and related reinforcement required to resist temporary loads from handling, storage, transportation, and erection, if designed by the licensed design professional.
11. Inspect precast concrete diaphragm connections or reinforcement at joints classified as moderate or high deformability element (MDE or HDE) in structures assigned to Seismic Design Category C, D, E, or F	**CONTINUOUS**	Inspect such connections and reinforcement in the field for: ✓ Installation of the embedded parts ✓ Completion of the continuity of reinforcement across joints. ✓ Completion of connections in the field
12. Inspect installation tolerances of precast concrete diaphragm connections for compliance with ACI 550.5	PERIODIC	

CONCRETE CONSTRUCTION, INCLUDING COMPOSITE DECK – VERIFY THE FOLLOWING ARE IN COMPLIANCE WITH 2024 IBC TABLE 1705.3 (ACI 318-19 REFERENCES NOTED IN IBC TABLE)		
TASK	INSPECTION TYPE [1]	DESCRIPTION
13. Verify in-situ concrete strength, prior to stressing of tendons in post-tensioned concrete and prior to removal of shores and forms from beams and structural slabs.	PERIODIC	See ACI 318 26.11.2
14. Inspect formwork for shape, location and dimensions of the concrete member being formed.	PERIODIC	Formwork fabrication and installation shall result in final structure that conforms to shapes, lines, and dimensions of the members as required by the construction documents.

END SECTION

M. STRUCTURAL - MASONRY CONSTRUCTION (ALL RISK CATEGORIES)

ALL OR PORTIONS OF THIS SECTION ARE APPLICABLE IF BOX IS CHECKED: ☒

MASONRY CONSTRUCTION – VERIFY THE FOLLOWING ARE IN COMPLIANCE WITH AT START OF CONSTRUCTION 2024 IBC 1705.4 (TMS 402/602-22 TABLE 3 & 4)		
TASK	INSPECTION TYPE [1]	DESCRIPTION
1. Verify compliance with approved submittals prior to start	PERIODIC	
2. Verify proportions of site-mixed mortar.	PERIODIC	
3. Verify grade, type and size of reinforcement, connectors, and anchor bolts	PERIODIC	
4. Verify sample panel construction	PERIODIC ~~CONTINUOUS~~	~~[NOTE: DOR must either delete 'PERIODIC' for Risk Category IV/V, or delete 'CONTINUOUS' for Risk Categories I/II/ III]~~
MASONRY CONSTRUCTION – VERIFY THE FOLLOWING ARE IN COMPLIANCE WITH PRIOR TO GROUTING IBC 1705.4 (TMS 402/602-22 TABLE 4)		
TASK	INSPECTION TYPE	DESCRIPTION
5. Verify grout space	PERIODIC CONTINUOUS	~~[NOTE: DOR must either delete 'PERIODIC' for Risk Category IV/V, or delete 'CONTINUOUS' for Risk Categories I/II/ III]~~
6. Verify placement of reinforcement, connectors, and anchor bolts	PERIODIC ~~CONTINUOUS~~	~~[NOTE: DOR must either delete 'PERIODIC' for Risk Category IV/V, or delete 'CONTINUOUS' for Risk Categories I/II/ III]~~
7. Verify proportions of site-prepared grout	PERIODIC	
MASONRY CONSTRUCTION – VERIFY THE FOLLOWING ARE IN COMPLIANCE WITH DURING CONSTRUCTION IBC 1705.4 (ACI 530-16 TABLE 4)		
TASK	INSPECTION TYPE	DESCRIPTION
8. Verify compliance of materials and procedures with the approved submittals	PERIODIC	
9. Verify placement of masonry units and mortar joint construction	PERIODIC	
10. Verify size and location of structural elements	PERIODIC	
11. Verify type, size and placement of reinforcement, connectors, anchor bolts, and anchorages, including details of anchorage of masonry to structural members, frames, or other construction	PERIODIC ~~CONTINUOUS~~	~~[NOTE: DOR must either delete 'PERIODIC' for Risk Category IV/V, or delete 'CONTINUOUS' for Risk Categories I/II/III]~~
12. Verify type, size and location of veneer ties and movement joints	PERIODIC	Periodic inspection of veneers is required when the height of the veneer exceeds 60 ft (18.3 m) above grade plane. See Commentary in Appendix A.

[1] **PERIODIC**: Special inspection by a special inspector who is intermittently present where the work to be inspected has been or is being performed.
CONTINUOUS: Constant monitoring of identified tasks by a special inspector over the duration of performance of said tasks.

MASONRY CONSTRUCTION – VERIFY THE FOLLOWING ARE IN COMPLIANCE WITH DURING CONSTRUCTION IBC 1705.4 (ACI 530-16 TABLE 4)		
TASK	INSPECTION TYPE	DESCRIPTION
13. Verify installation of adhered veneer	PERIODIC	Periodic inspection of veneers is required when the height of the veneer exceeds 60 ft (18.3 m) above grade plane
14. Verify welding of reinforcement	**CONTINUOUS**	
15. Verify preparation, construction, and protection of masonry during cold weather (temperature below 40°F (4.4°c) or hot weather (temp above 90°F (32.2°C))	PERIODIC	
16. Verify placement of grout	**CONTINUOUS**	
17. Observe preparation of grout specimens, mortar specimens, and/or prisms	PERIODIC ~~**CONTINUOUS**~~	~~**[NOTE: DOR must either delete 'PERIODIC' for Risk Category IV/V, or delete 'CONTINUOUS' for Risk Categories I/II/III]**~~

END SECTION

N. STRUCTURAL – WOOD CONSTRUCTION – SPECIALTY ITEMS

ALL OR PORTIONS OF THIS SECTION ARE APPLICABLE IF BOX IS CHECKED: ☐

WOOD CONSTRUCTION – VERIFY THE FOLLOWING ARE IN COMPLIANCE WITH 2024 IBC 1705.5		
TASK	INSPECTION TYPE[1]	DESCRIPTION
1. High-load diaphragms where applicable	PERIODIC	Verify thickness and grade of sheathing, size of framing members at panel edges, nail diameters and length, and the number of fastener lines and that fastener spacing is per approved contract documents.
2. Metal-plate connected wood trusses spanning 60 feet or greater	PERIODIC	Verify that the temporary installation restraint/bracing and the permanent individual truss member restraint/bracing are installed in accordance with the approved truss submittal package
Mass timber elements in Type IV-A, IV-B, and IV-C construction. Refer to 2024 IBC 602.4 for details about Type IV construction		
3. Inspect anchorage and connections of mass timber construction to timber deep foundation systems	PERIODIC	
4. Inspect erection of mass timber construction	PERIODIC	
5. Inspect connections where installation methods are required to meet design loads		
a) Threaded fasteners	PERIODIC	✓ Verify use of proper installation equipment ✓ Verify use of pre-drilled holes where required ✓ Inspect screws, including diameter, length, head type, spacing, installation angle and depth
b) Adhesive anchors connections installed in horizontal or upwardly inclined orientation to resist sustained tension loads.	CONTINUOUS	
c) Adhesive anchors not defined in preceding cell	PERIODIC	
d) Bolted connections	PERIODIC	
e) Concealed connections	PERIODIC	

END SECTION

[1] **PERIODIC**: Special inspection by a special inspector who is intermittently present where the work to be inspected has been or is being performed.
CONTINUOUS: Constant monitoring of identified tasks by a special inspector over the duration of performance of said tasks.

O. STRUCTURAL WOOD CONSTRUCTION - SEISMIC & WIND

THIS SECTION IS APPLICABLE IF BOX IS CHECKED: ☐

WOOD CONSTRUCTION SEISMIC AND WIND – VERIFY THE FOLLOWING ARE IN COMPLIANCE WITH 2024 IBC 1705.12 & 1705.13.2		
TASK	INSPECTION TYPE[1]	DESCRIPTION
[NOTE: DOR may uncheck this section where the lateral resistance is provided by structural sheathing, the sheathing nailing/fasteners (shear walls, shear panels and diaphragms) are consistently greater than 4" on center, or if the design wind speed (ASD) is less than 140 mph (62.6 meters/sec) AND the seismic design category is A or B]		
1. Nailing, bolting, anchoring and other fastening of elements of the main wind/seismic force-resisting system	PERIODIC	Includes connectors for: shear wall sheathing, roof/floor sheathing, drag struts/collectors (double top plates), braces, hold downs, roof connections to exterior walls.
2. Field gluing operations of elements of the main wind/seismic force-resisting system	**CONTINUOUS**	

END SECTION

P. STRUCTURAL ISOLATION AND ENERGY DISSIPATION SYSTEMS

ALL OR PORTIONS OF THIS SECTION ARE APPLICABLE IF BOX IS CHECKED: ☐

ISOLATION AND ENERGY DISSIPATION SYSTEMS – VERIFY THE FOLLOWING ARE IN COMPLIANCE WITH 2024 IBC 1705.13.8, 1705.14.4		
[NOTE: This section is <u>not</u> applicable to Seismic Design Category A. Uncheck this section if this category applies]		
TASK	INSPECTION TYPE[2]	DESCRIPTION
1. Verify fabrication and installation of isolator units and energy dissipation devices	PERFORM	Verify that fabrication and installation of isolator units and energy dissipation devices conform to manufacturer's recommendations and approved construction documents
2. Test of seismic isolation systems in seismically isolated structures	PERFORM	Seismic isolation systems in seismically isolated structures shall be tested in accordance with ASCE 7, Section 17.8

END SECTION

[1] **PERIODIC**: Special inspection by a special inspector who is intermittently present where the work to be inspected has been or is being performed.
CONTINUOUS: Constant monitoring of identified tasks by a special inspector over the duration of performance of said tasks.
[2] **PERFORM**: Perform these tasks for each weld, fastener, or bolted connection, and required verification.

Q. GEOTECHNICAL - SOILS INSPECTION

ALL OR PORTIONS OF THIS SECTION ARE APPLICABLE IF BOX IS CHECKED: ☐

SOILS INSPECTION – VERIFY THE FOLLOWING ARE IN COMPLIANCE WITH 2024 IBC 1705.6 and TABLE 1705.6		
TASK	INSPECTION TYPE[1]	DESCRIPTION
1. Verify materials below shallow foundations are adequate to achieve the design bearing capacity.	PERIODIC	
2. Verify excavations are extended to proper depth and have reached proper material	PERIODIC	
3. Perform classification and testing of compacted fill materials	PERIODIC	
4. Prior to placement of compacted fill, inspect subgrade and verify that site has been prepared properly	PERIODIC	
5. During fill placement, verify use of proper materials and procedures in accordance with the provisions of the approved geotechnical report. Verify densities and lift thicknesses during placement and compaction of compacted fill	**CONTINUOUS**	

END SECTION

R. GEOTECHNICAL - DRIVEN DEEP FOUNDATION ELEMENTS

ALL OR PORTIONS OF THIS SECTION ARE APPLICABLE IF BOX IS CHECKED: ☐

DRIVEN DEEP FOUNDATION ELEMENTS – VERIFY THE FOLLOWING ARE IN COMPLIANCE WITH 2024 IBC 1705.7 and TABLE 1705.7		
TASK	INSPECTION TYPE	DESCRIPTION
1. Verify element materials, sizes and lengths comply with requirements	**CONTINUOUS**	
2. Inspect driving operations and maintain complete and accurate records for each element	**CONTINUOUS**	
3. Verify placement locations and plumbness, confirm type and size of hammer, record number of blows per foot of penetration, determine required penetrations to achieve design capacity, record tip and butt elevations and document any damage to foundation element	**CONTINUOUS**	
4. Determine capacities of test elements and conduct additional load tests if required.	**CONTINUOUS**	
5. For steel, concrete, concrete-filled, perform additional special inspections in accordance with the steel and concrete sections in this schedule		
6. For specialty elements, perform additional inspections as determined by the licensed design professional in responsible charge		In accordance with Statement of Special Inspections

END SECTION

[1] **PERIODIC**: Special inspection by a special inspector who is intermittently present where the work to be inspected has been or is being performed.
CONTINUOUS: Constant monitoring of identified tasks by a special inspector over the duration of performance of said tasks.

S. GEOTECHNICAL - HELICAL PILE FOUNDATIONS

ALL OR PORTIONS OF THIS SECTION ARE APPLICABLE IF BOX IS CHECKED: ☐

HELICAL PILE FOUNDATIONS – VERIFY THE FOLLOWING ARE IN COMPLIANCE WITH 2024 IBC 1705.9		
TASK	INSPECTION TYPE	DESCRIPTION
1. Record installation equipment used, pile dimensions, tip elevations, final depth, final installation torque and other pertinent installation data as required. The approved geotechnical report and the contract documents prepared by the licensed design professional in responsible charge shall be used to determine compliance	**CONTINUOUS**	
2. Determine capacities of test elements and conduct additional load tests if required.	**CONTINUOUS**	

END SECTION

T. GEOTECHNICAL – CAST-IN-PLACE CONCRETE DEEP FOUNDATION ELEMENTS

ALL OR PORTIONS OF THIS SECTION ARE APPLICABLE IF BOX IS CHECKED: ☐

CAST-IN-PLACE CONCRETE DEEP FOUNDATION ELEMENTS – VERIFY THE FOLLOWING ARE IN COMPLIANCE WITH 2024 IBC 1705.8		
TASK	INSPECTION TYPE [1]	DESCRIPTION
1. Inspect drilling operations and maintain complete and accurate records for each element	**CONTINUOUS**	
2. Verify placement locations and plumbness, confirm element diameters, bell diameters (if applicable), lengths, embedment into bedrock (if applicable) and adequate end-bearing strata capacity. Record concrete or grout volumes	**CONTINUOUS**	
3. For concrete elements, perform tests and additional special inspections in accordance with Concrete section of this schedule	**CONTINUOUS**	
4. Determine capacities of test elements and conduct additional load tests if required.	**CONTINUOUS**	

END SECTION

[1] **CONTINUOUS:** Constant monitoring of identified tasks by a special inspector over the duration of performance of said tasks.

U. FIRE PROTECTION - SPRAYED FIRE-RESISTANT MATERIALS

ALL OR PORTIONS OF THIS SECTION ARE APPLICABLE IF BOX IS CHECKED: ☐

SPRAYED FIRE RESISTANT MATERIALS (SFRM) – VERIFY THE FOLLOWING ARE IN COMPLIANCE WITH 2024 IBC 1705.15		
TASK	INSPECTION TYPE [1]	DESCRIPTION
1. Check substrate condition	PERIODIC	Prior to application, confirm that surfaces have been prepared according to the approved fire-resistant design and manufacturer's instructions. See 2024 IBC 1705.15.2 and 1705.15.3 for more details.
2. Verify material thickness	PERIODIC	Verify SFRM thickness according to 2024 IBC 1705.15.4
3. Verify material density	PERIODIC	Verify SFRM density according to 2024 IBC 1705.15.5
4. Verify bond strength	PERIODIC	Verify bond strength of cured SFRM according to 2024 IBC 1705.15.6
5. Inspect the condition of finished application	PERIODIC	

END SECTION

V. FIRE PROTECTION - INTUMESCENT FIRE-RESISTIVE MATERIALS

ALL OR PORTIONS OF THIS SECTION ARE APPLICABLE IF BOX IS CHECKED: ☐

INTUMESCENT FIRE-RESISTIVE MATERIALS – VERIFY THE FOLLOWING ARE IN COMPLIANCE WITH 2024 IBC 1705.16		
TASK	INSPECTION TYPE	DESCRIPTION
1. Inspect according to AWCI 12-B and the contract documents	PERIODIC	Inspections shall be performed in accordance with AWCI 12-B, Standard Practice for the Testing and Inspection of Field Applied Thin Film Intumescent Fire-Resistive Materials. Inspections shall be performed during construction. Additional visual inspection shall be performed after rough installation and where applicable, prior to the concealment of electrical, automatic sprinkler, mechanical and plumbing systems.

END SECTION

W. FIRE PROTECTION – FIRE-RESISTANT PENETRATIONS AND JOINTS

ALL OR PORTIONS OF THIS SECTION ARE APPLICABLE IF BOX IS CHECKED: ☐

FIRE-RESISTANT PENETRATIONS AND JOINTS – VERIFY THE FOLLOWING ARE IN COMPLIANCE WITH 2024 IBC 1705.18		
TASK	INSPECTION TYPE	DESCRIPTION
1. Inspect of penetration firestop systems conducted in accordance with ASTM E2174.	PERIODIC	**[NOTE: This section applies to Risk Category III, IV, & V structures, or in fire areas containing Group R occupancies with an occupant load greater than 250. DOR may choose to uncheck this section where project is assigned to Risk Category I or II. Confirm Risk Category with licensed design professional in responsible charge]**
2. Inspecti of fire-resistant joint systems conducted in accordance with ASTM E2393	PERIODIC	

END SECTION

[1] **PERIODIC**: Special inspection by a special inspector who is intermittently present where the work to be inspected has been or is being performed.

X. FIRE PROTECTION – SMOKE CONTROL

ALL OR PORTIONS OF THIS SECTION ARE APPLICABLE IF BOX IS CHECKED: ☐

SMOKE CONTROL – VERIFY THE FOLLOWING ARE IN COMPLIANCE WITH 2024 IBC 1705.19		
TASK	INSPECTION TYPE[1]	DESCRIPTION
1. Verify device locations and perform leakage testing	PERIODIC	Perform during erection of ductwork and prior to concealment
2. Perform pressure difference testing, flow measurements and detection and control verification	PERIODIC	Perform prior to occupancy and after sufficient completion

END SECTION

Y. SEALANT – SEALING OF MASS TIMBER

ALL OR PORTIONS OF THIS SECTION ARE APPLICABLE IF BOX IS CHECKED: ☐

SEALING OF MASS TIMBER – VERIFY THE FOLLOWING ARE IN COMPLIANCE WITH 2024 IBC 1705.20		
TASK	INSPECTION TYPE	DESCRIPTION
1. Inspect sealants or adhesives	PERIODIC	Inspect sealants or adhesives where sealant and adhesive are required by 2024 IBC 703.7

END SECTION

[1] **PERIODIC**: Special inspection by a special inspector who is intermittently present where the work to be inspected has been or is being performed.

Z. ARCHITECTURAL - EXTERIOR INSULATION AND FINISH SYSTEMS

ALL OR PORTIONS OF THIS SECTION ARE APPLICABLE IF BOX IS CHECKED: ☐

EXTERIOR INSULATION AND FINISH SYSTEMS (EIFS) – VERIFY THE FOLLOWING ARE IN COMPLIANCE WITH 2024 IBC 1705.17		
TASK	INSPECTION TYPE[1]	DESCRIPTION
1. Water-resistive barrier coating applied over a sheathing substrate.	PERIODIC	Verify that water-resistive barrier coating complies with ASTM E2570. **[NOTE: Not required for EIFS applications installed over:** **a) a water-resistive barrier with a means of draining moisture to the exterior.** **b) masonry or concrete walls** **Uncheck this section in those cases]**

END SECTION

AA. ARCHITECTURAL – ARCHITECTURAL COMPONENTS

ALL OR PORTIONS OF THIS SECTION ARE APPLICABLE IF BOX IS CHECKED: ☐

ARCHITECTURAL COMPONENTS – VERIFY THE FOLLOWING ARE IN COMPLIANCE WITH 2024 IBC 1705.13.5, 1705.13.7 and TABLE 1705.13.7		
TASK	INSPECTION TYPE	DESCRIPTION
[NOTE: This section is not applicable to Seismic Design Categories A, B, & C. Uncheck this section if one of those categories applies. Confirm Seismic Design Category with the licensed design professional in responsible charge.]		
1. Erection and fastening of exterior cladding and interior and exterior veneer.	PERIODIC	Verify appropriate materials, fasteners and attachment at commencement of work and at completion. **[NOTE: Inspection not required if height is less than 30 feet or weight is less than 5psf]**
2. Interior and exterior non-load-bearing walls	PERIODIC	Verify appropriate materials, fasteners and attachment at commencement of work and at completion. **[NOTE: Inspection not required if interior non-load-bearing walls weigh less than 15psf]**
3. Access floors	PERIODIC	Verify that anchorage complies with approved construction documents.
4. Storage racks	PERIODIC	Steel storage racks and steel cantilevered storage racks that are 8 feet in height or greater shall be inspected for: ✓ Materials used, to verify compliance with one or more of the material test reports in accordance with the approved construction documents ✓ Fabricated storage rack elements ✓ Storage rack anchorage installation ✓ Completion of storage rack system Inspection of post-installed anchors shall comply with approved ICC-ES report. **[NOTE: Not required for racks less than 8 feet in height]**

END SECTION

[1] **PERIODIC**: Special inspection by a special inspector who is intermittently present where the work to be inspected has been or is being performed.

BB. PLUMBING/MECHANICAL/ELECTRICAL - DESIGNATED SEISMIC SYSTEMS

ALL OR PORTIONS OF THIS SECTION ARE APPLICABLE IF BOX IS CHECKED: ☐

PLUMBING, MECHANICAL AND ELECTRICAL – DESIGNATED SEISMIC SYSTEMS 2024 IBC 1705.13.6		
TASK	INSPECTION TYPE[1]	DESCRIPTION
[NOTE: This section is not applicable to Seismic Design Categories A or B. Uncheck this section if one of those categories applies. Confirm Seismic Design Category with licensed design professional in responsible charge.]		
1. Check anchorage of electrical equipment for emergency and standby power systems	PERIODIC	✓ Check for general conformance
2. Check anchorage of all other electrical equipment in Seismic Design Categories E and F only (See first page of this schedule for Seismic Design Category)	PERIODIC	✓ Check for general conformance
3. Check installation and anchorage of piping designed to carry hazardous materials and their associated mechanical units.	PERIODIC	✓ Check for general conformance
4. Check installation and anchorage of vibration isolation systems where the construction documents require a nominal clearance of ¼" or less between support framing and restraint.	PERIODIC	✓ Check for general conformance
5. Verify clearance between fire sprinkler piping and surrounding mechanical and electrical equipment, including ductwork, piping and their structural supports.	PERIODIC	✓ Check for minimum clearances noted in ASCE 7 13.2.3 or a nominal clearance of not less than 3 in.

END SECTION

[1] **PERIODIC**: Special inspection by a special inspector who is intermittently present where the work to be inspected has been or is being performed.

APPPENDIX A

Commentary on M12

Table 4 of TMS 602-22 does not have any Level 3 inspection requirements (for Risk Category IV structures). The leadership of the standard committee was contacted. They indicated that there are no requirements because veneers are covered under Part 4: Prescriptive Design Methods, and for prescriptive design there is never any Level 3 inspection requirement according to Table 3.1 of TMS 402-22. Although veneer is covered in Part 4, Chapter 13 of TMS 402-22, in Section 13.2.3, there is Engineered Design of Anchored Masonry Veneer and in Section 13.3.3, there is Engineered Design of Adhered Masonry Veneer. Engineered Design is covered in Part 3 of the standard, and for Part 3, Engineered Design, there are Level 3 inspection requirements in Table 3.1 of TMS 402-22. Upon further discussion, the leadership of the standard committee suggested to keep inspection Periodic for all Risk Category structures.

P2# 519087 - DSSC DLA Repair Building 27
Columbus, OH

SECTION 01 50 00

TEMPORARY CONSTRUCTION FACILITIES AND CONTROLS
11/20, CHG 3: 08/24

PART 1 GENERAL

1.1 REFERENCES

The publications listed below form a part of this specification to the extent referenced. The publications are referred to within the text by the basic designation only.

AMERICAN WATER WORKS ASSOCIATION (AWWA)

AWWA C511	(2017; R 2021) Reduced-Pressure Principle Backflow Prevention Assembly

NATIONAL FIRE PROTECTION ASSOCIATION (NFPA)

NFPA 70	(2023) National Electrical Code
NFPA 241	(2022) Standard for Safeguarding Construction, Alteration, and Demolition Operations

U.S. ARMY CORPS OF ENGINEERS (USACE)

EM 385-1-1	(2024) Safety -- Safety and Occupational Health (SOH) Requirements

U.S. FEDERAL HIGHWAY ADMINISTRATION (FHWA)

MUTCD	(2009; Rev 2012) Manual on Uniform Traffic Control Devices

1.2 SUBMITTALS

Government approval is required for submittals with a "G" or "S" classification. Submittals not having a "G" or "S" classification are for information only. When used, a code following the "G" classification identifies the office that will review the submittal for the Government. Submit the following in accordance with Section 01 33 00 SUBMITTAL PROCEDURES:

SD-01 Preconstruction Submittals

Construction Site Plan; G,

Traffic Control Plan; G,

Contractor Computer Cybersecurity Compliance Statements; G,

Contractor Temporary Network Cybersecurity Compliance Statements; G,

SD-06 Test Reports

Backflow Preventer Tests

SD-07 Certificates

Backflow Tester Certification

Backflow Preventers Certificate of Full Approval

1.3 CONSTRUCTION SITE PLAN

Prior to the start of work, submit for Government approval a site plan showing the locations and dimensions of temporary facilities (including layouts and details, equipment and material storage area (onsite and offsite), and access and haul routes, avenues of ingress/egress to the fenced area and details of the fence installation. Identify any areas which may have to be graveled to prevent the tracking of mud. Indicate if the use of a supplemental or other staging area is desired. Show locations of safety and construction fences, site trailers, construction entrances, trash dumpsters, temporary sanitary facilities, and worker parking areas.

1.4 BACKFLOW PREVENTERS CERTIFICATE

1.4.1 Backflow Tester Certificate

Prior to testing, submit to the Contracting Officer certification issued by the State or local regulatory agency attesting that the backflow tester has successfully completed a certification course sponsored by the regulatory agency. Tester must not be affiliated with a company participating in other phases of this Contract.

1.4.2 Backflow Prevention Training Certificate

Submit a certificate recognized by the State or local authority that states the Contractor has completed at least 10 hours of training in backflow preventer installations. The certificate must be current.

1.5 DOD CONDITION OF READINESS (COR)

DOD will set the Condition of Readiness (COR) based on the weather forecast for sustained winds 50 knots (58 mph) or greater. Contact the Contracting Officer for the current COR setting.

Monitor weather conditions a minimum of twice a day and take appropriate actions according to the approved Emergency Plan in the accepted Accident Prevention Plan, EM 385-1-1 Emergency Plan requirements and the instructions below.

Unless otherwise directed by the Contracting Officer, comply with:

a. Condition FOUR (Sustained winds of 58 mph or greater expected within 72 hours): Normal daily jobsite cleanup and good housekeeping practices. Collect and store in piles or containers scrap lumber, waste material, and rubbish for removal and disposal at the close of each work day. Maintain the construction site including storage areas, free of accumulation of debris. Stack form lumber in neat piles less than 3.3 feet high. Remove all debris, trash, or objects that could become missile hazards. Review requirements pertaining to

"Condition THREE" and continue action as necessary to attain "Condition FOUR" readiness. Contact Contracting Officer for weather and COR updates and completion of required actions.

b. Condition THREE (Sustained winds of 58 mph or greater expected within 48 hours): Maintain "Condition FOUR" requirements and commence securing operations necessary for "Condition ONE" which cannot be completed within 18 hours. Cease all routine activities which might interfere with securing operations. Commence securing and stow all gear and portable equipment. Make preparations for securing buildings. Reinforce or remove formwork and scaffolding. Secure machinery, tools, equipment, materials, or remove from the jobsite. Expend every effort to clear all missile hazards and loose equipment from general base areas. Contact Contracting Officer for weather and COR updates and completion of required actions. Review requirements pertaining to "Condition TWO" and continue action as necessary to attain "Condition THREE" readiness.

c. Condition TWO (Sustained winds of 58 mph or greater expected within 24 hours): Secure the jobsite, and leave Government premises.

d. Condition ONE. (Sustained winds of 58 mph or greater expected within 12 hours): Contractor access to the jobsite and Government premises is prohibited.

1.6 CYBERSECURITY DURING CONSTRUCTION

{For Reference Only: This subpart (and its subparts) relates to AC-18, SA-3, CCI-00258.} Meet the following requirements throughout the construction process.

1.6.1 Contractor Computer Equipment

Contractor owned computers may be used for construction. When used, contractor computers must meet the following requirements:

1.6.1.1 Operating System

The operating system must be an operating system currently supported by the manufacturer of the operating system. The operating system must be current on security patches and operating system manufacturer required updates.

1.6.1.2 Anti-Malware Software

The computer must run anti-malware software from a reputable software manufacturer. Anti-malware software must be a version currently supported by the software manufacturer, must be current on all patches and updates, and must use the latest definitions file. All computers used on this project must be scanned using the installed software at least once per day.

1.6.1.3 Passwords and Passphrases

The passwords and passphrases for all computers must be changed from their default values. Passwords must be a minimum of eight characters with a minimum of one uppercase letter, one lowercase letter, one number and one special character.

1.6.1.4 Contractor Computer Cybersecurity Compliance Statements

Provide a single submittal containing completed Contractor Computer Cybersecurity Compliance Statements for each company using contractor owned computers. Contractor Computer Cybersecurity Compliance Statements must use the template published at https://www.wbdg.org/ffc/dod/unified-facilities-guide-specifications-ufgs/ufgs-01-50-0 Each Statement must be signed by a cybersecurity representative for the relevant company.

1.6.2 Temporary IP Networks

Temporary Contractor-installed IP networks may be used during construction. When used, temporary contractor-installed IP networks must meet the following requirements:

1.6.2.1 Network Boundaries and Connections

The network must not extend outside the project site and must not connect to any IP network other than IP networks provided under this project or Government furnished IP networks provided for this purpose. Any and all network access from outside the project site is prohibited.

1.6.3 Government Access to Network

Government personnel, as defined, prescribed, and identified by the Contracting Officer, must be allowed to have complete and immediate access to the network at any time in order to verify compliance with this specification. If there is a Government agency responsible for network access, identify that agency.

1.6.4 Temporary Wireless IP Networks

1.6.4.1 Contractor Provided Wi-Fi Network

Provide standalone Wi-Fi network for authorized Government personnel. Network access must be available throughout the jobsite and for the entire Contract period. The Government will use the Wi-Fi service for coordination in the field and related activities. Do not attach or connect the temporary Wi-Fi network to Government networks or systems unrelated to construction activities.

Password information must adhere to requirements outlined in Paragraph PASSWORDS AND PASSPHRASES. Provide password and Wi-Fi network name (SSID) to the Contracting Officer for Government personnel access. Wi-Fi performance must be capable of handling bandwidth to support Government and Contractor activities, including drawing and model access onsite. Provide a point of contact for reporting Wi-Fi outages.

1.6.4.2 Temporary Wireless IP Networks Security

In addition to the other requirements on temporary IP networks, temporary wireless IP (WiFi) networks must not interfere with existing wireless network and must use WPA2 security. Network names (SSID) for wireless networks must be changed from their default values.

1.6.5 Passwords and Passphrases

The passwords and passphrases for all network devices and network access

must be changed from their default values. Passwords must be a minimum 8 characters with a minimum of one uppercase letter, one lowercase letter, one number and one special character.

1.6.6 Contractor Temporary Network Cybersecurity Compliance Statements

Provide a single submittal containing completed Contractor Temporary Network Cybersecurity Compliance Statements for each company implementing a temporary IP network. Contractor Temporary Network Cybersecurity Compliance Statements must use the template published at https://www.wbdg.org/ffc/dod/unified-facilities-guide-specifications-ufgs/ufgs-01-50-0 Each Statement must be signed by a cybersecurity representative for the relevant company. If no temporary IP networks will be used, provide a single copy of the Statement indicating this.

PART 2 PRODUCTS

2.1 TEMPORARY SIGNAGE

2.1.1 Bulletin Board

Within 30 calendar days of mobilization and prior to the commencement of work activities, provide a clear weatherproof covered bulletin board not less than 36 by 48 inches in size for displaying the Equal Employment Opportunity poster, a copy of the wage decision contained in the Contract, Wage Rate Information poster, Safety and Health Information as required by EM 385-1-1 Chapter 2 and other information approved by the Contracting Officer. Coordinate requirements herein with 01 35 26 GOVERNMENTAL SAFETY REQUIREMENTS. Locate the bulletin board at the project site in a conspicuous place easily accessible to all employees, and in location as approved by the Contracting Officer.

2.1.2 Project Identification Signs

The requirements for the signs, their content, and location are as indicated. Erect signs within 15 days after receipt of the notice to proceed. Correct the data required by the safety sign daily, with light colored metallic or non-metallic numerals.

2.1.3 Warning Signs

Post temporary signs, tags, and labels to give workers and the public adequate warning and caution of construction hazards according to the EM 385-1-1 Chapter 04. Attach signs to the perimeter fencing every 150 feet warning the public of the presence of construction hazards. Signs must require unauthorized persons to keep out of the construction site. Correct the data required by safety signs daily. Post signs at all points of entry designating the construction site as a hard hat area.

2.2 TEMPORARY TRAFFIC CONTROL

2.2.1 Barricades

Erect and maintain temporary barricades to limit public access to hazardous areas. Barricades are required whenever safe public access to paved areas such as roads, parking areas or sidewalks is prevented by construction activities or as otherwise necessary to ensure the safety of both pedestrian and vehicular traffic. Securely place barricades clearly visible with adequate illumination to provide sufficient visual warning of

the hazard during both day and night.

2.3 FENCING

Provide fencing along the construction site and at all open excavations and tunnels to control access by unauthorized personnel. Safety fencing must be highly visible to be seen by pedestrians and vehicular traffic. All fencing must meet the requirements of EM 385-1-1. Remove the fence upon completion and acceptance of the work.

2.3.1 Polyethylene Mesh Safety Fencing

Temporary safety fencing must be a high visibility orange colored, high density polyethylene grid, a minimum of 48 inches high and maximum mesh size of 2 inches. Fencing must extend from the grade to a minimum of 48 inches above the grade and be tightly secured to T-posts spaced as necessary to maintain a rigid and taut fence. Fencing must remain rigid and taut with a minimum of 200 pounds of force exerted on it from any direction with less than 4 inches of deflection.

2.3.2 Chain Link Panel Fencing

Temporary panel fencing must be galvanized steel chain link panels 6 feet high. Multiple fencing panels may be linked together at the bases to form long spans as needed. Each panel base must be weighted down using sand bags or other suitable materials in order for the fencing to withstand anticipated winds while remaining upright. Fencing must remain rigid and taut with a minimum of 200 pounds of force exerted on it from any direction with less than 4 inches of deflection.

2.3.3 Post-Driven Chain Link Fencing

Temporary post-driven fencing must be galvanized chain link fencing 6 feet high supported by an tightly secured to galvanized steel posts driven below grade. Fence posts must be located on minimum 10 foot centers. Posts may be set in various surfaces such as sand, soil, asphalt or concrete as necessary. Chain link fencing must remain rigid and taut with a minimum of 200 pounds of force exerted on it from any direction with less than 4 inches of deflection. Completely remove fencing and posts at the completion of construction and restore surfaces disturbed or damaged to its original condition. Locate and identify underground utilities prior to setting fence posts. Equip fence with a lockable gate. Gate must remain locked when construction personnel are not present.

2.4 TEMPORARY WIRING

Provide temporary wiring in accordance with EM 385-1-1 Chapter 11, NFPA 241 and NFPA 70. Include monthly inspection and testing of all equipment and apparatus.

2.5 BACKFLOW PREVENTERS

Certificate of Full Approval from FCCCHR List, University of Southern California, attesting that the design, size and make of each backflow preventer has satisfactorily passed the complete sequence of performance testing and evaluation for the respective level of approval. Certificate of Provisional Approval is not acceptable.

Reduced pressure principle type conforming to the applicable requirements

AWWA C511. Provide backflow preventers complete with 150 pound flanged , ductile iron, brassmounted gate valve and strainer, 304 stainless steel or bronze, internal parts.

PART 3 EXECUTION

3.1 EMPLOYEE PARKING

Construction Contract employees must park privately owned vehicles in an area designated by the Contracting Officer. Employee parking must not interfere with existing and established parking requirements of the Government installation.

3.2 AVAILABILITY AND USE OF UTILITY SERVICES

3.2.1 Temporary Utilities

Provide temporary utilities required for construction. Materials may be new or used, must be adequate for the required usage, not create unsafe conditions, and not violate applicable codes and standards.

3.2.2 Sanitation

Provide and maintain within the construction area minimum field-type sanitary facilities in accordance with EM 385-1-1 Chapter 35. Locate the facilities behind the construction fence or out of the public view. Clean units and empty wastes at least once a week or more frequently into a municipal, district, or station sanitary sewage system, or remove waste to a commercial facility. Obtain approval from the system owner prior to discharge into a municipal, district, or commercial sanitary sewer system. Penalties or fines associated with improper discharge will be the responsibility of the Contractor. Coordinate with the Contracting Officer and follow station regulations and procedures when discharging into the station sanitary sewer system. Maintain these conveniences at all times. Include provisions for pest control and elimination of odors. Government toilet facilities will not be available to Contractor's personnel.

3.2.3 Fire Protection

Provide temporary fire protection equipment for the protection of personnel and property during construction. Remove debris and flammable materials weekly to minimize potential hazards.

3.3 TRAFFIC PROVISIONS

3.3.1 Maintenance of Traffic

a. Conduct operations in a manner that will not close a thoroughfare or interfere with traffic on railways or highways except with written permission of the Contracting Officer at least 15 calendar days prior to the proposed modification date, and provide a Traffic Control Plan for Government approval detailing the proposed controls to traffic movement for approval. The plan must be in accordance with State and local regulations and the MUTCD, Part VI. Make all notifications and obtain all permits required for modification to traffic movements outside Station's jurisdiction.. Contractor may move oversized and slow-moving vehicles to the worksite provided requirements of the highway authority have been met.

b. Conduct work so as to minimize obstruction of traffic, and maintain traffic on at least half of the roadway width at all times. Obtain approval from the Contracting Officer prior to starting any activity that will obstruct traffic.

c. Provide, erect, and maintain, at Contractor's expense, lights, barriers, signals, passageways, detours, Life Safety Signage, overhead protection, and other items that may be required by the authority having jurisdiction.

d. Provide cones, signs, barricades, lights, or other traffic control devices and personnel required to control traffic. Do not use foil-backed material for temporary pavement marking because of its potential to conduct electricity during accidents involving downed power lines.

3.3.2 Protection of Traffic

Maintain and protect traffic on all affected roads during the construction period except as otherwise specifically directed by the Contracting Officer. Measures for the protection and diversion of traffic, including the provision of watchmen and flagmen, erection of barricades, placing of lights around and in front of equipment the work, and the erection and maintenance of adequate warning, danger, and direction signs, will be as required by the State and local authorities having jurisdiction. Provide self-illuminated (lighted) barricades during hours of darkness. All personnel working in roadways will wear brightly-colored vests or other high visibility apparel in accordance with EM 385-1-1. Protect the traveling public from damage to person and property. Minimize the interference with public traffic on roads selected for hauling material to and from the site. Investigate the adequacy of existing roads and their allowable load limit. Contractor is responsible for the repair of damage to roads caused by construction operations.

3.3.3 Rush Hour Restrictions

Do not interfere with the peak traffic flows preceding and during normal operations without notification to and approval by the Contracting Officer.

3.3.4 Dust Control

Dust control methods and procedures must be approved by the Contracting Officer. Coordinate dust control methods with 01 57 19. 00 06 TEMPORARY ENVIRONMENTAL CONTROLS.

3.4 REDUCED PRESSURE BACKFLOW PREVENTERS

Provide an approved reduced pressure backflow prevention assembly at each location where the Contractor taps into the Government potable water supply.

Perform backflow preventer tests using test equipment, procedures, and certification forms conforming to those outlined in the latest edition of the Manual of Cross-Connection Control published by the FCCCHR Manual. Test and tag each reduced pressure backflow preventer upon initial installation (prior to continued water use) and monthly thereafter. Tag must contain the following information: make, model, serial number, dates of tests, results, maintenance performed, and signature of tester.

Record test results on certification forms conforming to requirements cited earlier in this paragraph.

3.5 CONTRACTOR'S TEMPORARY FACILITIES

Temporary facilities must meet requirements as identified in EM 385-1-1 Chatper 04

Contractor is responsible for security of their property. Provide adequate outside security lighting at the temporary facilities. Trailers must be anchored to resist high winds and meet applicable state or local standards for anchoring mobile trailers. Coordinate anchoring with EM 385-1-1 Chapter 04. The Contract Clause entitled "FAR 52.236-10, Operations and Storage Areas" and the following apply:

3.5.1 Quality Control Manager Records and Field Office

Provide on the jobsite an office with approximately 200 square feet of useful floor area for the exclusive use of the QC Manager. Provide a weathertight structure with adequate heating and cooling, toilet facilities, lighting, ventilation, a 4 by 8 foot plan table, a standard size office desk and chair, computer station, and working communications facilities. Provide either a 1,500 watt radiant heater and a window-mounted air conditioner rated at 9,000 Btus minimum or a window-mounted heat pump of the same minimum heating and cooling ratings. Provide a door with a cylinder lock and windows with locking hardware. Make utility connections. Locate as directed. File quality control records in the office and make available at all times to the Government. After completion of the work, remove the entire structure from the site.

3.5.2 Storage Area

Construct a temporary 6 foot high chain link fence around trailers and materials. Include plastic strip inserts, colored brown, so that visibility through the fence is obstructed. Fence posts may be driven, in lieu of concrete bases, where soil conditions permit. Do not place or store trailers, materials, or equipment outside the fenced area unless such trailers, materials, or equipment are assigned a separate and distinct storage area by the Contracting Officer away from the vicinity of the construction site but within the installation boundaries. Trailers, equipment, or materials must not be open to public view with the exception of those items which are in support of ongoing work on the current day. Do not stockpile materials outside the fence in preparation for the next day's work. Park mobile equipment, such as tractors, wheeled lifting equipment, cranes, trucks, and like equipment within the fenced area at the end of each work day.

Keep fencing in a state of good repair and proper alignment. If the Contractor elects to traverse grassed or unpaved areas which are not established roadways with construction equipment or other vehicles, cover the grassed or unpaved areas with a layer of gravel as necessary to prevent rutting and the tracking of mud onto paved or established roadways; gravel gradation must be at the Contractor's discretion. Mow and maintain grass located within the boundaries of the construction site for the duration of the project. Grass and vegetation along fences, structures, under trailers, and in areas not accessible to mowers must be edged or trimmed neatly.

3.5.3 Supplemental Storage Area

Upon request, and pending availability, the Contracting Officer will designate another or supplemental area for the use and storage of trailers, equipment, and materials. This area may not be in close proximity of the construction site but will be within the installation boundaries. Maintain the area in a clean and orderly fashion and secured if needed to protect supplies and equipment. Utilities will not be provided to this area by the Government.

3.5.4 Appearance of Trailers

a. Trailers must be roadworthy and comply with all appropriate state and local vehicle requirements. Trailers which are rusted, have peeling paint or are otherwise in need of repair will not be allowed on Installation property. Trailers must present a clean and neat exterior appearance and be in a state of good repair.

b. Maintain the temporary facilities. Failure to do so will be sufficient reason to require their removal at the Contractor's expense.

3.5.5 Safety Systems

Protect the integrity of all installed safety systems or personnel safety devices. Obtain prior approval from the Contracting Officer if entrance into systems serving safety devices is required. If it is temporarily necessary to remove or disable personnel safety devices in order to accomplish Contract requirements, provide alternative means of protection prior to removing or disabling any permanently installed safety devices or equipment and obtain approval from the Contracting Officer.

3.5.6 Weather Protection of Temporary Facilities and Stored Materials

Take necessary precautions to ensure that roof openings and other critical openings in the building are monitored carefully. Take immediate actions required to seal off such openings when rain or other detrimental weather is imminent, and at the end of each workday. Ensure that the openings are completely sealed off to protect materials and equipment in the building from damage.

3.5.6.1 Building and Site Storm Protection

When a warning of gale force winds is issued, take precautions to minimize danger to persons, and protect the work and nearby Government property. Precautions must include, but are not limited to, closing openings; removing loose materials, tools and equipment from exposed locations; and removing or securing scaffolding and other temporary work. Close openings in the work when storms of lesser intensity pose a threat to the work or any nearby Government property.

3.6 TEMPORARY PROJECT SAFETY FENCING

As soon as practicable, but not later than 15 days after the date established for commencement of work, furnish and erect temporary project safety fencing at the work site. Maintain the safety fencing during the life of the Contract and, upon completion and acceptance of the work, remove from the work site.

3.7 CLEANUP

Remove construction debris, waste materials, packaging material and the like from the work site daily. Any dirt or mud which is tracked onto paved or surfaced roadways must be cleaned away. Store all salvageable materials resulting from demolition activities within the fenced area described above or at the supplemental storage area. Neatly stack stored materials not in trailers, whether new or salvaged.

3.8 RESTORATION OF STORAGE AREA

Upon completion of the project remove the bulletin board, signs, barricades, haul roads, and all other temporary products from the site. After removal of trailers, materials, and equipment from within the fenced area, remove the fence. Restore areas used during the performance of the Contract to the original or better condition. Remove gravel used to traverse grassed areas and restore the area to its original condition, including top soil and seeding as necessary.

-- End of Section --

P2# 519087 - DSSC DLA Repair Building 27
Columbus, OH

SECTION 01 57 19.00 06

TEMPORARY ENVIRONMENTAL CONTROLS AND PERMITS
04/20

PART 1 GENERAL

1.1 REFERENCES

The publications listed below form a part of this specification to the extent referenced. The publications are referred to within the text by the basic designation only.

U.S. ARMY CORPS OF ENGINEERS (USACE)

EM 385-1-1	(2014) Safety and Health Requirements Manual
ER 200-2-2	(1988) Environmental Quality - Procedures for Implementing NEPA
WETLANDS DELINEATION MANUAL	(1987) Corps of Engineers Wetlands Delineation Manual
Wetland Supplement	Regional Supplement to the Corps of Engineers Wetland Delineation Manual; Midwest Region (Version 2.0) April 2010 ERDC/R; TR-10-16

U.S. NATIONAL ARCHIVES AND RECORDS ADMINISTRATION (NARA)

29 CFR 1910	Occupational Safety and Health Standards
29 CFR 1910.120	Hazardous Waste Operations and Emergency Response
29 CFR 1915	Confined and Enclosed Spaces and Other Dangerous Atmospheres in Shipyard Employment
29 CFR 1926	Safety and Health Regulations for Construction
29 CFR 1926.1101	Asbestos
29 CFR 1926.62	Lead
40 CFR 112	Oil Pollution Prevention
40 CFR 152	Pesticide Registration and Classification Procedures
40 CFR 152 - 186	Pesticide Programs
40 CFR 241	Guidelines for Disposal of Solid Waste
40 CFR 243	Guidelines for the Storage and Collection

	of Residential, Commercial, and Institutional Solid Waste
40 CFR 258	Subtitle D Landfill Requirements
40 CFR 260	Hazardous Waste Management System: General
40 CFR 261	Identification and Listing of Hazardous Waste
40 CFR 261.7	Residues of Hazardous Waste in Empty Containers
40 CFR 262	Standards Applicable to Generators of Hazardous Waste
40 CFR 262.31	Standards Applicable to Generators of Hazardous Waste-Labeling
40 CFR 263	Standards Applicable to Transporters of Hazardous Waste
40 CFR 264	Standards for Owners and Operators of Hazardous Waste Treatment, Storage, and Disposal Facilities
40 CFR 265	Interim Status Standards for Owners and Operators of Hazardous Waste Treatment, Storage, and Disposal Facilities
40 CFR 266	Standards for the Management of Specific Hazardous Wastes and Specific Types of Hazardous Waste Management Facilities
40 CFR 268	Land Disposal Restrictions
40 CFR 273	Standards for Universal Waste Management
40 CFR 273.2	Standards for Universal Waste Management - Batteries
40 CFR 273.4	Standards for Universal Waste Management - Mercury Containing Equipment
40 CFR 273.5	Standards for Universal Waste Management - Lamps
40 CFR 279	Standards for the Management of Used Oil
40 CFR 300	National Oil and Hazardous Substances Pollution Contingency Plan
40 CFR 300.125	National Oil and Hazardous Substances Pollution Contingency Plan - Notification and Communications
40 CFR 355	Emergency Planning and Notification
40 CFR 372-SUBPART D	Specific Toxic Chemical Listings

40 CFR 50	National Primary and Secondary Ambient Air Quality Standards
40 CFR 60	Standards of Performance for New Stationary Sources
40 CFR 61	National Emission Standards for Hazardous Air Pollutants
40 CFR 63	National Emission Standards for Hazardous Air Pollutants for Source Categories
40 CFR 64	Compliance Assurance Monitoring
40 CFR 745	Lead-Based Paint Poisoning Prevention in Certain Residential Structures
40 CFR 761	Polychlorinated Biphenyls (PCBs) Manufacturing, Processing, Distribution in Commerce, and Use Prohibitions
40 CFR 82	Protection of Stratospheric Ozone
49 CFR 171	General Information, Regulations, and Definitions
49 CFR 172	Hazardous Materials Table, Special Provisions, Hazardous Materials Communications, Emergency Response Information, and Training Requirements
49 CFR 172.101	Hazardous Material Regulation-Purpose and Use of Hazardous Material Table
49 CFR 173	Shippers - General Requirements for Shipments and Packagings
49 CFR 178	Specifications for Packagings

1.2 DEFINITIONS

1.2.1 Class I and II Ozone Depleting Substance (ODS)

Class I ODS is defined in Section 602(a) of The Clean Air Act. A list of Class I ODS can be found on the EPA website at the following weblink. http://www.epa.gov/ozone/science/ods/classone.html.

Class II ODS is defined in Section 602(s) of The Clean Air Act. A list of Class II ODS can be found on the EPA website at the following weblink. http://www.epa.gov/ozone/science/ods/classtwo.html.

1.2.2 Contractor Generated Hazardous Waste

Contractor generated hazardous waste is materials that, if abandoned or disposed of, may meet the definition of a hazardous waste. These waste streams would typically consist of material brought on site by the Contractor to execute work, but are not fully consumed during the course of construction. Examples include, but are not limited to, excess paint

thinners (i.e. methyl ethyl ketone, toluene), waste thinners, excess paints, excess solvents, waste solvents, excess pesticides, and contaminated pesticide equipment rinse water.

1.2.3 Electronics Waste

Electronics waste is discarded electronic devices intended for salvage, recycling, or disposal.

1.2.4 Environmental Pollution and Damage

Environmental pollution and damage is the presence of chemical, physical, or biological elements or agents which adversely affect human health or welfare; unfavorably alter ecological balances of importance to human life; affect other species of importance to humankind; or degrade the environment aesthetically, culturally or historically.

1.2.5 Environmental Protection

Environmental protection is the prevention/control of pollution and habitat disruption that may occur to the environment during construction. The control of environmental pollution and damage requires consideration of land, water, and air; biological and cultural resources; and includes management of visual aesthetics; noise; solid, chemical, gaseous, and liquid waste; radiant energy and radioactive material as well as other pollutants.

1.2.6 Hazardous Debris

As defined in paragraph SOLID WASTE, debris that contains listed hazardous waste (either on the debris surface, or in its interstices, such as pore structure) in accordance with 40 CFR 261. Hazardous debris also includes debris that exhibits a characteristic of hazardous waste in accordance with 40 CFR 261.

1.2.7 Hazardous Materials

Hazardous materials as defined in 49 CFR 171 and listed in 49 CFR 172.

Hazardous material is any material that: Is regulated as a hazardous material in accordance with 49 CFR 173; or requires a Safety Data Sheet (SDS) in accordance with 29 CFR 1910.120; or during end use, treatment, handling, packaging, storage, transportation, or disposal meets or has components that meet or have potential to meet the definition of a hazardous waste as defined by 40 CFR 261 Subparts A, B, C, or D. Designation of a material by this definition, when separately regulated or controlled by other sections or directives, does not eliminate the need for adherence to that hazard-specific guidance which takes precedence over this section for "control" purposes. Such material includes ammunition, weapons, explosive actuated devices, propellants, pyrotechnics, chemical and biological warfare materials, medical and pharmaceutical supplies, medical waste and infectious materials, bulk fuels, radioactive materials, and other materials such as asbestos, mercury, and polychlorinated biphenyls (PCBs).

1.2.8 Hazardous Waste

Hazardous Waste is any material that meets the definition of a solid waste and exhibit a hazardous characteristic (ignitability, corrosivity,

reactivity, or toxicity) as specified in 40 CFR 261, Subpart C, or contains a listed hazardous waste as identified in 40 CFR 261, Subpart D.

1.2.9 Installation Pest Management Coordinator

Installation Pest Management Coordinator (IPMC) is the individual officially designated by the Installation Commander to oversee the Installation Pest Management Program and the Installation Pest Management Plan.

1.2.10 Land Application

Land Application means spreading or spraying discharge water at a rate that allows the water to percolate into the soil. No sheeting action, soil erosion, discharge into storm sewers, discharge into defined drainage areas, or discharge into the "waters of the United States" must occur. Comply with federal, state, and local laws and regulations.

1.2.11 Municipal Separate Storm Sewer System (MS4) Permit

MS4 permits are those held by installations to obtain NPDES permit coverage for their stormwater discharges.

1.2.12 National Pollutant Discharge Elimination System (NPDES)

The NPDES permit program controls water pollution by regulating point sources that discharge pollutants into waters of the United States.

1.2.13 Oily Waste

Oily waste are those materials that are, or were, mixed with Petroleum, Oils, and Lubricants (POLs) and have become separated from that POLs. Oily wastes also means materials, including wastewaters, centrifuge solids, filter residues or sludges, bottom sediments, tank bottoms, and sorbents which have come into contact with and have been contaminated by, POLs and may be appropriately tested and discarded in a manner which is in compliance with other state and local requirements.

This definition includes materials such as oily rags, "kitty litter" sorbent clay and organic sorbent material. These materials may be land filled provided that: It is not prohibited in other state regulations or local ordinances; the amount generated is "de minimus" (a small amount); it is the result of minor leaks or spills resulting from normal process operations; and free-flowing oil has been removed to the practicable extent possible. Large quantities of this material, generated as a result of a major spill or in lieu of proper maintenance of the processing equipment, are a solid waste. As a solid waste, perform a hazardous waste determination prior to disposal. As this can be an expensive process, it is recommended that this type of waste be minimized through good housekeeping practices and employee education.

1.2.14 Pesticide

Pesticide is any substance or mixture of substances intended for preventing, destroying, repelling, or mitigating any pest, or intended for use as a plant regulator, defoliant or desiccant.

1.2.15 Pesticide Treatment Plan

A plan for the prevention, monitoring, and control to eliminate pest infestation.

1.2.16 Pests

Pests are arthropods, birds, rodents, nematodes, fungi, bacteria, viruses, algae, snails, marine borers, snakes, weeds and other organisms (except for human or animal disease-causing organisms) that adversely affect readiness, military operations, or the well-being of personnel and animals; attack or damage real property, supplies, equipment, or vegetation; or are otherwise undesirable.

1.2.17 Project Pesticide Coordinator

The Project Pesticide Coordinator (PPC) is an individual who resides at a Civil Works Project office and who is responsible overseeing of pesticide application on project grounds.

1.2.18 Regulated Waste

Regulated waste are solid wastes that have specific additional federal, state, or local controls for handling, storage, or disposal.

1.2.19 Sediment

Sediment is soil and other debris that have eroded and have been transported by runoff water or wind.

1.2.20 Solid Waste

Solid waste is a solid, liquid, semi-solid or contained gaseous waste. A solid waste can be a hazardous waste, non-hazardous waste, or non-Resource Conservation and Recovery Act (RCRA) regulated waste. Types of solid waste typically generated at construction sites may include:

1.2.20.1 Debris

Debris is non-hazardous solid material generated during the construction, demolition, or renovation of a structure that exceeds 2.5-inch particle size that is: a manufactured object; plant or animal matter; or natural geologic material (for example, cobbles and boulders), broken or removed concrete, masonry, and rock asphalt paving; ceramics; roofing paper and shingles. Inert materials may not be reinforced with or contain ferrous wire, rods, accessories and weldments. A mixture of debris and other material such as soil or sludge is also subject to regulation as debris if the mixture is comprised primarily of debris by volume, based on visual inspection.

1.2.20.2 Green Waste

Green waste is the vegetative matter from landscaping, land clearing and grubbing, including, but not limited to, grass, bushes, scrubs, small trees and saplings, tree stumps and plant roots. Marketable trees, grasses and plants that are indicated to remain, be re-located, or be re-used are not included.

1.2.20.3 Material not regulated as solid waste

Material not regulated as solid waste is nuclear source or byproduct materials regulated under the Federal Atomic Energy Act of 1954 as amended; suspended or dissolved materials in domestic sewage effluent or irrigation return flows, or other regulated point source discharges; regulated air emissions; and fluids or wastes associated with natural gas or crude oil exploration or production.

1.2.20.4 Non-Hazardous Waste

Non-hazardous waste is waste that is excluded from, or does not meet, hazardous waste criteria in accordance with 40 CFR 263.

1.2.20.5 Recyclables

Recyclables are materials, equipment and assemblies such as doors, windows, door and window frames, plumbing fixtures, glazing and mirrors that are recovered and sold as recyclable, and structural components. It also includes commercial-grade refrigeration equipment with Freon removed, household appliances where the basic material content is metal, clean polyethylene terephthalate bottles, cooking oil, used fuel oil, textiles, high-grade paper products and corrugated cardboard, stackable pallets in good condition, clean crating material, and clean rubber/vehicle tires. Metal meeting the definition of lead contaminated or lead based paint contaminated may not be included as recyclable if sold to a scrap metal company. Paint cans that meet the definition of empty containers in accordance with 40 CFR 261.7 may be included as recyclable if sold to a scrap metal company.

1.2.20.6 Surplus Soil

Surplus soil is existing soil that is in excess of what is required for this work, including aggregates intended, but not used, for on-site mixing of concrete, mortars, and paving. Contaminated soil meeting the definition of hazardous material or hazardous waste is not included and must be managed in accordance with paragraph HAZARDOUS MATERIAL MANAGEMENT.

1.2.20.7 Scrap Metal

This includes scrap and excess ferrous and non-ferrous metals such as reinforcing steel, structural shapes, pipe, and wire that are recovered or collected and disposed of as scrap. Scrap metal meeting the definition of hazardous material or hazardous waste is not included.

1.2.20.8 Wood

Wood is dimension and non-dimension lumber, plywood, chipboard, hardboard. Treated or painted wood that meets the definition of lead contaminated or lead based contaminated paint is not included. Treated wood includes, but is not limited to, lumber, utility poles, crossties, and other wood products with chemical treatment.

1.2.21 Surface Discharge

Surface discharge means discharge of water into drainage ditches, storm sewers, creeks or "waters of the United States". Surface discharges are discrete, identifiable sources and require a permit from the governing agency. Comply with federal, state, and local laws and regulations.

1.2.22 Wastewater

Wastewater is the used water and solids from a community that flow to a treatment plant.

1.2.22.1 Stormwater

Stormwater is any precipitation in an urban or suburban area that does not evaporate or soak into the ground, but instead collects and flows into storm drains, rivers, and streams.

1.2.23 Waters of the United States

Waters of the United States means Federally jurisdictional waters, including wetlands, that are subject to regulation under Section 404 of the Clean Water Act or navigable waters, as defined under the Rivers and Harbors Act.

1.2.24 Wetlands

Wetlands are those areas that are inundated or saturated by surface or groundwater at a frequency and duration sufficient to support, and that under normal circumstances do support, a prevalence of vegetation typically adapted for life in saturated soil conditions. Official determination of whether or not an area is classified as a wetland must be done in accordance with the WETLANDS DELINEATION MANUAL and Wetland Supplement.

1.2.25 Universal Waste

The universal waste regulations streamline collection requirements for certain hazardous wastes in the following categories: batteries, pesticides, mercury-containing equipment (for example, thermostats), and lamps (for example, fluorescent bulbs). The rule is designed to reduce hazardous waste in the municipal solid waste (MSW) stream by making it easier for universal waste handlers to collect these items and send them for recycling or proper disposal. These regulations can be found at 40 CFR 273.

1.3 SUBMITTALS

Government approval is required for submittals with a "G" designation; submittals not having a "G" designation are for Contractor Quality Control approval. Submittals with an "S" are for inclusion in the Sustainability Notebook, in conformance with LRL Section 01 33 29.00 06 SUSTAINABILITY REPORTING. Submit the following in accordance with LRL Section 01 33 00.00 06 SUBMITTAL PROCEDURES:

SD-01 Preconstruction Submittals

Preconstruction Survey

Solid Waste Management Permit; G

Regulatory Notifications; G

Environmental Protection Plan; G

Dirt and Dust Control Plan; G

Employee Training Records; G

Environmental Manager Qualifications; G

SD-06 Test Reports

Laboratory Analysis

Inspection Reports

Solid Waste Management Report; G

SD-07 Certificates

Employee Training Records; G

Certificate of Competency

SD-11 Closeout Submittals

Waste Determination Documentation; G

Disposal Documentation for Hazardous and Regulated Waste; G

Assembled Employee Training Records; G

Solid Waste Management Permit; G

Solid Waste Management Report; G

Hazardous Waste/Debris Management; G

Regulatory Notifications; G

Sales Documentation; G

Contractor Certification

As-Built Topographic Survey

1.4 ENVIRONMENTAL PROTECTION REQUIREMENTS

Provide and maintain, during the life of the contract, environmental protection as defined. Plan for and provide environmental protective measures to control pollution that develops during construction practice. Plan for and provide environmental protective measures required to correct conditions that develop during the construction of permanent or temporary environmental features associated with the project. Protect the environmental resources within the project boundaries and those affected outside the limits of permanent work during the entire duration of this

Contract. Comply with federal, state, and local regulations pertaining to the environment, including water, air, solid waste, hazardous waste and substances, oily substances, and noise pollution.

Tests and procedures assessing whether construction operations comply with Applicable Environmental Laws may be required. Analytical work must be performed by qualified laboratories; and where required by law, the laboratories must be certified.

1.4.1 Conformance with the Environmental Management System

Perform work under this contract consistent with the policy and objectives identified in the installation's Environmental Management System (EMS). Perform work in a manner that conforms to objectives and targets of the environmental programs and operational controls identified by the EMS. Support Government personnel when environmental compliance and EMS audits are conducted by escorting auditors at the Project site, answering questions, and providing proof of records being maintained. Provide monitoring and measurement information as necessary to address environmental performance relative to environmental, energy, and transportation management goals. In the event an EMS nonconformance or environmental noncompliance associated with the contracted services, tasks, or actions occurs, take corrective and preventative actions. In addition, employees must be aware of their roles and responsibilities under the installation EMS and of how these EMS roles and responsibilities affect work performed under the contract.

Coordinate with the installation's EMS coordinator to identify training needs associated with environmental aspects and the EMS, and arrange training or take other action to meet these needs. Provide training documentation to the Contracting Officer. The Installation Environmental Office will retain associated environmental compliance records. Make EMS Awareness training completion certificates available to Government auditors during EMS audits and include the certificates in the Employee Training Records. See paragraph EMPLOYEE TRAINING RECORDS.

1.5 SPECIAL ENVIRONMENTAL REQUIREMENTS

Comply with the special environmental requirements listed here and attached at the end of this section.

1.6 QUALITY ASSURANCE

1.6.1 Preconstruction Survey and Protection of Features

This paragraph supplements the Contract FAR 52.236-9 - Protection of Existing Vegetation, Structures, Equipment, Utilities and Improvements. Prior to start of any onsite construction activities, perform a Preconstruction Survey of the project site with the Contracting Officer, and take photographs showing existing environmental conditions in and adjacent to the site. Submit a report for the record. Include in the report a plan describing the features requiring protection under the provisions of the Contract Clauses, which are not specifically identified on the drawings as environmental features requiring protection along with the condition of trees, shrubs and grassed areas immediately adjacent to the site of work and adjacent to the Contractor's assigned storage area and access route(s), as applicable. The Contractor and the Contracting Officer will sign this survey report upon mutual agreement regarding its accuracy and completeness. Protect those environmental features included

in the survey report and any indicated on the drawings, regardless of interference that their preservation may cause to the work under the Contract.

1.6.2 Regulatory Notifications

Provide regulatory notification requirements in accordance with federal, state and local regulations. In cases where the Government will also provide public notification (such as stormwater permitting), coordinate with the Contracting Officer. Submit copies of regulatory notifications to the Contracting Officer within 7 days prior to commencement of work activities. Typically, regulatory notifications must be provided for the following (this listing is not all-inclusive): demolition, renovation, NPDES defined site work, construction, removal or use of a permitted air emissions source, and remediation of controlled substances (asbestos, hazardous waste, lead paint).

1.6.3 Environmental Brief

Attend an environmental brief to be included in the preconstruction meeting. Provide the following information: types, quantities, and use of hazardous materials that will be brought onto the installation; and types and quantities of wastes/wastewater that may be generated during the Contract. Discuss the results of the Preconstruction Survey at this time.

Prior to initiating any work on site, meet with the Contracting Officer and installation Environmental Office to discuss the proposed Environmental Protection Plan (EPP). Develop a mutual understanding relative to the details of environmental protection, including measures for protecting natural and cultural resources, required reports, required permits, permit requirements (such as mitigation measures), and other measures to be taken.

1.6.4 Environmental Manager

Appoint in writing an Environmental Manager for the project site. The Environmental Manager is directly responsible for coordinating contractor compliance with federal, state, local, and installation requirements. The Environmental Manager must ensure compliance with Hazardous Waste Program requirements (including hazardous waste handling, storage, manifesting, and disposal); implement the EPP; ensure environmental permits are obtained, maintained, and closed out; ensure compliance with Stormwater Program requirements; ensure compliance with Hazardous Materials (storage, handling, and reporting) requirements; and coordinate any remediation of regulated substances (lead, asbestos, PCB transformers). This can be a collateral position; however, the person in this position must be trained to adequately accomplish the following duties: ensure waste segregation and storage compatibility requirements are met; inspect and manage Satellite Accumulation areas; ensure only authorized personnel add wastes to containers; ensure Contractor personnel are trained in 40 CFR requirements in accordance with their position requirements; coordinate removal of waste containers; and maintain the Environmental Records binder and required documentation, including environmental permits compliance and close-out. Submit Environmental Manager Qualifications to the Contracting Officer.

1.6.5 Employee Training Records

Prepare and maintain Employee Training Records throughout the term of the

contract meeting applicable 40 CFR requirements. Provide Employee Training Records in the Environmental Records Binder. Submit these Assembled Employee Training Records to the Contracting Officer at the conclusion of the project, unless otherwise directed.

Train personnel to meet state requirements. Conduct environmental protection/pollution control meetings for personnel prior to commencing construction activities. Contact additional meetings for new personnel and when site conditions change. Include in the training and meeting agenda: methods of detecting and avoiding pollution; familiarization with statutory and contractual pollution standards; installation and care of devices, vegetative covers, and instruments required for monitoring purposes to ensure adequate and continuous environmental protection/pollution control; anticipated hazardous or toxic chemicals or wastes, and other regulated contaminants; recognition and protection of archaeological sites, artifacts, waters of the United States, and endangered species and their habitat that are known to be in the area.

1.6.6 Non-Compliance Notifications

The Contracting Officer will notify the Contractor in writing of any observed noncompliance with federal, state or local environmental laws or regulations, permits, and other elements of the Contractor's EPP. After receipt of such notice, inform the Contracting Officer of the proposed corrective action and take such action when approved by the Contracting Officer. The Contracting Officer may issue an order stopping all or part of the work until satisfactory corrective action has been taken. No time extensions will be granted or equitable adjustments allowed for any such suspensions. This is in addition to any other actions the Contracting Officer may take under the contract, or in accordance with the Federal Acquisition Regulation or Federal Law.

1.7 ENVIRONMENTAL PROTECTION PLAN

The purpose of the EPP is to present an overview of known or potential environmental issues that must be considered and addressed during construction. Incorporate construction related objectives and targets from the installation's EMS into the EPP. Include in the EPP measures for protecting natural and cultural resources, required reports, and other measures to be taken. Meet with the Contracting Officer or Contracting Officer Representative to discuss the EPP and develop a mutual understanding relative to the details for environmental protection including measures for protecting natural resources, required reports, and other measures to be taken. Submit the EPP within fifteen (15) days after notice to proceed and not less than ten (10) days before the preconstruction meeting. Revise the EPP throughout the project to include any reporting requirements, changes in site conditions, or contract modifications that change the project scope of work in a way that could have an environmental impact. No requirement in this section will relieve the Contractor of any applicable federal, state, and local environmental protection laws and regulations. During Construction, identify, implement, and submit for approval any additional requirements to be included in the EPP. Maintain the current version onsite.

The EPP includes, but is not limited to, the following elements:

1.7.1 General Overview and Purpose

1.7.1.1 Descriptions

A brief description of each specific plan required by environmental permit or elsewhere in this Contract such as stormwater pollution prevention plan, solid waste management plan, wastewater management plan, air pollution control plan, contaminant prevention plan, Hazardous, Toxic and Radioactive Waste (HTRW) Plan Non-Hazardous Solid Waste Disposal Plan.

1.7.1.2 Duties

The duties and level of authority assigned to the person(s) on the job site who oversee environmental compliance, such as who is responsible for adherence to the EPP, who is responsible for spill cleanup and training personnel on spill response procedures, who is responsible for manifesting hazardous waste to be removed from the site (if applicable), and who is responsible for training the Contractor's environmental protection personnel.

1.7.1.3 Procedures

A copy of any standard or project-specific operating procedures that will be used to effectively manage and protect the environment on the project site.

1.7.1.4 Communications

Communication and training procedures that will be used to convey environmental management requirements to Contractor employees and subcontractors.

1.7.1.5 Contact Information

Emergency contact information contact information (office phone number, cell phone number, and e-mail address).

1.7.2 General Site Information

1.7.2.1 Drawings

Drawings showing locations of proposed temporary excavations or embankments for haul roads, stream crossings, jurisdictional wetlands, material storage areas, structures, sanitary facilities, storm drains and conveyances, and stockpiles of excess soil.

1.7.2.2 Work Area

Work area plan showing the proposed activity in each portion of the area and identify the areas of limited use or nonuse. Include measures for marking the limits of use areas, including methods for protection of features to be preserved within authorized work areas and methods to control runoff and to contain materials on site, and a traffic control plan.

1.7.2.3 Documentation

A letter signed by an officer of the firm appointing the Environmental Manager and stating that person is responsible for managing and

implementing the Environmental Program as described in this contract. Include in this letter the Environmental Manager's authority to direct the removal and replacement of non-conforming work. Per LRL Section 01 45 04.10 06, Contractor Quality Control and more specifically paragraph Construction Quality Control Organization, the Environmental Manager shall be included as part of the CQC organization.

1.7.3 Management of Natural Resources

a. Land resources

b. Tree protection

c. Replacement of damaged landscape features

d. Temporary construction

e. Stream crossings

f. Fish and wildlife resources

g. Wetland areas

1.7.4 Protection of Historical and Archaeological Resources

a. Objectives

b. Methods

1.7.5 Stormwater Management and Control

a. Ground cover

b. Erodible soils

c. Temporary measures

(1) Structural Practices

(2) Temporary and permanent stabilization

d. Effective selection, implementation and maintenance of Best Management Practices (BMPs).

1.7.6 Protection of the Environment from Waste Derived from Contractor Operations

Control and disposal of solid and sanitary waste. Control and disposal of hazardous waste.

If the project is located on a military installation, management procedures for hazardous waste to be generated shall be followed. The elements of those procedures will coincide with the Installation Hazardous Waste Management Plan. The Contracting Officer will provide a copy of the Installation Hazardous Waste Management Plan. For all projects, as a minimum, include the following:

a. List of the types of hazardous wastes expected to be generated

b. Procedures to ensure a written waste determination is made for appropriate wastes that are to be generated

c. Sampling/analysis plan, including laboratory method(s) that will be used for waste determinations and copies of relevant laboratory certifications

d. Methods and proposed locations for hazardous waste accumulation/storage (that is, in tanks or containers)

e. Management procedures for storage, labeling, transportation, and disposal of waste (treatment of waste is not allowed unless specifically noted)

f. Management procedures and regulatory documentation ensuring disposal of hazardous waste complies with Land Disposal Restrictions (40 CFR 268)

g. Management procedures for recyclable hazardous materials such as lead-acid batteries, used oil, and similar

h. Used oil management procedures in accordance with 40 CFR 279; Hazardous waste minimization procedures

i. Plans for the disposal of hazardous waste by permitted facilities; and Procedures to be employed to ensure required employee training records are maintained.

1.7.7 Prevention of Releases to the Environment

Procedures to prevent releases to the environment

Notifications in the event of a release to the environment

1.7.8 Regulatory Notification and Permits

List what notifications and permit applications must be made. Some permits require up to 180 days to obtain. Demonstrate that those permits have been obtained or applied for by including copies of applicable environmental permits. The EPP will not be approved until the permits have been obtained.

1.7.9 Clean Air Act Compliance

1.7.9.1 Haul Route

Submit truck and material haul routes along with a Dirt and Dust Control Plan for controlling dirt, debris, and dust on Installation roadways. As a minimum, identify in the plan the subcontractor and equipment for cleaning along the haul route and measures to reduce dirt, dust, and debris from roadways.

1.7.9.2 Pollution Generating Equipment

Identify air pollution generating equipment or processes that may require federal, state, or local permits under the Clean Air Act. Determine requirements based on any current installation permits and the impacts of the project. Provide a list of all fixed or mobile equipment, machinery or operations that could generate air emissions during the project to the

Installation Environmental Office (Air Program Manager).

1.7.9.3 Stationary Internal Combustion Engines

Identify portable and stationary internal combustion engines that will be supplied, used or serviced. Comply with 40 CFR 60 Subpart IIII, 40 CFR 60 Subpart JJJJ, 40 CFR 63 Subpart ZZZZ, and local regulations as applicable. At minimum, include the make, model, serial number, manufacture date, size (engine brake horsepower), and EPA emission certification status of each engine. Maintain applicable records and log hours of operation and fuel use. Logs must include reasons for operation and delineate between emergency and non-emergency operation.

1.7.9.4 Refrigerants

Identify management practices to ensure that heating, ventilation, and air conditioning (HVAC) work involving refrigerants complies with 40 CFR 82 requirements. Technicians must be certified, maintain copies of certification on site, use certified equipment and log work that requires the addition or removal of refrigerant. Any refrigerant reclaimed is the property of the Government, coordinate with the Installation Environmental Office to determine the appropriate turn in location.

1.7.9.5 Air Pollution-engineering Processes

Identify planned air pollution-generating processes and management control measures (including, but not limited to, spray painting, abrasive blasting, demolition, material handling, fugitive dust, and fugitive emissions). Log hours of operations and track quantities of materials used.

1.7.9.6 Monitoring

For the protection of public health, monitor and control contaminant emissions to the air from Hazardous, Toxic, and Radioactive Waste remedial action area sources to minimize short-term risks that might be posed to the community during implementation of the remedial alternative in accordance with the following.

a. Perimeter Air Contaminant of Concern (PCM fibers only). (Lead, PCBs, and mold are not airborne-regulated contaminants for the project scope).

b. Time Averaged Perimeter Action Levels

Concentration	Concentration: 0.01 fibers per cubic centimeter (f/cc) using Phase Contrast Microscopy (PCM).
Time	8-hour time-weighted average (TWA) or any single reading =0.1 f/cc.

c. Perimeter Sampling/Monitoring LocationsFour (4) downwind perimeter stations located at the building perimeter (one at each cardinal direction, adjusted daily based on wind direction). Additional stations required if work occurs at multiple elevations or openings.

d. Monitoring Instruments/Sampling and Analysis Methods

- High-volume air pumps (minimum 10 Lpm) with 25-mm, 0.8-µm MCE filters.

- Analysis by Phase Contrast Microscopy (PCM) in accordance with NIOSH Method 7400.

- On-site real-time dust monitoring (e.g., TSI DustTrak or equivalent) required at each active work area exhaust/negative pressure enclosure discharge.

- All samples analyzed by an AIHA-LAP, LLC accredited laboratory.

e. Staffing Monitoring shall be performed daily by a Competent Person (as defined by OSHA 1926.1101) trained in asbestos air monitoring. A third-party Certified Industrial Hygienist (CIH) or Asbestos Project Monitor (Ohio-licensed) shall review results daily and be on call for immediate response if action levels are approached or exceeded.

1.7.9.7 Compliant Materials

Provide the Government a list of and SDSs for all hazardous materials proposed for use on site. Materials must be compliant with all Clean Air Act regulations for emissions including solvent and volatile organic compound contents, and applicable National Emission Standards for Hazardous Air Pollutants requirements. The Government may alter or limit use of specific materials as needed to meet installation permit requirements for emissions.

1.8 LICENSES AND PERMITS

Obtain licenses and permits required for the construction of the project and in accordance with FAR 52.236-7 - Permits and Responsibilities. Notify the Government of all general use permitted equipment the Contractor plans to use on site. This paragraph supplements the Contractor's responsibility under FAR 52.236-7 - Permits and Responsibilities. Part 4 of this Section provides a list of typical preconstruction permits. The following paragraphs indicate which of those permits have been obtained by the Government or are in the process of being obtained by the Government.

a. The following permits have been obtained by the Government:

(1) None

b. The following permits will be obtained by the Government:

(1) None

The Contractor is responsible for the following (typical for this project):

- Ohio EPA Notification of Demolition and Renovation (Form EPA-50) for asbestos abatement activities – submit at least 10 working days prior to start of any asbestos-disturbing work.

- All waste shipment manifests (asbestos and universal waste).
Any required local air permits for negative air machines or generators (if applicable).

1.9 ENVIRONMENTAL RECORDS BINDER

Maintain on-site a separate three-ring Environmental Records Binder and submit at the completion of the project. Make separate parts within the binder that correspond to each submittal listed under paragraph CLOSEOUT SUBMITTALS in this section.

1.10 PESTICIDE DELIVERY, STORAGE, AND HANDLING

1.10.1 Delivery and Storage

Deliver pesticides to the site in the original, unopened containers bearing legible labels indicating the EPA registration number and the manufacturer's registered uses. Store pesticides according to manufacturer's instructions and under lock and key when unattended.

1.10.2 Handling Requirements

Formulate, treat with, and dispose of pesticides and associated containers in accordance with label directions and use the clothing and personal protective equipment specified on the labeling for use during each phases of the application. Furnish SDSs for pesticide products.

1.11 SOLID WASTE MANAGEMENT PERMIT

Provide the Contracting Officer with written notification of the quantity of anticipated solid waste or debris that is anticipated or estimated to be generated by construction. Include in the report the locations where various types of waste will be disposed or recycled. Include letters of acceptance from the receiving location or as applicable; submit one copy of the receiving location state and local Solid Waste Management Permit or license showing such agency's approval of the disposal plan before transporting wastes off Government property.

1.11.1 Solid Waste Management Report

Monthly, submit a solid waste disposal report to the Contracting Officer. For each waste, the report will state the classification (using the definitions provided in this section), amount, location, and name of the business receiving the solid waste.

1.12 BORROW SOILS

It is the responsibility of the Contractor to have any off site fill material certified that the fill material is suitable and meets environmental fill requirements, if applicable. The fill material shall be deemed suitable via sampling by an environmental engineering firm acceptable to the Contracting Officer's Representative (COR). This confirmation shall include obtaining and testing representative samples from the proposed borrow source. The engineering firm will submit certification of environmentally suitable material signed by a licensed professional engineer. This certification along with all proposed borrow sources, borrow materials, sampling and analysis plans and reports shall be deemed acceptable to the COR prior to transportation of borrow material to the site.

1.13 MANAGEMENT OF BORROW MATERIAL AND EXCESS SOIL

1. Under this contract, the intent is that all excavated soils are to be reused on-site to the greatest extent practicable and economically justified and the use of borrow from off-site sources shall be avoided to the greatest extent practicable and economically justified. (If available, the Government will identify on the contract drawings disposal areas and/or borrow areas outside the construction work limits on the Government installation where excess soils may be taken. Any compaction or grading requirements will be noted on the drawings or in the specifications.)

2. If reuse of all excavated soils is not practical or economical and disposal on the Government installation is not available, then all soil removed from the project site will be disposed of at a State permitted RCRA Subtitle D disposal facility in accordance with all applicable federal, state and local laws and regulations.

3. If reuse of all excavated soils is not practical or economical and disposal on the Government installation is not available, the Contractor may place excess excavated soil material on a receiving property that has been approved by the Government. The action of placing excess soil on the receiving property shall have had the appropriate level of National Environmental Policy Act (NEPA) compliance activity performed and deemed acceptable. If the NEPA assessment has not evaluated placement of spoils off-site, then compliance with NEPA will need to be demonstrated through

the preparation of a Record of Environmental Consideration (REC) or a Supplemental Environmental Assessment (EA). NEPA documents shall be prepared using an inter-disciplinary approach which will ensure the integrated use of the natural and social sciences and the environmental design arts (section 102(2)(A) of the Act). The disciplines of the preparers shall be appropriate to the scope and issues identified in the scoping process.

A written certification signed by the contractor shall be furnished to the Government indicating the soil was placed on the approved receiving site prior to payment for this effort. The certification shall identify dates and quantities of soils placed.

4. If borrow material is required and borrow is not available from the project site or the Government installation, the Contractor shall obtain borrow material from an off-site borrow source that has been approved by the Government. The action of acquiring borrow and transporting that material to the project shall have had the appropriate level of National Environmental Policy Act (NEPA) compliance activity performed and deemed acceptable. If the NEPA assessment has not evaluated the acquisition of borrow, then compliance with NEPA will need to be demonstrated through the preparation of a Record of Environmental Consideration (REC) or a Supplemental Environmental Assessment (EA). NEPA documents shall be prepared using an inter-disciplinary approach which will ensure the integrated use of the natural and social sciences and the environmental design arts (section 102(2)(A) of the Act). The disciplines of the preparers shall be appropriate to the scope and issues identified in the scoping process.

The Supplemental EA shall meet the requirements of ASTM E1527-05 and was performed no earlier than two months prior to award of the contract and by a qualified environmental professional as defined by X2.1 of ASTM E1527-05. The findings of the Supplemental EA shall state that no indications of contamination were found on or adjacent to the property and that no additional investigation is warranted. A copy of the ESA report shall be furnished by the Contractor to the Government.

1.14 SUBCONTRACTORS

Ensure compliance with this section by subcontractors.

1.15 PAYMENT

No separate payment will be made for work covered under this section. Payment of fees associated with environmental permits, application, and/or notices obtained by the Contractor, and payment of all fines/fees for violation or non-compliance with Federal, State, Regional and local laws and regulations are the Contractor's responsibility. All costs associated with this section must be included in the contract price.

PART 2 PRODUCTS

Not Used

PART 3 EXECUTION

3.1 PROTECTION OF NATURAL RESOURCES

Minimize interference with, disturbance to, and damage to fish, wildlife,

and plants, including their habitats. Prior to the commencement of activities, consult with the Installation Environmental Office, regarding rare species or sensitive habitats that need to be protected. The protection of rare, threatened, and endangered animal and plant species identified, including their habitats, is the Contractor's responsibility.

Preserve the natural resources within the project boundaries and outside the limits of permanent work. Restore to an equivalent or improved condition upon completion of work that is consistent with the requirements of the Installation Environmental Office or as otherwise specified. Confine construction activities to within the limits of the work indicated or specified.

3.1.1 Flow Ways

Do not alter water flows or otherwise significantly disturb the native habitat adjacent to the project and critical to the survival of fish and wildlife, except as specified and permitted.

3.1.2 Vegetation

Except in areas to be cleared, do not remove, cut, deface, injure, or destroy trees or shrubs without the Contracting Officer's permission. Do not fasten or attach ropes, cables, or guys to existing nearby trees for anchorages unless authorized by the Contracting Officer. Where such use of attached ropes, cables, or guys is authorized, the Contractor is responsible for any resultant damage.

Protect existing trees that are to remain to ensure they are not injured, bruised, defaced, or otherwise damaged by construction operations. Remove displaced rocks from uncleared areas. Coordinate with the Contracting Officer and Installation Environmental Office to determine appropriate action for trees and other landscape features scarred or damaged by equipment operations.

3.1.3 Streams

Stream crossings must allow movement of materials or equipment without violating water pollution control standards of the federal, state, and local governments. Construction of stream crossing structures must be in compliance with any required permits including, but not limited to, Clean Water Act Section 404, and Section 401 Water Quality.

The Contracting Officer's approval and appropriate permits are required before any equipment will be permitted to ford live streams. In areas where frequent crossings are required, install temporary culverts or bridges. Obtain Contracting Officer's approval prior to installation. Remove temporary culverts or bridges upon completion of work, and repair the area to its original condition unless otherwise required by the Contracting Officer.

3.2 STORMWATER

Do not discharge stormwater from construction sites to the sanitary sewer. If the water is noted or suspected of being contaminated, it may only be released to the storm drain system if the discharge is specifically permitted. Obtain authorization in advance from the Installation Environmental Office for any release of contaminated water.

3.2.1 Stormwater Pollution Prevention Plan (SWPPP)

In accordance with the National Pollutant Discharge Elimination System (NPDES) Permit, a Storm Water Pollution Prevention Plan (SWPPP) has been developed as part of this project. This plan has been developed to meet the erosion and sediment control requirements for the State of OH. The Contractor will implement the SWPPP that was prepared by the U.S. Army Corps of Engineers (COE) as shown on the plans, and as directed in these specifications. This SWPPP, which will be provided to the Contractor as part of these documents, must be implemented in accordance with the NPDES permit. A Notice of Intent (NOI) has been prepared by the COE and submitted to the State and all applicable Agencies. Prior to the notice to proceed being issued, or any construction activity (ground disturbing activity) to commence/ start by the Contractor, the compliance letter and NPDES permit must be issued by the State. The Contractor shall maintain a copy of the State compliance letter, the NPDES Permit and SWPPP at the construction site. Any changes made to the plan must be documented and approved by the Contracting Officer. Note, the SWPPP is a part of the total Pollution Prevention Plan that the Contractor is responsible for preparing.

Contractor shall submit to the State and/or applicable agencies a Notice of Termination (NOT) when the construction activities for the project have been completed, and when the contractor no longer has any storm water discharges associated with the construction activity, or when the contractor is no longer the operator of the facilities. Elimination of all storm water discharges associated with the construction activities occurs when disturbed soils at the construction site have been finally stabilized and temporary erosion and sediment control measures have been removed. Final stabilization means that all soil-disturbing activities at the site have been completed, and that, where applicable, a uniform perennial vegetative cover with a density of 70% of the cover for unpaved areas and areas not covered by permanent structures has been established, or equivalent permanent stabilization measures (such as the use of riprap, gabions, or geotextiles) have been employed. The 70% density of cover for unpaved areas shall be considered the minimum acceptable cover for the completed project area. Other States and/or applicable agencies may have a more restrictive percentage of cover required and if so, the Contractor shall be required to adhere to those requirements for release or acceptance of the permit(s) in those project locations. The NOT submittal and any subsequent approval or correspondences received from the State or applicable agencies shall be submitted by the Contractor to the Contracting Officer's Representative.

3.2.2 Construction General Permit Requirements

3.2.2.1 General

Under the terms and conditions of the permit, install, inspect, maintain BMPs, prepare stormwater erosion and sediment control inspection reports, and submit SWPPP inspection reports. Maintain construction operations and management in compliance with the terms and conditions of the general permit for stormwater discharges from construction activities.

3.2.2.2 Inspection Reports

Submit "Inspection Reports" to the Contracting Officer in accordance with the State of OHConstruction General Permit.

3.2.2.3 Stormwater Pollution Prevention Plan Compliance Notebook

Create and maintain a three ring binder of documents that demonstrate compliance with the Construction General Permit. Include a copy of the permit Notice of Intent, proof of permit fee payment, SWPPP and SWPPP update amendments, inspection reports and related corrective action records, copies of correspondence with the the OhioState Permitting Agency, and a copy of the permit Notice of Termination in the binder. At project completion, the notebook becomes property of the Government. Provide the compliance notebook to the Contracting Officer.

3.2.2.4 Stormwater Notice of Termination for Construction Activities

Submit a Notice of Termination to the Contracting Officer for approval once construction is complete and final stabilization has been achieved on all portions of the site for which the permittee is responsible. Once approved, submit the Notice of Termination to the appropriate state or federal agency.

3.2.3 Erosion and Sediment Control Measures

Provide erosion and sediment control measures in accordance with state and local laws and regulations. Preserve vegetation to the maximum extent practicable.

Erosion control inspection reports may be compiled as part of a stormwater pollution prevention plan inspection reports.

3.2.3.1 Erosion Control

Prevent erosion by mulching, Geotextiles, temporary slope drains,. Stabilize slopes by sodding, seeding, or such combination of these methods necessary for effective erosion control. Use of hay bales is prohibited.

Provide seeding in accordance with UFGS Section 32 92 19 SEEDING.

3.2.3.2 Sediment Control Practices

Implement sediment control practices to divert flows from exposed soils, temporarily store flows, or otherwise limit runoff and the discharge of pollutants from exposed areas of the site. Implement sediment control practices prior to soil disturbance and prior to creating areas with concentrated flow, during the construction process to minimize erosion and sediment laden runoff. Include the following devices: silt fence, temporary diversion dikes, storm drain inlet protection,

3.2.4 Work Area Limits

Mark the areas that need not be disturbed under this Contract prior to commencing construction activities. Mark or fence isolated areas within the general work area that are not to be disturbed. Protect monuments and markers before construction operations commence. Where construction operations are to be conducted during darkness, any markers must be visible in the dark. Personnel must be knowledgeable of the purpose for marking and protecting particular objects.

3.2.5 Contractor Facilities and Work Areas

Place field offices, staging areas, stockpile storage, and temporary buildings in areas designated on the drawings or as directed by the Contracting Officer. Move or relocate the Contractor facilities only when approved by the Government. Provide erosion and sediment controls for onsite borrow and spoil areas to prevent sediment from entering nearby waters. Control temporary excavation and embankments for plant or work areas to protect adjacent areas.

3.2.6 Municipal Separate Storm Sewer System (MS4) Management

Comply with the Installation's MS4 permit requirements.

3.3 SURFACE AND GROUNDWATER

3.3.1 Waters of the United States

Do not enter, disturb, destroy, or allow discharge of contaminants into waters of the United States

3.4 PROTECTION OF CULTURAL RESOURCES

3.4.1 Archaeological Resources

If, during excavation or other construction activities, any previously unidentified or unanticipated historical, archaeological, and cultural resources are discovered or found, activities that may damage or alter such resources will be suspended. Resources covered by this paragraph include, but are not limited to: any human skeletal remains or burials; artifacts; shell, midden, bone, charcoal, or other deposits; rock or coral alignments, pavings, wall, or other constructed features; and any indication of agricultural or other human activities. Upon such discovery or find, immediately notify the Contracting Officer so that the appropriate authorities may be notified and a determination made as to their significance and what, if any, special disposition of the finds should be made. Cease all activities that may result in impact to or the destruction of these resources. Secure the area and prevent employees or other persons from trespassing on, removing, or otherwise disturbing such resources. The Government retains ownership and control over archaeological resources.

3.5 AIR RESOURCES

Equipment operation, activities, or processes will be in accordance with 40 CFR 64 and state air emission and performance laws and standards.

3.5.1 Preconstruction Air Permits

Notify the Air Program Manager, through the Contracting Officer, at least 6 months prior to bringing equipment, assembled or unassembled, onto the Installation, so that air permits can be secured. Necessary permitting time must be considered in regard to construction activities. Clean Air Act (CAA) permits must be obtained prior to bringing equipment, assembled or unassembled, onto the Installation.

Confirm that these permits have been obtained.

3.5.2 Oil or Dual-fuel Boilers and Furnaces

Provide product data and details for new, replacement, or relocated fuel fired boilers, heaters, or furnaces to the Installation Environmental Office (Air Program Manager) through the Contracting Officer. Data to be reported include: equipment purpose (water heater, building heat, process), manufacturer, model number, serial number, fuel type (oil type, gas type) size (MMBTU heat input). Provide in accordance with paragraph PRECONSTRUCTION AIR PERMITS.

3.5.3 Burning

Burning is prohibited on the Government premises.

3.5.4 Class I and II ODS Prohibition

Class I and II ODS are Government property and must be returned to the Government for appropriate management. Coordinate with the Installation Environmental Office to determine the appropriate location for turn in of all reclaimed refrigerant.

3.5.5 Accidental Venting of Refrigerant

Accidental venting of a refrigerant is a release and must be reported immediately to the Contracting Officer.

3.5.6 EPA Certification Requirements

Heating and air conditioning technicians must be certified through an EPA-approved program. Maintain copies of certifications at the employees' places of business; technicians must carry certification wallet cards, as provided by environmental law.

3.5.7 Dust Control

Keep dust down at all times, including during nonworking periods. Sprinkle or treat, with dust suppressants, the soil at the site, haul roads, and other areas disturbed by operations. Dry power brooming will not be permitted. Instead, use vacuuming, wet mopping, wet sweeping, or wet power brooming. Air blowing will be permitted only for cleaning nonparticulate debris such as steel reinforcing bars. Only wet cutting will be permitted for cutting concrete blocks, concrete, and bituminous concrete. Do not unnecessarily shake bags of cement, concrete mortar, or plaster.

3.5.7.1 Particulates

Dust particles, aerosols and gaseous by-products from construction activities, and processing and preparation of materials (such as from asphaltic batch plants) must be controlled at all times, including weekends, holidays, and hours when work is not in progress. Maintain excavations, stockpiles, haul roads, permanent and temporary access roads, plant sites, spoil areas, borrow areas, and other work areas within or outside the project boundaries free from particulates that would exceed 40 CFR 50, state, and local air pollution standards or that would cause a hazard or a nuisance. Sprinkling, chemical treatment of an approved type, baghouse, scrubbers, electrostatic precipitators, or other methods will be permitted to control particulates in the work area. Sprinkling, to be efficient, must be repeated to keep the disturbed area damp. Provide

sufficient, competent equipment available to accomplish these tasks. Perform particulate control as the work proceeds and whenever a particulate nuisance or hazard occurs. Comply with state and local visibility regulations.

3.5.7.2 Abrasive Blasting

Blasting operations cannot be performed without prior approval of the Installation Air Program Manager. The use of silica sand is prohibited in sandblasting.

Provide tarpaulin drop cloths and windscreens to enclose abrasive blasting operations to confine and collect dust, abrasive agent, paint chips, and other debris. Perform work involving removal of hazardous material in accordance with 29 CFR 1910.

3.5.8 Odors

Control odors from construction activities. The odors must be in compliance with state regulations and local ordinances and may not constitute a health hazard.

3.6 WASTE MINIMIZATION

Minimize the use of hazardous materials and the generation of waste. Include procedures for pollution prevention/ hazardous waste minimization in the Hazardous Waste Management Section of the EPP. Obtain a copy of the installation's Pollution Prevention/Hazardous Waste Minimization Plan for reference material when preparing this part of the EPP. If no written plan exists, obtain information by contacting the Contracting Officer. Describe the anticipated types of the hazardous materials to be used in the construction when requesting information.

3.6.1 Salvage, Reuse and Recycle

Identify anticipated materials and waste for salvage, reuse, and recycling. Describe actions to promote material reuse, resale or recycling. To the extent practicable, all scrap metal must be sent for reuse or recycling and will not be disposed of in a landfill.

Include the name, physical address, and telephone number of the hauler, if transported by a franchised solid waste hauler. Include the destination and, unless exempted, provide a copy of the state or local permit (cover) or license for recycling.

3.6.2 NOT USED

3.7 WASTE MANAGEMENT AND DISPOSAL

3.7.1 Waste Determination Documentation

Complete a Waste Determination form (provided at the pre-construction conference) for Contractor-derived wastes to be generated. All potentially hazardous solid waste streams that are not subject to a specific exclusion or exemption from the hazardous waste regulations (e.g. scrap metal, domestic sewage) or subject to special rules, (lead-acid batteries and precious metals) must be characterized in accordance with

the requirements of 40 CFR 261 or corresponding applicable state or local regulations. Base waste determination on user knowledge of the processes and materials used, and analytical data when necessary. Consult with the Installation environmental staff for guidance on specific requirements. Attach support documentation to the Waste Determination form. As a minimum, provide a Waste Determination form for the following waste (this listing is not inclusive): oil- and latex -based painting and caulking products, solvents, adhesives, aerosols, petroleum products, and containers of the original materials.

3.7.2 Solid Waste Management

3.7.2.1 Solid Waste Management Report

Provide copies of the waste handling facilities' weight tickets, receipts, bills of sale, and other sales documentation. In lieu of sales documentation, a statement indicating the disposal location for the solid waste that is signed by an employee authorized to legally obligate or bind the firm may be submitted. The sales documentation Contractor certification must include the receiver's tax identification number and business, EPA or state registration number, along with the receiver's delivery and business addresses and telephone numbers. For each solid waste retained for the Contractor's own use, submit the information previously described in this paragraph on the solid waste disposal report. Prices paid or received do not have to be reported to the Contracting Officer unless required by other provisions or specifications of this Contract or public law.

3.7.2.2 Control and Management of Solid Wastes

Pick up solid wastes, and place in covered containers that are regularly emptied. Do not prepare or cook food on the project site. Prevent contamination of the site or other areas when handling and disposing of wastes. At project completion, leave the areas clean. Employ segregation measures so that no hazardous or toxic waste will become co-mingled with non-hazardous solid waste. Transport solid waste off Government property and dispose of it in compliance with 40 CFR 260, state, and local requirements for solid waste disposal. A Subtitle D RCRA permitted landfill is the minimum acceptable offsite solid waste disposal option. Verify that the selected transporters and disposal facilities have the necessary permits and licenses to operate. Comply with site procedures. Segregate and separate treated wood components disposed at a lined landfill approved to accept this waste in accordance with local and state regulations Solid waste disposal offsite must comply with most stringent local, state, and federal requirements, including 40 CFR 241, 40 CFR 243, and 40 CFR 258.

Manage hazardous material used in construction, including but not limited to, aerosol cans, waste paint, cleaning solvents, contaminated brushes, and used rags, in accordance with 49 CFR 173.

3.7.3 Chemicals and Chemical Wastes

Dispense chemicals ensuring no spillage to the ground or water. Perform and document periodic inspections of dispensing areas to identify leakage and initiate corrective action. This documentation will be periodically reviewed by the Government. Collect chemical waste in corrosion resistant, compatible containers. Collection drums must be monitored and removed to a staging or storage area when contents are within 150 mm(6

inches) of the top. Wastes will be classified, managed, stored, and disposed of in accordance with Federal, State, and local laws and regulations.

3.7.4 Control and Management of Hazardous Waste

Do not dispose of hazardous waste on Government property. Do not discharge any waste to a sanitary sewer, storm drain, or to surface waters or conduct waste treatment or disposal on Government property without written approval of the Contracting Officer.

3.7.4.1 Hazardous Waste/Debris Management

Identify construction activities that will generate hazardous waste or debris. Provide a documented waste determination for resultant waste streams. Identify, label, handle, store, and dispose of hazardous waste or debris in accordance with federal, state, and local regulations, including 40 CFR 261, 40 CFR 262, 40 CFR 263, 40 CFR 264, 40 CFR 265, 40 CFR 266, and 40 CFR 268.

Manage hazardous waste in accordance with the approved Hazardous Waste Management Section of the EPP. Store hazardous wastes in approved containers in accordance with 49 CFR 173 and 49 CFR 178. Hazardous waste generated within the confines of Government facilities is identified as being generated by the Government. Prior to removal of any hazardous waste from Government property, hazardous waste manifests must be signed by personnel from the Installation Environmental Office. Do not bring hazardous waste onto Government property. Provide the Contracting Officer with a copy of waste determination documentation for any solid waste streams that have any potential to be hazardous waste or contain any chemical constituents listed in 40 CFR 372-SUBPART D.

3.7.4.2 NOT USED

3.7.4.3 Hazardous Waste Disposal

3.7.4.3.1 Responsibilities for Contractor's Disposal

Provide hazardous waste manifest to the Installations Environmental Office for review, approval, and signature prior to shipping waste off Government property.

3.7.4.3.1.1 Services

Provide service necessary for the final treatment or disposal of the hazardous material or waste in accordance with 40 CFR 260, local, and state, laws and regulations, and the terms and conditions of the Contract within sixty (60) days after the materials have been generated. These services include necessary personnel, labor, transportation, packaging, detailed analysis (if required for disposal or transportation, include manifesting or complete waste profile sheets, equipment, and compile documentation).

3.7.4.3.1.2 Samples

Obtain a representative sample of the material generated for each job done to provide waste stream determination.

3.7.4.3.1.3 Analysis

Analyze each sample taken and provide analytical results to the Contracting Officer. See paragraph WASTE DETERMINATION DOCUMENTATION.

3.7.4.3.1.4 Labeling

Determine the Department of Transportation's (DOT's) proper shipping names for waste (each container requiring disposal) and demonstrate to the Contracting Officer how this determination is developed and supported by the sampling and analysis requirements contained herein. Label all containers of hazardous waste with the words "Hazardous Waste" or other words to describe the contents of the container in accordance with 40 CFR 262.31 and applicable state or local regulations.

3.7.4.3.2 Contractor Disposal Turn-In Requirements

Hazardous waste generated must be disposed of in accordance with the following conditions to meet installation requirements:

a. Drums must be compatible with waste contents and drums must meet DOT requirements for 49 CFR 173 for transportation of materials.

b. Band drums to wooden pallets.

c. No more than three 55 gallon drums or two 85 gallon over packs are to be banded to a pallet.

d. Band using 1-1/4 inch minimum band on upper third of drum.

e. Provide label in accordance with 49 CFR 172.101.

f. Leave 3 to 5 inches of empty space above volume of material.

3.7.4.4 Universal Waste Management

Manage the following categories of universal waste in accordance with federal, state, and local requirements and installation instructions:

a. Batteries as described in 40 CFR 273.2

b. Lamps as described in 40 CFR 273.5

c. Mercury-containing equipment as described in 40 CFR 273.4

Mercury is prohibited in the construction of this facility, unless specified otherwise, and with the exception of mercury vapor lamps and fluorescent lamps. Dumping of mercury-containing materials and devices such as mercury vapor lamps, fluorescent lamps, and mercury switches, in rubbish containers is prohibited. Remove without breaking, pack to prevent breakage, and transport out of the activity in an unbroken condition for disposal as directed.

3.7.4.5 Electronics End-of-Life Management

Recycle or dispose of electronics waste, including, but not limited to, used electronic devices such computers, monitors, hard-copy devices, televisions, mobile devices, in accordance with 40 CFR 260-262, state, and local requirements, and installation instructions.

3.7.4.6 Disposal Documentation for Hazardous and Regulated Waste

Contact the Contracting Officer for the facility RCRA identification number that is to be used on each manifest.

3.7.5 Releases/Spills of Oil and Hazardous Substances

3.7.5.1 Response and Notifications

Exercise due diligence to prevent, contain, and respond to spills of hazardous material, hazardous substances, hazardous waste, sewage, regulated gas, petroleum, lubrication oil, and other substances regulated in accordance with 40 CFR 300. Maintain spill cleanup equipment and materials at the work site. In the event of a spill, take prompt, effective action to stop, contain, curtail, or otherwise limit the amount, duration, and severity of the spill/release. In the event of any releases of oil and hazardous substances, chemicals, or gases; immediately (within 15 minutes) notify the Installation Fire Department, the Installation Command Duty Officer, the Installation Environmental Office, the Contracting Officer.

Submit verbal and written notifications as required by the federal (40 CFR 300.125 and 40 CFR 355), state, local regulations and instructions. Provide copies of the written notification and documentation that a verbal notification was made within tewnty (20) days. Spill response must be in accordance with 40 CFR 300 and applicable state and local regulations. Contain and clean up these spills without cost to the Government.

3.7.5.2 Clean Up

Clean up hazardous and non-hazardous waste spills. Reimburse the Government for costs incurred including sample analysis materials, clothing, equipment, and labor if the Government will initiate its own spill cleanup procedures, for Contractor- responsible spills, when: Spill cleanup procedures have not begun within one hour of spill discovery/occurrence; or, in the Government's judgment, spill cleanup is inadequate and the spill remains a threat to human health or the environment.

3.7.6 Mercury Materials

Immediately report to the Environmental Office and the Contracting Officer instances of breakage or mercury spillage. Clean mercury spill area to the satisfaction of the Contracting Officer.

Do not recycle a mercury spill cleanup; manage it as a hazardous waste for disposal.

3.7.7 Wastewater

3.7.7.1 Disposal of wastewater must be as specified below.

3.7.7.1.1 Surface Discharge

For discharge of ground water,

3.8 HAZARDOUS MATERIAL MANAGEMENT

Include hazardous material control procedures in the Safety Plan, in accordance with LRL Section 01 35 26.00 06 GOVERNMENTAL SAFETY REQUIREMENTS. Address procedures and proper handling of hazardous materials, including the appropriate transportation requirements. Do not bring hazardous material onto Government property that does not directly relate to requirements for the performance of this contract. Submit an SDS and estimated quantities to be used for each hazardous material to the Contracting Officer prior to bringing the material on the installation. Typical materials requiring SDS and quantity reporting include, but are not limited to, oil and latex based painting and caulking products, solvents, adhesives, aerosol, and petroleum products. Use hazardous materials in a manner that minimizes the amount of hazardous waste generated. Containers of hazardous materials must have National Fire Protection Association labels or their equivalent. Certify that hazardous materials removed from the site are hazardous materials and do not meet the definition of hazardous waste, in accordance with 40 CFR 261.

3.9 PREVIOUSLY USED EQUIPMENT

Clean previously used construction equipment prior to bringing it onto the project site. Equipment must be free from soil residuals, egg deposits from plant pests, noxious weeds, and plant seeds. Consult with the U.S. Department of Agriculture jurisdictional office for additional cleaning requirements.

3.10 CONTROL AND MANAGEMENT OF ASBESTOS-CONTAINING MATERIAL (ACM)

Manage and dispose of asbestos containing waste in accordance with 40 CFR 61and UFGS Section 08 82 00 ASBESTOS REMEDIATION. Manifest asbestos containing waste and provide the manifest to the Contracting Officer. Notifications to the state and Installation Air Program Manager are required before starting any asbestos work.

3.11 CONTROL AND MANAGEMENT OF LEAD-BASED PAINT (LBP)

Manage and dispose of lead-contaminated waste in accordance with 40 CFR 745 and UFGS Section 02 83 00 LEAD REMEDIATION. Manifest any lead-contaminated waste and provide the manifest to the Contracting Officer. For the purposes of this contract, all painted surfaces are assumed to contain lead and as such must be handled in accordance with 29 CFR 1926.62.

3.12 CONTROL AND MANAGEMENT OF LIGHTING BALLAST AND LAMPS CONTAINING PCBS

Manage and dispose of contaminated waste in accordance with 40 CFR 761. Refer to UFGS Section 02 84 16 HANDLING OF LIGHTING BALLASTS AND LAMPS CONTAINING PCBS AND MERCURY.

3.13 PETROLEUM, OIL, LUBRICANT (POL) STORAGE AND FUELING

POL products include flammable or combustible liquids, such as gasoline, diesel, lubricating oil, used engine oil, hydraulic oil, mineral oil, and cooking oil. Store POL products and fuel equipment and motor vehicles in a manner that affords the maximum protection against spills into the environment. Manage and store POL products in accordance with EPA 40 CFR 112, and other federal, state, regional, and local laws and regulations. Use secondary containments, dikes, curbs, and other barriers, to prevent POL products from spilling and entering the ground, storm or sewer drains, stormwater ditches or canals, or navigable waters of the United States. Describe in the EPP (see paragraph ENVIRONMENTAL PROTECTION PLAN) how POL tanks and containers must be stored, managed, and inspected and what protections must be provided. Storage of oil, including fuel, on the project site is not allowed. Fuel must be brought to the project site each day that work is performed. Storage of fuel on the project site must be in accordance with EPA, state, and local laws and regulations and paragraph OIL STORAGE INCLUDING FUEL TANKS.

3.13.1 Used Oil Management

Manage used oil generated on site in accordance with 40 CFR 279. Determine if any used oil generated while onsite exhibits a characteristic of hazardous waste. Used oil containing 1,000 parts per million of solvents is considered a hazardous waste and disposed of at the Contractor's expense. Used oil mixed with a hazardous waste is also considered a hazardous waste. Dispose in accordance with paragraph HAZARDOUS WASTE DISPOSAL.

3.13.2 Oil Storage Including Fuel Tanks

Provide secondary containment and overfill protection for oil storage tanks. A berm used to provide secondary containment must be of sufficient size and strength to contain the contents of the tanks plus 5 inches freeboard for precipitation. Construct the berm to be impervious to oil for 72 hours that no discharge will permeate, drain, infiltrate, or otherwise escape before cleanup occurs. Use drip pans during oil transfer operations; adequate absorbent material must be onsite to clean up any spills and prevent releases to the environment. Cover tanks and drip pans during inclement weather. Provide procedures and equipment to prevent overfilling of tanks. If tanks and containers with an aggregate aboveground capacity greater than 1320 gallons will be used onsite (only containers with a capacity of 55 gallons or greater are counted), provide and implement a SPCC plan meeting the requirements of 40 CFR 112. Do not bring underground storage tanks to the installation for Contractor use during a project. Submit the SPCC plan to the Contracting Officer for approval.

Monitor and remove any rainwater that accumulates in open containment dikes or berms. Inspect the accumulated rainwater prior to draining from a containment dike to the environment, to determine there is no oil sheen present.

3.14 INADVERTENT DISCOVERY OF PETROLEUM-CONTAMINATED SOIL OR HAZARDOUS WASTES

If petroleum-contaminated soil, or suspected hazardous waste is found during construction that was not identified in the Contract documents, immediately notify the Contracting Officer. Do not disturb this material

until authorized by the Contracting Officer.

3.15 PEST MANAGEMENT

In order to minimize impacts to existing fauna and flora, coordinate with the Installation Pest Management Coordinator (IPMC) or Project Pesticide Coordinator (PPC), through the Contracting Officer, at the earliest possible time prior to pesticide application. Discuss integrated pest management strategies with the IPMC and receive concurrence from the IPMC through the Contracting Officer prior to the application of any pesticide associated with these specifications. Provide Installation Project Office Pest Management personnel the opportunity to be present at meetings concerning treatment measures for pest or disease control and during application of the pesticide. For termiticide requirements, see UFGS Section 31 31 16.13 CHEMICAL TERMITE CONTROL The use and management of pesticides are regulated under 40 CFR 152 - 186. The Contractor shall submit, in writing, to the Contracting Officer, a Notice of Soil Treatment, seven (7) days before the required soil treatment agents are applied, to assure that DOD Certified Pest Control Personnel are present during soil treatment applications. All soil treatment applications must be in the presence of DOD Certified Pest Control personnel.

3.15.1 Pesticide Delivery and Storage

Deliver pesticides to the site in the original, unopened containers bearing legible labels indicating the EPA registration number and the manufacturer's registered uses. Store pesticides according to manufacturer's instructions and under lock and key when unattended.

3.15.2 Pesticide Handling Requirements

Formulate, treat with, and dispose of pesticides and associated containers in accordance with label directions and use the clothing and personal protective equipment specified on the labeling for use during all phases of the application. Furnish Material Safety Data Sheets (MSDS) for all pesticide products.

3.15.3 Qualifications

For the application of pesticides, use the services of a subcontractor whose principal business is pest control. The subcontractor must be licensed and certified in the state where the work is to be performed.

3.15.4 Application

Apply pesticides using a state-certified pesticide applicator in accordance with EPA label restrictions and recommendation. The certified applicator must wear clothing and personal protective equipment as specified on the pesticide label. The Contracting Officer will designate locations for water used in formulating. Do not allow the equipment to overflow. Inspect equipment for leaks, clogging, wear, or damage and repair prior to application of pesticide.

3.15.5 Pesticide Treatment Plan

Include and update a pesticide treatment plan, as information becomes available. Include in the plan the sequence of treatment, dates, times, locations, pesticide trade name, EPA registration numbers, authorized uses, chemical composition, formulation, original and applied

concentration, application rates of active ingredient (that is, pounds of active ingredient applied), equipment used for application and calibration of equipment. Comply with 40 CFR 152-189, state, regional, and local pest management record-keeping and reporting requirements as well as any additional Installation Project Office specific requirements in conformance with DA AR 200-1 Chapter 5, Pest Management, Section 5-4 "Program requirements" for data required to be reported to the Installation.

3.16 CHLORDANE

Evaluate excess soils and concrete foundation debris generated during the demolition of housing units or other wooden structures for the presence of chlordane or other pesticides prior to reuse or final disposal.

3.17 POST CONSTRUCTION CLEANUP

Clean up areas used for construction in accordance with FAR 52.236-12 - Cleaning Up. Unless otherwise instructed in writing by the Contracting Officer, remove traces of temporary construction facilities such as haul roads, work area, structures, foundations of temporary structures, stockpiles of excess or waste materials, and other vestiges of construction prior to final acceptance of the work. Grade parking area and similar temporarily used areas to conform with surrounding contours.

PART 4 ENVIRONMENTAL PERMITS AND COMMITMENTS

4.1 LIST OF PRECONSTRUCTION PERMITS

Obtaining and complying with all environmental permits and commitments required by Federal, State, regional, local, and Installation/Facility environmental laws and regulations are the Contractor's responsibility. Prior to beginning of construction, the Contractor shall, upon review of the project and this specification section, make a list of all permits and construction-related commitments/and requirements required for the duration of the construction phase to be attached to the Environmental Protection Plan, or other similar documentation if an Environmental Protection Plan is not required. The Contractor, in conjunction with the Designer of Record (DOR), shall prepare a List of Preconstruction Permits (LOPP) with construction-related commitments/and requirements. The LOPP shall include, but is not be limited to the following: permit name, the address of the permitting agency, cost of submittal/Permit fee, and the name of the permitee. The LOPP should also include specifics of each permit such as the purpose/reason permit is needed, regulatory requirements, applicability to the project, schedule for obtaining permit, and other information such as authorized or permit restrictions. The LOPP should also list specific commitments (i.e., dust control measures, tree cutting restrictions, erosion control measures) that are not inherent to a specific permit or may apply to multiple permits, or are required for proper construction and compliance.

4.2 ENVIRONMENTAL REGULATIONS AND OTHER DOCUMENTS THAT MAY CONTAIN INFORMATION TO IDENTIFY PRECONSTRUCTION PERMITS AND CONSTRUCTION-RELATED COMMITMENTS

4.2.1 National Environmental Policy Act (NEPA)

The National Environmental Policy Act establishes policies and goals for the protection of the environment. The NEPA process includes systematic

examination of possible and probable environmental consequences of implementing a Proposed Action. USACE projects should be in compliance with AR 200-2, Chapter 2 - National Environmental Policy Act and the Decision Process. ER 200-2-2 provides additional guidance on NEPA documentation. It is the responsibility of the Contractor to obtain and review copies of NEPA documentation related to the project prior to beginning of construction. This may include but is not limited to the Record of Environmental Consideration (REC), an Environmental Assessment (EA), a Finding of No Significant Impact (FONSI), an Environmental Impact Statement (EIS), a Life Cycle Environmental Document (LCED), a Record of Decision (ROD), and a Categorical Exclusion (CX). These documents may also contain commitments, such Environmental Impacts and Minimization/Avoidance Measures for the Proposed Action that must be followed and incorporated into the Environmental Protection Plan or other appropriate documentation, and included in the LOPP.

4.2.2 Endangered Species Act

Construction should be completed in compliance with the Endangered Species act of 1973 and Army Regulation AR 200-3, Chapter 11 - Endangered/Threatened Species Guidance. The Endangered Species Act provides a program for the conservation of threatened and endangered plants and animals and the habitats in which they reside. In the case that a proposed construction action could be harmful to a threatened or endangered species or its habitat, the Contractor will be required to review and follow federal, state, regional, and local regulations pertaining to threatened and endangered species. For work taking place on a military installation, the Contractor will be required to obtain and review a copy of any Endangered Species Management Plans (ESMP) or other related commitments from the appropriate base personnel, or State Fish and Wildlife personnel relative to the Installation.

Projects that may affect threatened or endangered species will likely have had a Biological Evaluation and may also have a Biological Assessment completed for the action. The Biological Evaluation and Biological Assessment provides site-specific information regarding potential impacts to federally threatened or endangered species in compliance with Section 7 (a)(2) of the Endangered Species Act. If a Biological Evaluation or a Biological Assessment has been completed for the proposed action, the Contractor should obtain and review it and use it to help develop species specific protection measures to be included in the Environmental Protection Plan.

If a threatened or endangered species is encountered during construction, the Contractor should immediately stop construction in the area and contact the appropriate authorities. Even if endangered species are not located at a construction site, the facility ESMP may have avoidance measures required of any construction at the facility. The Contractor should thoroughly review and follow requirements of the ESMP.

4.2.3 National Historic Preservation Act

The National Historic Preservation Act is intended to protect the nations historic and cultural resources. Section 106 of the National Historic Preservation Act requires any government agency with jurisdiction over an undertaking to take into account its effects on any district, site, building, structure, or object included on or eligible for inclusion on the National Register. Construction should be completed in compliance with the National Historic Preservation Act. It is the responsibility of

the Contractor to obtain and review a copy of any pertinent Integrated Cultural Resources Management Plan from the appropriate authorities. If at any time during construction cultural resources are discovered, the Contractor will immediately stop any construction that may damage the newly discovered resource. It is the responsibility of the Contractor to review any additional State, regional, or local regulations and obtain necessary permits.

4.2.4 Clean Water Act

The Clean Water Act is the primary federal law of the United States governing water pollution. The purpose of the Clean Water Act is to eliminate release of high amounts of pollution into waters of the United States.

4.2.4.1 National Pollutant Discharge Elimination System (NPDES)
Section 402 of the Clean Water Act authorizes the National Pollutant Discharge Elimination System (NPDES) permit program. Compliance with NPDES will be required on any construction project with at least one acre of land disturbance. The Government has already acquired the NPDES permit for this construction activity. It is the responsibility of the Contractor to determine if a general permit has been issued covering construction activities. Additionally, the Contractor is to follow the NPDES and Notice of Intent (NOI) requirements throughout the construction duration. In compliance with NPDES, a Storm Water Pollution Prevention Plan (SWPPP) or a Soil Erosion and Sediment Control Plan must be in place and followed for the duration of construction. The project specific SWPPP is attached at this section. A Storm Water Best Management Practices (SWBMP) Plan should also be included as part of the Environmental Protection Plan. After construction is finished, a Notice of Termination must be submitted within thirty (30) days after all land disturbing activity is complete.

4.2.4.2 Section 404 Permit for Dredge/Fill Operations

Construction resulting in the discharge of fill or dredge material into wetlands or waters of the United States must be authorized by a permit pursuant to section 404 of the Clean Water Act. It is the responsibility of the Contractor to obtain and review the Federal, State, or Regional general permits pertaining to construction, or to obtain an individual permit if construction activity is not covered by a general permit.

4.2.4.3 Waste Water Discharge Permits

NPDES authorizes permitting requirements for waste water discharge. Any non-exempt facilities that will discharge waste water to the local sanitary sewer system (ex. on-site concrete plant, on-site sewage treatment plant, water treatment plant, equipment wash rack) will require permits in accordance with any Federal, State, regional, and local regulations.

4.2.4.4 Aquatic Resources Alteration Permit (NOT APPLICABLE - Tennessee Permit)

State, Regional, or Local regulations may also require an Aquatic Resources Alteration Permit for any construction that alters a stream, lake, river, or wetland. It is the responsibility of the Contractor to review the regulations of jurisdictions covering the construction site and to obtain any necessary permits in compliance with these jurisdictions.

4.2.5 Resource Conservation and Recovery Act

The Resource Conservation and Recovery Act (RCRA) is the principal Federal law of the United States covering the disposal of solid and hazardous waste. The RCRA also provides regulation on underground storage tanks (USTs). The objectives of the RCRA are to protect human health and the environment from potential hazards of waste disposal, to conserve energy and natural resources, to reduce waste generation, and to ensure wastes are managed in an environmentally sound way. Construction should be completed in compliance with RCRA Part C (hazardous waste) and RCRA Part D non-hazardous solid wastes).

4.2.5.1 Solid Waste Disposal

The Contractor is responsible for including a Solid Waste Minimization Plan and a Contaminant Prevention Plan as part of the Environmental Protection Plan. These plans are to ensure the proper handling of solid waste generated during construction. In general, the Contractor is required to divert a minimum of 60 percent of solid waste generated during construction from landfills, but this amount may vary between Installations. Refer to the UFGS SECTION 01 74 19 CONSTRUCTION AND DEMOLITION WASTE MANAGEMENT for more information regarding solid waste disposal and requirements. It is the responsibility of the Contractor to obtain a Solid Waste Permit or a Beneficial Reuse Permit from the State and local authorities.

4.2.5.2 Hazardous Waste Disposal

Hazardous wastes are as defined in 40 CFR 261. The Contractor is responsible for developing a Spill Control Plan to be included in the Environmental Protection Plan. The Contractor may be required to obtain a Hazardous Waste Generator ID# from the EPA, and additional permitting requirements may have to be met in accordance with State, regional, and local regulations. If during construction any asbestos, lead based paint, Polychlorinated biphenyl, or any other material or substance hazardous to human health is encountered, that portion of work should be stopped immediately, the contracting officer should be contacted, and all necessary precautions to avoid human harm should be taken.

4.2.5.2.1 Asbestos Containing Materials

The contractor will need to perform a thorough survey of the area undergoing renovation in accordance with NESHAPs regulation prior to any renovation/demolition activities. All asbestos containing materials removal, handling, transport and disposal will be handled as part of the contract. All activities involving asbestos will need to be performed in accordance the Construction Industry standard 29 CFR 1926.1101 and all applicable Federal, State and local regulations.

4.2.5.2.2 Lead Based Paint

All painted surfaces are assumed to contain lead and must be handled in accordance with the OSHA Lead in Construction Standard 29 CFR 1926.62 and LRL Section 02 83 13.00 06 Lead in Construction.

4.2.5.3 Underground Storage Tank Systems

An underground storage tank (UST) system is a tank and any underground

piping that has at least 10 percent of its total volume underground. Any construction dealing with the installation, modification, or removal of an UST must be in compliance with the RCRA, and AR 200-1, Chapter 11 - Storage Tank Systems/Oil and Hazardous Substances Spills, and the UFGS SECTION 02 65 00 UNDERGROUND STORAGE TANK REMOVAL. Additional State, regional, and local permitting may be required for construction dealing with USTS. It is the responsibility of the Contractor to obtain any of these permits. If a UST is encountered that was not included in the design, work around the vicinity of the tank and potential contaminated areas will stop and the contractor will notify the contracting officer.

4.2.6 Safe Drinking Water Act (SDWA)

The purpose of the Safe Drinking Water Act (SDWA) is to protect public drinking water and its sources: rivers, lakes, reservoirs, springs, and ground water wells. Construction should be completed in compliance with requirements of the Safe Drinking Water Act, as stated by Army Regulation AR 200-1, Chapter 4 - Environmental Asset Management.

4.2.6.1 Water Distribution

Any construction involving the installation of a water treatment system, installation of water distribution lines, or the installation of a drinking water well will require permitting, usually issued by the State government and as coordinated with local and State regulatory authorities.

4.2.6.2 Groundwater Protection

The Contractor will be required to develop and adhere to a groundwater protection plan for any construction that could result in groundwater contamination. The groundwater protection plan should be included as part of the Environmental Protection Plan. The Contractor should review Federal, State, regional, and local regulations concerning groundwater protection and obtain permits required by regulations. If the Contractor is required to use underground injection to dispose of fluids in the ground, and underground injection control permit will be required, which will likely be issued by the State. The Contractor should coordinate with State authorities to insure that proper permitting is obtained and applicable regulations are followed.

4.2.7 Occupational Safety and Health Act

The Occupational Safety and Health Act is the primary federal law governing occupational health and safety in the workplace. Its main goal is to ensure that employers provide employees with an environment free from recognized hazards, such as exposure to toxic chemicals, excessive noise levels, mechanical dangers, heat or cold stress, or unsanitary conditions.
Many states have their own Occupational Safety and Health requirements which are at least as strict as the Federal requirements. The Contractor should adhere to 29 CFR 1926 which regulates construction activities as well as follow safety and health requirements specified in EM 385-1-1.

4.2.7.1 Employee Right to Know

Employee Right to Know is an Occupational Safety and Health Administration (OSHA) regulation giving employees the right to know information about the hazards they may be exposed to in the workplace, or on a construction site. The Contractor should be in compliance with OSHA standards during

the duration of construction. The Contractor should make available material safety data sheets (MSDS) on any hazardous material or product that may be present on the construction site. These sheets should include such information such as the specific product, hazards and safety risks related to the product, storage and disposal requirements, protective equipment requirements, and emergency response procedures.

4.2.7.2 Occupational Exposure Limits (OELs)

The United States Army Corps of Engineers (USACE) uses enforceable occupational exposure limits (OELs) to protect employees against potential health effects of exposure to hazardous substances. The OELs are regulatory limits on the amount (concentration) of a substance in the air, or on the skin. It is the responsibility of the Contractor to ensure that the construction site remains within the OELs set by USACE. EM 385-1-1 defines the OELs as the most stringent standard published between the most recently published American Conference of Governmental Industrial Hygienists (ACGIH) guideline "Threshold Limit Values and Biological Exposure Indices," and the Occupational Safety and Health Administration (OSHA) Permissible Exposure Limits (PELs) as defined by 29 CFR 1910, 29 CFR 1915, and 29 CFR 1926.

4.2.7.3 Confined Spaces

A confined space has limited or restricted means for entry or exit, and is not designed for continuous employee occupancy. This includes areas such as underground vaults, tanks, storage bins, manholes, pits, silos, process vessels, and pipelines. A confined space may require a special permit for work to take place. A permit-required confined space as described by OSHA is a confined space with any of the following characteristics: contains or has the potential to contain a hazardous atmosphere; contains a material that has the potential to engulf an entrant; has walls that converge inward or floors that slope downward and taper into a smaller area which could trap or asphyxiate an entrant; or contains any other recognized safety or health hazard, such as unguarded machinery, exposed live wires, or heat stressors. The Contractor should follow Federal, State, regional and local regulations and obtain necessary permits in regards to work in confined spaces.

4.2.8 Coastal Zone Management Act

The Coastal Zone Management Act of 1972 establishes a voluntary national program to encourage coastal states to implement coastal zone management plans. The Contractor should be aware that the mentioned coastal zone management plans may exist in any coastal state, including the Great Lakes. It is the responsibility of the Contractor to obtain the coastal zone management plan from the State government where the project is located, and to follow all regulations set forth by the plan.

4.2.9 Burning Permits

If the burning is allowed by the federal government on the construction site, it is the responsibility of the Contractor to coordinate with state, regional, and local governments to obtain necessary permitting before proceeding with any burning activity. State, Regional, or Local requirements may call for the development of a burn plan before any burning can be done on the construction site. It will be the responsibility of the Contractor to develop and submit for approval a burn plan for the construction site before any burning takes place.

4.2.10 Floodplain Construction Permits (applicable to both 401 and 404 permits)

In accordance with CFR 44, Part 60.3 - Flood Plain Management Criteria for Flood-prone Areas, communities are required to issue permits for proposed construction and development activities within the community. This is to ensure the proper management of flood prone areas. It is the responsibility of the Contractor to obtain necessary Federal, State, regional, and local permits related to floodplain construction and to follow all related regulations.

4.2.11 Air Quality Permits

The Contractor is responsible for developing a dirt and dust control plan prior to construction. It is the responsibility of the Contractor to obtain any State, Regional, and Local permits relating to air quality during construction. A permit may be required if there is any issue with emissions release during construction, detectable levels of radon, or dirt and dust control issues. Also, the Contractor may be required to obtain a permit for the use of any equipment with combustible sources. Appropriate radon mitigation measures should be used during construction in accordance with 29 CFR 1910.

4.2.12 Excavation Permit

In addition to the Notice of Intent (NOI), an excavation permit from State, regional, local governments, and/or the facility/Installation may be required before excavation can commence on the project site. It is the responsibility of the Contractor to review State, regional, and local regulations pertaining to excavation and to obtain any necessary permits prior to initiation of construction.

4.2.13 Vegetation and Revegetation Permit

Any construction activity that involves vegetation removal or re-vegetation may require a vegetation permit from State, regional, and local authorities. It is the responsibility to review State, regional, and local regulations pertaining to vegetation prior to construction and to follow through with responsibilities stated in the regulations. Vegetation removal or vegetation plans may be restricted or limited by the presence of threatened or endangered species or by a pest management requirements. If the project could affect threatened and endangered species or is covered by a pest management plan, the Contractor may have special vegetation requirements to follow. These requirements would be included in the appropriate facility management plans or by Fish and Wildlife Service regulations.

4.2.14 Water Withdrawal Permits

Withdrawal of water from any surface, spring, or groundwater source may require a Water Withdrawal Permit. It is the responsibility of the Contractor to review any relevant State, regional, and local regulations and to obtain any necessary permits for water withdrawal activities prior to initiation of construction.

4.2.15 Zoning Permits

It is the responsibility of the Contractor to review any State, regional,

and local regulations pertaining to zoning and to obtain necessary permits prior to initiation of construction.

4.2.16 Noise Permits

Some local and state jurisdictions may enforce noise ordinances. Construction activity may be in violation of these ordinances and could require permit to exceed the ordinance levels. It is the responsibility of the Contractor to review local regulations regarding noise pollution and to obtain necessary permits prior to the initiation of construction.

4.2.17 Pesticide Permits

Some construction projects may require the use of pesticides for pest control. If a pesticide is to be used on a construction site, the Contractor is responsible for following procedures in the area Integrated Pest management plan (IMPM). Pest control measures must be in compliance with AR200-1, Chapter 5 - Pest Management. Obtainment of Federal, State, regional, or local permits required for the use of a pesticide is the responsibility of the Contractor.

4.2.18 Munitions and Explosives of Concern (MEC)/Unexploded Ordnance (UXO)

In the event military munitions, as defined in 40 CFR 260, are discovered or uncovered, the Contractor will immediately stop work in that area and immediately inform the Contracting Officer. Any construction on a site that has the possibility of the existence of MEC or UXO must be coordinated through the Center of Expertise.

4.2.19 Driveway / Curb Cut Permit

The construction of a driveway connecting to a public road may require permitting. The contractor should review all State, regional, and local regulations pertaining to driveway construction and curb cutting and obtain any necessary permits. In addition to driveway and curb cut Permits, a right-of-way Permit to be obtained by the Contractor may also be required if a sidewalk will be temporarily obstructed during the construction of a driveway entrance.

4.2.20 Demolition/Renovation Permit

Construction projects that require the demolition or renovation of structures may require the Contractor to obtain permitting. The National Emission Standards for Hazardous Air Pollutants (NESHAP) are stationary source standards for hazardous air pollutants. Hazardous air pollutants (HAPs) are those pollutants that are known or suspected to cause cancer or other serious health effects. Building demolition could release HAPs such as asbestos into the air if proper regulations aren't followed. The presence of HAPs on a construction site will require the Contractor to develop appropriate plans for the removal of such pollutants prior to demolition, and may require additional permitting from State, regional, and local authorities.

Other considerations such as proper utility disconnection and safe building demolition are also considered and may require permits. If any demolition activity interferes with the public right-of-way, an obstruction permit will also need to be obtained from the appropriate authorities. It is the responsibility of the Contractor to follow all Federal, State, regional, and local regulations and obtain the appropriate

permits dealing with building demolition and right-of-way obstruction.

4.2.21 Utility Permits

Any project that requires utility construction or connection will likely require a permit from local authorities. It is the responsibility of the contractor to review all local regulations and obtain all permits and fees relating to utility construction and connections. Utility installations that will likely require permitting are electric, gas, drinking water, communication, and sanitary sewer utility installations. The Contractor is responsible for contacting the provider for each of the utilities and coordinate permitting and installation with the utility providers.

4.2.22 Aquatic Resource Alteration Permits (Not Applicable - Tennessee Permit)

Construction involving the temporary or permanent alteration of aquatic resources will require State, regional, or local permitting. The Contractor is responsible for reviewing State, regional and local laws as well as regulations and coordinating with appropriate authorities to determine if an aquatic resource alteration permit is necessary. Actions such as the temporary or permanent diversion of a stream, depositing of fill material into a stream, pond, lake, or wetland, and other similar activities will likely trigger the need for a permit.

4.2.23 Construction Permit

New construction may require a construction or building permit from State, regional, or local authorities prior to the beginning of construction. It is the responsibility of the Contractor to review State, regional and local laws and regulations and to obtain a construction permit if required.

4.2.24 Permit Variances

State, regional, and local authorities may allow modifications to be made in areas covered by existing permits. The permitting agency may be able to issue a permit variance for either a temporary or one-time exceedance of conditions specified in the existing permit. The Contractor should coordinate with permitting authorities if a variance will be necessary for the completion of the project.

-- End of Section --

SECTION 01 74 19

CONSTRUCTION WASTE MANAGEMENT AND DISPOSAL
02/19, CHG 3: 11/21

PART 1 GENERAL

1.1 DEFINITIONS

1.1.1 Co-mingle

The practice of placing unrelated materials together in a single container, usually for benefits of convenience and speed.

1.1.2 Construction Waste

Waste generated by construction activities, such as scrap materials, damaged or spoiled materials, temporary and expendable construction materials, and other waste generated by the workforce during construction activities.

1.1.3 Demolition Debris/Waste

Waste generated from demolition activities, including minor incidental demolition waste materials generated as a result of Intentional dismantling of all or portions of a building, to include clearing of building contents that have been destroyed or damaged.

1.1.4 Disposal

Depositing waste in a solid waste disposal facility, usually a managed landfill or incinerator, regulated in the US under the Resource Conservation and Recovery Act (RCRA).

1.1.5 Diversion

The practice of diverting waste from disposal in a landfill or incinerator, by means of eliminating or minimizing waste, or reuse of materials.

1.1.6 Final Construction Waste Diversion Report

A written assertion by a material recovery facility operator identifying constituent materials diverted from disposal, usually including summary tabulations of materials, weight in short-ton.

1.1.7 Recycling

The series of activities, including collection, separation, and processing, by which products or other materials are diverted from the solid waste stream for use in the form of raw materials in the manufacture of new products sold or distributed in commerce, or the reuse of such materials as substitutes for goods made of virgin materials, other than fuel.

1.1.8 Reuse

The use of a product or materials again for the same purpose, in its

original form or with little enhancement or change.

1.1.9 Salvage

Usable, salable items derived from buildings undergoing demolition or deconstruction, parts from vehicles, machinery, other equipment, or other components.

1.1.10 Source Separation

The practice of administering and implementing a management strategy to identify and segregate unrelated waste at the first opportunity.

1.2 CONSTRUCTION WASTE (INCLUDES DEMOLITION DEBRIS/WASTE)

Divert a minimum of 60 percent by weight of the project construction waste and demolition debris/waste from the landfill or incinerator. Follow applicable industry standards in the management of waste. Apply sound environmental principles in the management of waste. (1) Practice efficient waste management when sizing, cutting, and installing products and materials and (2) use all reasonable means to divert construction waste and demolition debris/waste from landfills and incinerators and to facilitate the recycling or reuse of excess construction materials.

1.3 CONSTRUCTION WASTE MANAGEMENT

Implement a Construction Waste Management Program for the project. Take a pro-active, responsible role in the management of construction waste, recycling process, disposal of demolition debris/waste, and require all subcontractors, vendors, and suppliers to participate in the Construction Waste Management Program. Establish a process for clear tracking, and documentation of construction waste and demolition debris/waste.

1.3.1 Implementation of Construction Waste Management Program

Develop and document how the Construction Waste Management Program will be implemented in a Construction Waste Management Plan. Submit a Construction Waste Management Plan to the Contracting Officer for approval. Construction waste and demolition debris/waste materials include un-used construction materials not incorporated in the final work, as well as demolition debris/waste materials from demolition activities or deconstruction activities. In the management of waste, consider the availability of viable markets, the condition of materials, the ability to provide material in suitable condition and in a quantity acceptable to available markets, and time constraints imposed by internal project completion mandates.

1.3.2 Oversight

The Quality Control Manager, as specified in Section 01 45 00 QUALITY CONTROL, is responsible for overseeing and documenting results from executing the Construction Waste Management Plan for the project.

1.3.3 Special Programs

Implement special programs involving rebates or similar incentives related to recycling of construction waste and demolition debris/waste materials. Retain revenue or savings from salvaged or recycling, unless otherwise directed. Ensure firms and facilities used for recycling, reuse, and

disposal are permitted for the intended use to the extent required by federal, state, and local regulations.

1.3.4 Special Instructions

Provide on-site instruction of appropriate separation, handling, recycling, salvage, reuse, and return methods to be used by all parties at the appropriate stages of the projects. Designation of single source separating or commingling will be clearly marked on the containers.

1.3.5 Waste Streams

Delineate waste streams and characterization, including estimated material types and quantities of waste, in the Construction Waste Management Plan. Manage all waste streams associated with the project. Typical waste streams are listed below. Include additional waste steams not listed:

a. Land Clearing Debris

b. Asphalt

c. Masonry and CMU

d. Concrete

e. Metals (Includes, but is not limited to, banding, stud trim, ductwork, piping, rebar, roofing, other trim, steel, iron, galvanized, stainless steel, aluminum, copper, zinc, bronze.)

f. Wood (nails and staples allowed)

g. Glass

h. Paper

i. Plastics (PET, HDPE,PVC,LDPE,PP,PS, Other)

j. Gypsum

k. Non-hazardous paint and paint cans

l. Carpet

m. Ceiling Tiles

n. Insulation

o. Beverage Containers

1.4 SUBMITTALS

Government approval is required for submittals with a "G" or "S" classification. Submittals not having a "G" or "S" classification are for information only. When used, a code following the "G" classification identifies the office that will review the submittal for the Government. Submit the following in accordance with Section 01 33 00 SUBMITTAL PROCEDURES:

SD-01 Preconstruction Submittals

Construction Waste Management Plan; G,

SD-06 Test Reports

Quarterly Reports

Annual Report

SD-11 Closeout Submittals

Final Construction Waste Diversion Report; S

1.5 MEETINGS

Conduct Construction Waste Management meetings. After award of the Contract and prior to commencement of work, schedule and conduct a meeting with the Contracting Officer to discuss the proposed Construction Waste Management Plan and to develop a mutual understanding relative to the management of the Construction Waste Management Program and how waste diversion requirements will be met.

The requirements of this meeting may be fulfilled during the coordination and mutual Understanding meeting outlined in Section 01 45 00 QUALITY CONTROL. At a minimum, discuss and document waste management goals at following meetings:

a. Preconstruction meeting.

b. Regular site meetings.

c. Work safety meeting (if applicable).

1.6 CONSTRUCTION WASTE MANAGEMENT PLAN

Submit Construction Waste Management Plan within 15 days after notice to proceed. Revise and resubmit Construction Waste Management Plan as necessary, in order for construction to begin.. Submit Construction Waste Management Plan not less than 60 calendar days before scheduled final site or building design approval. Revise and resubmit Construction Waste Management Plan until it receives final approval from the Contracting Officer, in order for construction to begin. Execute demolition or deconstruction activities in accordance with Section 02 41 00 DEMOLITION . Manage demolition debris/waste or deconstruction materials in accordance with the approved construction waste management plan.

An approved Construction Waste Management Plan will not relieve the Contractor of responsibility for compliance with applicable environmental regulations or meeting project cumulative waste diversion requirement. Ensure all subcontractors receive a copy of the approved Construction Waste Management Plan. The plan demonstrates how to meet the project waste diversion requirement. Also, include the following in the plan:

a. Identify the names of individuals responsible for waste management and waste management tracking, along with roles and responsibilities on the project.

b. Actions that will be taken to reduce solid waste generation, including coordination with subcontractors to ensure awareness and participation.

c. Description of the regular meetings to be held to address waste management.

d. Description of the specific approaches to be used in recycling/reuse of the various materials generated, including the areas on site and equipment to be used for processing, sorting, and temporary storage of materials.

e. Name of landfill and incinerator to be used.

f. Identification of local and regional re-use programs, including non-profit organizations such as schools, local housing agencies, and organization that accept used materials such as material exchange networks and resale stores. Include the name, location, phone number for each re-use facility identified, and provide a copy of the permit or license for each facility.

g. List of specific materials, by type and quantity, that will be salvaged for resale, salvaged and reused on the current project, salvaged and stored for reuse on a future project, or recycled. Identify the recycling facilities by name, address, and phone number.

h. Identification of materials that cannot be recycled or reused with an explanation or justification, to be approved by the Contracting Officer.

i. Description of the means by which materials identified in item (g) above will be protected from contamination.

j. Description of the means of transportation of the recyclable materials (whether materials will be site-separated and self-hauled to designated centers, or whether mixed materials will be collected by a waste hauler and removed from the site).

k. Copy of training plan for subcontractors and other services to prevent contamination by co-mingling materials identified for diversion and waste materials.

Distribute copies of the waste management plan to each subcontractor, Quality Control Manager, and the Contracting Officer.

1.7 RECORDS (DOCUMENTATION)

1.7.1 General

Maintain records to document the types and quantities of waste generated and diverted though re-use, recycling and sale to third parties; through disposal to a landfill or incinerator facility. Provide explanations for materials not recycled, reused or sold. Collect and retain manifests, weight tickets, sales receipts, and invoices specifically identifying diverted project waste materials or disposed materials.

1.7.2 Accumulated

Maintain a running record of materials generated and diverted from landfill disposal, including accumulated diversion rates for the project. Make records available to the Contracting Officer during construction or incidental demolition activities. Provide a copy of the diversion records

to the Contracting Officer upon completion of the construction, incidental demolitions or minor deconstruction activities.

1.8 REPORTS

1.8.1 General

Maintain current construction waste diversion information on site for periodic inspection by the Contracting Officer. Include in the quarterly reports, annual reports and final reports: the project name, contract information, information for waste generated, diverted and disposed of for the current reporting period and show cumulative totals for the project. Reports must identify quantifies of waste by type and disposal method. Also include in each report, supporting documentation to include manifests, weigh tickets, receipts, and invoices specifically identifying the project and waste material type and weighted sum.

1.8.2 Quarterly Reporting

Provide cumulative reports at the end of each quarter (December, March, June, and September, corresponding with the federal fiscal year for reporting purposes). Submit quarterly reports not later than 15 calendar days after the preceding quarter has ended.

1.8.3 Annual Reporting

Provide a cumulative construction waste diversion report annually. Submit annual report not later than 30 calendar days after the preceding fourth quarter has ended.

1.9 FINAL CONSTRUCTION WASTE DIVERSION REPORT

A Final Construction Waste Diversion Report is required at the end of the project. Provide Final Construction Waste Diversion Report 60 days prior to the Beneficial Occupancy Date (BOD). The final Construction Waste Diversion Report must be included in the Sustainability eNotebook in accordance with Section 01 33 29 SUSTAINABILITY REQUIREMENTS AND REPORTING.

1.10 COLLECTION

Collect, store, protect, and handle reusable and recyclable materials at the site in a manner which prevents contamination, and provides protection from the elements to preserve their usefulness and monetary value. Provide receptacles and storage areas designated specifically for recyclable and reusable materials and label them clearly and appropriately to prevent contamination from other waste materials. Keep receptacles or storage areas neat and clean.

Train subcontractors and other service providers to either separate waste streams or use the co-mingling method as described in the Construction Waste Management Plan. Handle hazardous waste and hazardous materials in accordance with applicable regulations and coordinate with Section 01 57 19 TEMPORARY ENVIRONMENTAL CONTROLS and Section 02 81 00 TRANSPORTATION AND DISPOSAL OF HAZARDOUS MATERIALS. Separate materials by one of the following methods:

1.10.1 Source Separation Method

Separate waste products and materials that are recyclable from trash and sort as described below into appropriately marked separate containers and then transport to the respective recycling facility for further processing. Deliver materials in accordance with recycling or reuse facility requirements (e.g., free of dirt, adhesives, solvents, petroleum contamination, and other substances deleterious to the recycling process). Separate materials into the category types as defined in the Construction Waste Management Plan.

1.10.2 Other Methods

Other methods proposed by the Contractor may be used when approved by the Contracting Officer.

1.11 DISPOSAL

Control accumulation of waste materials and trash. Recycle or dispose of collected materials off-site at intervals approved by the Contracting Officer and in compliance with waste management procedures as described in the waste management plan. Except as otherwise specified in other sections of the specifications, dispose of in accordance with the following:

1.11.1 Reuse

Give first consideration to reusing construction and demolition materials as a disposition strategy. Recover for reuse materials, products, and components as described in the approved Construction Waste Management Plan. Coordinate with the Contracting Officer to identify onsite reuse opportunities or material sales or donation available through Government resale or donation programs. Sale of recovered materials is not allowed on the Installation. Consider the use of surplus industrial supply broker services, who match entities with reusable or repurpose industrial materials with entities with need of such materials.

1.11.2 Recycle

Recycle non-hazardous construction and demolition/debris materials that are not suitable for reuse. Track rejection of contaminated recyclable materials by the recycling facility. Rejected recyclables materials will not be counted as a percentage of diversion calculation. Recycle all fluorescent lamps, HID lamps, mercury (Hg) -containing thermostats and ampoules, and PCBs-containing ballasts and electrical components as directed by the Contracting Officer. Do not crush lamps on site as this creates a hazardous waste stream with additional handling requirements.

1.11.3 Compost

Consider composting on site if a reasonable amount of compostable materials will be available and a utilization of compostable material can be determined and appropriately planned for. Compostable materials include plant materials, sawdust and certain food scraps. Composting as a strategy must be explicitly addressed in the Construction Waste Management Plan submitted for approval to ensure it is feasible.

1.11.4 Waste

Dispose by landfill or incineration only those waste materials with no practical use, economic benefit, or recycling opportunity.

PART 2 PRODUCTS

Not used.

PART 3 EXECUTION

Not used. -- End of Section --

P2# 519087 - DSSC DLA Repair Building 27
Columbus, OH

SECTION 01 78 23

OPERATION AND MAINTENANCE DATA
05/23, CHG 1: 05/25

PART 1 GENERAL

1.1 REFERENCES

The publications listed below form a part of this specification to the extent referenced. The publications are referred to within the text by the basic designation only.

AMERICAN SOCIETY OF HEATING, REFRIGERATING AND AIR-CONDITIONING ENGINEERS (ASHRAE)

ASHRAE GUIDELINE 1.4	(2019) Preparing Systems Manuals for Facilities

ASTM INTERNATIONAL (ASTM)

ASTM E1971	(2024) Standard Guide for Stewardship for the Cleaning of Commercial and Institutional Buildings
ASTM E2166	(2016; R 2023) Standard Practice for Organizing and Managing Building Data

1.2 SUBMITTALS

Government approval is required for submittals with a "G" or "S" classification. Submittals not having a "G" or "S" classification are for information only. When used, a code following the "G" classification identifies the office that will review the submittal for the Government. Submit the following in accordance with Section 01 33 00 SUBMITTAL PROCEDURES:

SD-10 Operation and Maintenance Data

Facility Data Workbook; G,

Training Plan; G,

Training Outline; G,

Training Content; G,

Operation And Maintenance Manual, Progress Submittal; G,

Operation And Maintenance Manual, Prefinal Submittal; G,

Operation And Maintenance Manual, Final Submittal; G,

SD-11 Closeout Submittals

Training Video Recording; G,

Validation of Training Completion; G,

Training Plan; G,

Record Drawings And Utility Systems; G,

1.3 MEETINGS

To assure that Operation and Maintenance Manual and Facility Data Workbook requirements are being met through the duration of the project, organize the following meetings and discuss the subsequent topics:

1.3.1 Pre-Construction Meeting

At a minimum, discuss the following:

a. The requirement for Operation and Maintenance Manuals and Facility Data deliverables under this contract including coordination meetings

b. Processes and method of gathering Facility Data information during construction

c. Primary roles and responsibilities associated with the development and delivery of the Operation and Maintenance Manuals and Facility Data deliverables, and

d. Identify and agree upon a date and attendance list for the meetings described below:

1.3.2 Operation and Maintenance Manual and Facility Data Workbook Coordination Meeting

Facilitate a meeting after the Pre-Construction Meeting prior to the submission of the Operation and Maintenance Manual Progress Submittal. Meeting attendance must include the Contractor's Operation and Maintenance Manual and Facility Data Workbook Preparer, Quality Control Manager, the Commissioning Authority (CxA), the Government's Design Manager (DM), Contracting Officer's Representative, and Government's facility data reviewer. Include any Mechanical, Electrical, and Fire Protection Sub-Contractors.

The purpose of this meeting is to reach a mutual understanding of the scope of work concerning the contract requirements for Operation and Maintenance Manual and coordinate the efforts necessary by both the Government and Contractor to ensure an accurate collection, preparation and timely Government review of Operation and Maintenance Manual.

1.3.3 Submittal Coordination Meeting

Facilitate a meeting following submission and Government review of each design or progress submittal of the Operation and Maintenance Manual and Facility Data Workbook.

a. Include personnel from the Coordination meeting and any additional personnel identified.

b. The purpose of this meeting is to demonstrate ongoing compliance with the requirements identified in this specification. Discuss Government review comments and unresolved items preventing completion and Government approval of the Operation and Maintenance Manuals and

Facility Data Workbook (FDW).

c. The applicable deliverables, along with Government remarks associated with review of these submittals serve as the primary guide and agenda for this meeting.

1.4 FACILITY DATA WORKBOOK

Develop an editable, electronic spreadsheet based on the equipment in the Operation and Maintenance Manuals that contains the information required to start a preventive maintenance program. As a minimum, provide Facility Data Workbook as a list of system equipment, location installed, warranty expiration date, manufacturer, model, and serial number.

1.5 OPERATION AND MAINTENANCE MANUAL MEDIA

Assemble Operation and Maintenance Manual into an electronically bookmarked file using the most current version of Adobe Acrobat or similar software capable of producing PDF file format. Provide compact disks (CD) or data digital versatile disk (DVD) as appropriate, so that each one contains operation, maintenance and record files, project record documents, and training videos. Include a complete bookmarked operation and maintenance directory.

1.5.1 CD or DVD Label and Disk Holder or Case

Provide the following information on the disk label and disk holder or case:

a. Building Number

b. Project Title

c. Activity and Location

d. Construction Contract Number

e. Prepared For: (Contracting Agency)

f. Prepared By: (Name, title, phone number and email address)

g. Include the disk content on the disk label

h. Date

i. Virus scanning program used

1.5.2 O&M Manual Tabbed Hard Copy

Provide a hard copy of the O&M manual upon completion of the project. Provide tabs for each section and subsection for ease of navigation by the user.

1.6 O&M MANUAL CONTENT

Organize the bookmarked Operation and Maintenance Manual into the following Parts in accordance with ASHRAE GUIDELINE 1.4, and as modified and detailed below. Word template for O&M Manual is available at: www.wbdg.org/dod/ufgs/ufgs-01-78-23.

1.6.1 Part 1: Executive Summary

Provide a summary of the information found in the O&M manual including the purpose of the manual and a description of the manual's organization.

1.6.2 Part 2: Facility Design and Construction

1.6.2.1 General Facility and Systems Description

Provide an overview of the intent for design and use of the facility. Provide a PDF of the Record Drawings prepared in accordance with 01 78 00 CLOSEOUT SUBMITTALS and bookmarked using the sheet title and sheet number. Include uncluttered 11 by 17 inches floor plans with room numbers, type or function of space, and overall facility dimensions on the floor plans. Do not include items such as construction instructions, references, or frame numbers.

Detail the overall dimensions of the facility, number of floors, foundation type, expected number of occupants, and facility Category Code list and generally describe all the facility systems and any special building features (for example, HVAC Controls, Sprinkler Systems, Cranes, Elevators, and Generators). Include photographs marked up and labeled to show key operating components and the overall facility appearance.

1.6.2.2 Basis of Design

Provide a copy of the contract Basis of Design.

1.6.2.3 Contract Documents, RFP, Amendments, and Modifications

Provide the contract construction documents complete, to include specifications, drawings, Request for Proposal, amendments, and modifications.

1.6.2.4 Room Inventory of Real Property and Finishes

Provide a list of installed equipment furnished under this contract. Include all information usually listed on manufacturer's name plate. Include, as applicable, the following information for each piece of equipment installed: description of item, all dimensions, location by room number, model number, serial number, capacity, name and address of manufacturer, name and address of equipment supplier, condition, spare parts list, manufacturer's catalog, and warranty. Real property includes, but is not limited to, floor coverings, wall surfaces, ceiling surfaces, windows, roofing, HVAC filters, plumbing fixtures, and lighting fixtures. Submit the final list 30 days after transfer of the completed facility.

Include spatial data defining actual net square footage and data of each room. Also include the room finish schedule including room names and numbers. Include schedules in the construction drawings in the room inventory. Add a column to each schedule to record what was provided by the contractor during construction. Provide a PDF of room inventory. Key the designations to the related area depicted on the contract drawings. List the following data:

RECORD OF DESIGNATED EQUIPMENT AND MATERIALS DATA				
Description	Specification Section	Manufacturer and Catalog, Model, and Serial Number	Composition and Size	Where Used

1.6.3 Part 3: Facilities, Systems, and Assemblies Information

1.6.3.1 Organization

Bookmark information in this section using the current version of ASTM E2166 Uniformat II, UFGS numbers, and document type as outlined in the example below. Bookmark/tab each item to the third level for easy navigation of the manual.

Example as shown in Table below:

PARTS AND SUBPART NUMBERING
3.1 B20 EXTERIOR CLOSURE (System)
3.1.1 B2030 EXTERIOR DOORS (Subsystem)
3.1.1.1 B2030110 GLAZED DOORS (Component)
3.1.1.1.1 Applicable specifications List in UFGS Format
3.1.1.1.2 Manufacturer's Operations and Maintenance Data
3.1.1.1.3 Approved Submittal
3.1.1.1.4 Coordination/Shop Drawings
3.1.1.1.5 Sequence of Operation for Operating Equipment
3.1.1.1.6 Testing Equipment Information and Performance Data
3.1.1.1.7 Routine Maintenance Requirements
3.1.1.1.8 Repair Procedures
3.1.1.1.9 Emergency Procedures & Locations of Applicable Controls
3.1.1.1.10 Warranties
3.1.1.1.11 Record Drawings and Utility Systems
3.1.1.1.12 Contractor / Supplies Listing and Contact Information

1.6.3.2 Related Specifications

Reference each specification related to the subsystem in this section, and locate the actual specification section in Part 2 of the O&M Manual. List

specifications in table format as shown in the below example.

UFGS Number	Specification Title	Page Spec Begins in Part 2

1.6.3.3 Manufacturer's Operations and Maintenance Data

Provide a copy of all manufacturer specifications and cutsheets. Provide text-searchable, high-quality document files from the manufacturer's online or electronic documentation. Color documents are preferred. Provide documents specific to the product(s) installed under this Contract. Provide identification and coverage for the parts of each component, assembly, subassembly, and accessory of the end items subject to replacement. Provide Uniformat II Level 3 identification for D20, D30, D40 installed equipment. When possible, do not submit document files containing multiple product catalogs from the same manufacturer, or product data from multiple manufacturers in the same files. Provide documents directly from the manufacturer whenever possible. Do not provide scanned copies of hardcopy documents. Provide identification and coverage for the parts of each component, assembly, subassembly, and accessory of the end items subject to replacement. Include special hardware requirements, such as requirement to use high-strength bolts and nuts. Identify parts by make, model, serial number, and source of supply to allow reordering without further identification. Provide clear and legible illustrations, drawings, and exploded views to enable easy identification of the items. When illustrations omit the part numbers and description, both the illustrations and separate listing must show the index, reference, or key number that will cross-reference the illustrated part to the listed part. Group the parts shown in the listings by components, assemblies, and subassemblies in accordance with the manufacturer's standard practice. Parts data may cover more than one model or series of equipment, components, assemblies, subassemblies, attachments, or accessories, such as typically shown in a master part catalog.

1.6.3.4 Approved Submittals and Certificates

Provide a copy of all submittals documented with the required approval as applicable for each UFGS specification listed in the table outlined in applicable specifications. Include copies of SD-07 Certificates submittals documented with the required approval, SD-08 Manufacturer's Instructions submittals documented with the required approval, and SD-10 Operation and Maintenance Data submittals documents with the required approval.

1.6.3.5 Approved Coordination/Shop Drawings

Drawings, diagrams and schedules specifically prepared to illustrate some portion of the work. Diagrams and instructions from a manufacturer or fabricator for use in producing the product and as aids to the Contractor for integrating the product or system into the project. Drawings prepared by or for the Contractor to show how multiple systems and

interdisciplinary work will be coordinated.

1.6.4 Sequence of Operation for Operating Equipment

Provide record one-line diagrams for each floor, delineating mechanical equipment location within the building. Provide specific instructions, procedures, and illustrations for the following phases of operation for the installed model and features of each system:

1.6.4.1 Safety Precautions and Hazards

List personnel hazards and equipment or product safety precautions for operating conditions. List all residual hazards identified in the Activity Hazard Analysis provided under Section 01 35 26 GOVERNMENTAL SAFETY REQUIREMENTS. Provide recommended safeguards for each identified hazard. Specify if any certifications or licenses are required to operate the equipment.

1.6.4.2 Operator Prestart

Provide procedures required to install, set up, and prepare each system for use.

1.6.4.3 Startup, Shutdown, and Post-Shutdown Procedures

Provide narrative description for Startup, Shutdown and Post-shutdown operating procedures including the control sequence for each procedure.

1.6.4.4 Normal Operations

Provide Control Diagrams with data to explain operation and control of systems and specific equipment. Provide narrative description of Normal Operating Procedures.

1.6.4.5 Emergency Operations

Provide Emergency Procedures for equipment malfunctions to permit a short period of continued operation or to shut down the equipment to prevent further damage to systems and equipment. Provide Emergency Shutdown Instructions for fire, explosion, spills, or other foreseeable contingencies. Provide guidance and procedures for emergency operation of utility systems including required valve positions, valve locations and zones or portions of systems controlled.

1.6.4.6 Operator Service Requirements

Provide instructions for services to be performed by the operator such as lubrication, adjustment, inspection, and recording gauge readings.

1.6.4.7 Environmental Conditions

Provide a list of Environmental Conditions (temperature, humidity, and other relevant data) that are best suited for the operation of each product, component or system. Describe conditions under which the item equipment should not be allowed to run.

1.6.4.8 Operating Log

Provide forms, sample logs, and instructions for maintaining necessary

operating records.

1.6.4.9 Additional Requirements for Equipment Control Systems

Provide Data Package 5 and the following for all control systems:

a. Provide a narrative description on how to perform and apply functions, features, modes, and other operations, including unoccupied operation, seasonal changeover, manual operation, and alarms. Include detailed technical manual for programming and customizing control loops and algorithms.

b. Submit complete controls equipment schedules, full as-built sequence of operations, wiring and logic diagrams, Input/Output Tables, equipment schedules, copies of checkout tests and calibrations performed by the Contractor (not Cx tests), and all associates information.

c. Full points list. Provide a listing of rooms with the following information for each room:

(1) Floor

(2) Room number

(3) Room name

(4) Air handler unit ID

(5) Reference drawing number

(6) Air terminal unit tag ID

(7) Heating or cooling valve tag ID

(8) Minimum cfm

(9) Maximum cfm

d. Full print out of all schedules and set points after testing and acceptance of the system.

e. Full as-built print out of software program.

f. Marking of system sensors and thermostats on the as-built floor plan and mechanical drawings with their control system designations.

1.6.4.10 Testing Equipment Information and Performance Data

Include information on test equipment required to perform specified tests and on special tools needed for the operation, maintenance, and repair of components. Provide final set points.

Include completed prefunctional checklists, functional performance test forms, and monitoring reports. Include recommended schedule for retesting and blank test forms. Provide final set points.

1.6.5 Routine Maintenance Requirements

1.6.5.1 Preventive Maintenance Plan, Schedule, and Procedures

Provide manufacturer's schedule for routine preventive maintenance, inspections, condition monitoring (predictive tests) and adjustments required to ensure proper and economical operation and to minimize repairs. Provide instructions stating when the systems should be retested. Provide manufacturer's projection of preventive maintenance work-hours on a daily, weekly, monthly, and annual basis including requirements by type of activity. For periodic calibrations, provide manufacturer's specified frequency and procedures for each separate operation.

a. Define the anticipated time required to perform each test (work-hours), test apparatus, number of personnel identified by responsibility, and a testing validation procedure permitting the record operation capability requirements within the schedule. Provide a remarks column for the testing validation procedure referencing operating limits of time, pressure, temperature, volume, voltage, current, acceleration, velocity, alignment, calibration, adjustments, cleaning, or special system notes. Delineate procedures for preventive maintenance, inspection, adjustment, lubrication and cleaning necessary to minimize repairs.

b. Repair requirements must inform operators how to check out, troubleshoot, repair, and replace components of the system. Include electrical and mechanical schematics and diagrams and diagnostic techniques necessary to enable operation and troubleshooting of the system after acceptance.

1.6.5.2 Lubrication Data

Include the following preventive maintenance lubrication data, in addition to instructions for lubrication required under paragraph OPERATOR SERVICE REQUIREMENTS:

a. A table showing recommended lubricants for specific temperature ranges and applications.

b. Charts with a schematic diagram of the equipment showing lubrication points, recommended types and grades of lubricants, and capacities. Provide procedural instructions for Oil Sampling for all equipment.

c. A Lubrication Schedule showing service interval frequency.

1.6.6 Repair Procedures

Provide instructions and a list of tools required to repair or restore the product or equipment to proper condition or operating standards. Provide manufacturer's recommended procedures and instructions for correcting problems and making repairs for the installed model and features of each system. Include potential environmental and indoor air quality impacts of recommended maintenance procedures and materials. Specify if any certifications or licenses are required to repair the equipment.

1.6.6.1 Troubleshooting Guides and Diagnostic Techniques

Provide step-by-step procedures to promptly isolate the cause of typical

malfunctions. Describe clearly why the checkout is performed and what conditions are to be sought. Identify tests or inspections and test equipment required to determine whether parts and equipment may be reused or require replacement.

1.6.6.2 Wiring Diagrams and Control Diagrams

Provide point-to-point drawings of wiring and control circuits including factory-field interfaces. Provide a complete and accurate depiction of the actual job specific wiring and control work. On diagrams, number electrical and electronic wiring and pneumatic control tubing and the terminals for each type, identically to actual installation configuration and numbering.

1.6.6.3 Removal and Replacement Instructions

Provide step-by-step procedures and a list of required specialty tools and supplies for removal, replacement, disassembly, and assembly of components, assemblies, subassemblies, accessories, and attachments. Provide tolerances, dimensions, settings and adjustments required. Use a combination of text and illustrations.

1.6.6.4 Repair Work-Hours

Provide manufacturer's projection of repair work-hours including requirements by type of craft. Identify, and tabulate separately, repair that requires the equipment manufacturer to complete or to participate.

1.6.6.5 Warranty Information

List and explain the various warranties and clearly identify the servicing and technical precautions prescribed by the manufacturers or contract documents in order to keep warranties in force. Identify if replacement of a subassembly, attachment or accessory requires the entire assembly to be replaced. Include warranty information for primary components of the system. Provide copies of warranties required by Section 01 78 00 CLOSEOUT SUBMITTALS.

1.6.6.6 Extended Warranty Information

List all warranties for products, equipment, components, and sub-components whose duration exceeds one year. For each warranty listed, indicate the applicable specification section, duration, start date, end date, and the point of contact for warranty fulfillment. Also, list or reference the specific operation and maintenance procedures that must be performed to keep the warranty valid. Provide copies of warranties required by Section 01 78 00 CLOSEOUT SUBMITTALS.

1.6.6.7 Record Drawings and Utility Systems

The record drawings are the final compilation of actual conditions reflected in the as-built drawings. Provide record drawings as outlined in 01 78 00 CLOSEOUT SUBMITTALS.

Using Record Source Drawings, show and document details of the actual installation of the utility systems, annotate and highlight the Operation and Maintenance information. Provide the following drawings at a large enough scale to differentiate designated isolation units from surrounding valves and switches.

1.6.6.8 Personnel Training Requirements

Provide information available from the manufacturers that is needed for use in training designated personnel to properly operate and maintain the equipment and systems.

1.6.6.9 Contractor / Supplier Listing and Contact Information

Provide a list that includes the name, address, telephone number, email and website of the General Contractor and each Subcontractor who installed the product or equipment, or system. For each item, also provide the name address and telephone number of the manufacturer's representative and service organization that can provide replacements most convenient to the project site. Provide the name, address, and telephone number of the product, equipment, and system manufacturers.

1.6.7 Part 4: Facility Operations

1.6.7.1 Completed Facility Operating Plan

Provide a plan that documents that procedures for the operation of systems and assemblies in the facility. The systems that should be included in the Operating Plan include, but are not limited to:

a. Electrical systems and equipment

b. Mechanical systems and equipment

c. Fire Protection systems and equipment

d. Control Systems and equipment

e. Architectural and Structural systems, fixtures, structures, and equipment

f. Vertical transportation such as elevators and escalators

1.6.7.2 Testing Equipment and Special Tool Information

Include information on test equipment required to perform specified tests and on special tools needed for the operation, maintenance, and repair of components. Provide final set points.

1.6.7.3 Testing and Performance Data

Include completed prefunctional checklists, functional performance test forms, and monitoring reports. Include recommended schedule for retesting and blank test forms. Provide final set points.

1.6.7.4 Approved Field Test Reports and Manufacturer's Field Reports

Compile and provide approved Field Test Reports (SD-06) and Manufacturer's Field Reports (SD-09) submittals.

1.6.7.5 Maintenance Plans, Procedures, Checklists, Records, and Spare Parts Inventory

1.6.7.5.1 Maintenance Schedules

Include recommended maintenance schedules for systems and equipment.

1.6.7.5.2 Ongoing Commissioning Operational and Maintenance Record Keeping

Include ongoing commissioning and optimization procedures and documentation to monitor and improve the performance of facility systems.

1.6.7.5.3 Janitorial and Cleaning Plans and Procedures

Include a copy of facility cleaning and janitorial plan with procedures and intended chemicals and equipment.

Provide environmentally friendly cleaning recommendations in accordance with ASTM E1971.

1.6.7.6 Utility Record Drawings

1.6.7.6.1 Utility Schematic Diagrams

Provide a one-line schematic diagram for each utility system such as power, water, wastewater, and gas/fuel. Schematic diagram must show from the point where the utility line is connected to the mainline up to the 5 foot connection point to the facility. Indicate location or area designation for route of transmission or distribution lines; locations of duct banks, manholes/handholes or poles; isolation units such as valves and switches; and utility facilities such as pump stations, lift stations, and substations.

1.6.7.6.2 Enlarged Connection and Cutoff Plans

Provide enlarged floor plans and provide information between the 5 foot utilities connection point and where utilities connect to facility distribution. Enlarge floor plans/elevations of the rooms where the utility enters the building and indicate on these plans the locations of the main interiors and exterior connection and cutoff points for the utilities. Also enlarge floor plans/elevations of the rooms where equipment is located. Include enough information to enable someone unfamiliar with the facility to locate the connection and cutoff points. Indicate designations such as room number, panel number, circuit breaker, or valve number of each utility and equipment connection and cutoff point, and what that connection and cutoff point controls.

1.6.7.6.2.1 Description of Utility Metering and Monitoring Systems

Provide in narrative format a description of the utility metering and monitoring systems. Include locations, function, and related systems.

1.6.7.6.2.2 Procedures for Tracking Utility Use and Reporting

Procedures for usage reporting and tracking in support of establishing and monitoring utility budgets and costs, and in developing annual energy reports.

1.6.7.6.2.3 One-Line Diagrams and Meter Location of System

Provide one-line diagrams and design drawings that highlight meter locations on the site.

1.6.7.6.3 Spare Parts and Supply Lists

Provide lists of spare parts and supplies required for repair to ensure continued service or operation without unreasonable delays. Special consideration is required for facilities at remote locations. List spare parts and supplies that have a long lead-time to obtain.

1.6.8 Part 5: Training

Provide a copy of training plans used for each type of equipment along with training materials used, arranged in specification sequence. Provide a copy of training records, sign-in sheets, and agendas. Include training and documentation on the updating and continued use of the O&M Manual.

1.6.9 Part 6: Cx Project Report and TAB Report

Provide the final Cx Plan and complete Cx reports with evaluation and testing forms and records for each building system. Include relevant commissioned system assemblies test reports including installers checklists of assemblies. Provide all Cx Progress Reports, issues and resolutions logs with resolution or status of each item, and a list of any open items and seasonal or additional testing required.

1.6.10 Part 7: Regulatory Requirements

Provide information describing regulatory and policies compliance requirements or provide a reference to where it is stored.

1.6.11 Part 8: Permits

Provide information requiring frequently asked questions and associated answers or provide a reference to where it is stored.

1.6.12 Part 9: Operations and Maintenance Manual Approval

Provide a signed document stating that the project O&M Manual has been reviewed and confirming agreement with the approach it presents. Include contact information for the signer for coordination of any future changes.

1.7 SCHEDULE OF OPERATION AND MAINTENANCE DATA PACKAGES

Provide the O&M data packages specified in individual technical sections. O&M Data Packages are one of the components of the O&M Manual. The information required in each type of data package follows:

1.7.1 Package Quality

Documents must be fully legible. Operation and Maintenance data must be consistent with the manufacturer's standard brochures, schematics, printed instructions, general operating procedures, and safety precautions.

1.7.2 Data Package 1

a. Safety precautions and hazards

b. Cleaning recommendations

c. Maintenance and repair procedures

d. Warranty information

e. Extended warranty information

f. Contractor information

g. Spare parts and supply list

1.7.3 Data Package 2

a. Safety precautions and hazards

b. Normal operations

c. Environmental conditions

d. Lubrication data

e. Preventive maintenance plan, schedule, and procedures

f. Cleaning recommendations

g. Maintenance and repair procedures

h. Removal and replacement instructions

i. Spare parts and supply list

j. Parts identification

k. Warranty information

l. Extended warranty information

m. Contractor information

1.7.4 Data Package 3

a. Safety precautions and hazards

b. Operator prestart

c. Startup, shutdown, and post-shutdown procedures

d. Normal operations

e. Emergency operations

f. Environmental conditions

g. Operating log

h. Lubrication data

i. Preventive maintenance plan, schedule, and procedures

j. Cleaning recommendations

k. Troubleshooting guides and diagnostic techniques

l. Wiring diagrams and control diagrams

m. Maintenance and repair procedures

n. Removal and replacement instructions

o. Spare parts and supply list

p. Product submittal data

q. O&M submittal data

r. Parts identification

s. Warranty information

t. Extended warranty information

u. Testing equipment and special tool information

v. Testing and performance data

w. Contractor information

x. Field test reports

1.7.5 Data Package 4

a. Safety precautions and hazards

b. Operator prestart

c. Startup, shutdown, and post-shutdown procedures

d. Normal operations

e. Emergency operations

f. Operator service requirements

g. Environmental conditions

h. Operating log

i. Lubrication data

j. Preventive maintenance plan, schedule, and procedures

k. Cleaning recommendations

l. Troubleshooting guides and diagnostic techniques

m. Wiring diagrams and control diagrams

n. Repair procedures

o. Removal and replacement instructions

p. Spare parts and supply list

q. Repair work-hours

r. Product submittal data

s. O&M submittal data

t. Parts identification

u. Warranty information

v. Extended warranty information

w. Personnel training requirements

x. Testing equipment and special tool information

y. Testing and performance data

z. Contractor information

aa. Field test reports

1.7.6 Data Package 5

a. Safety precautions and hazards

b. Operator prestart

c. Start-up, shutdown, and post-shutdown procedures

d. Normal operations

e. Environmental conditions

f. Preventive maintenance plan, schedule, and procedures

g. Troubleshooting guides and diagnostic techniques

h. Wiring and control diagrams

i. Maintenance and repair procedures

j. Removal and replacement instructions

k. Spare parts and supply list

l. Product submittal data

m. Manufacturer's instructions

n. O&M submittal data

o. Parts identification

p. Testing equipment and special tool information

q. Warranty information

r. Extended warranty information

s. Testing and performance data

t. Contractor information

u. Field test reports

1.7.7 Changes to Submittals

Provide manufacturer-originated changes or revisions to submitted data if a component of an item is so affected subsequent to acceptance of the O&M Data. Submit changes, additions, or revisions required by the Contracting Officer for final acceptance of submitted data within 30 calendar days of the notification of this change requirement.

PART 2 PRODUCTS

Not used.

PART 3 EXECUTION

3.1 TRAINING

Prior to acceptance of the facility by the Contracting Officer for Beneficial Occupancy, provide comprehensive training for the systems and equipment specified in the technical specifications. The training must be targeted for the building maintenance personnel, and applicable building occupants. Instructors must be well-versed in the particular systems that they are presenting. Address aspects of the Operation and Maintenance Manual submitted in accordance with Section 01 78 00 CLOSEOUT SUBMITTALS. Training must include classroom or field lectures based on the system operating requirements. The location of classroom training requires approval by the Contracting Officer.

3.1.1 Training Plan

Submit a written training plan to the Contracting Officer for approval at least 60 calendar days prior to the scheduled training. Training plan must be approved by the Commissioning Authority (CxA) prior to forwarding to the Contracting Officer. Also, coordinate the training schedule with the Contracting Officer and CxA. Include within the plan the following elements:

a. Equipment included in training

b. Intended audience

c. Location of training

d. Dates of training

e. Objectives

f. Outline of the information to be presented and subjects covered including description

g. Start and finish times and duration of training on each subject

h. Methods (e.g. classroom lecture, video, site walk-through, actual operational demonstrations, written handouts)

i. Instructor names and instructor qualifications for each subject

j. List of texts and other materials to be furnished by the Contractor that are required to support training

k. Description of proposed software to be used for video recording of training sessions.

3.1.2 Training Content

The core of this training must be based on manufacturer's recommendations and the operation and maintenance information. The CxA is responsible for overseeing and approving the content and adequacy of the training. Spend 95 percent of the instruction time during the presentation on the OPERATION AND MAINTENANCE DATA. Include the following for each system training presentation:

a. Start-up, normal operation, shutdown, unoccupied operation, seasonal changeover, manual operation, controls set-up and programming, troubleshooting, and alarms.

b. Relevant health and safety issues.

c. Discussion of how the feature or system is environmentally responsive. Advise adjustments and optimizing methods for energy conservation.

d. Design intent.

e. Use of O&M Manual Files.

f. Review of control drawings and schematics.

g. Interactions with other systems.

h. Special maintenance and replacement sources.

i. Tenant interaction issues.

3.1.3 Training Outline

Provide the Operation and Maintenance Manual Files (Bookmarked PDF) and a written course outline listing the major and minor topics to be discussed by the instructor on each day of the course to each trainee in the course. Provide the course outline 14 calendar days prior to the training.

3.1.4 Training Video Recording

Record classroom training session(s) on video. Provide to the Contracting Officer two copies of the training session(s) in DVD video recording

format. Capture within the recording, in video and audio, the instructors' training presentations including question and answer periods with the attendees. The recording camera(s) must be attended by a person during the recording sessions to assure proper size of exhibits and projections during the recording are visible and readable when viewed as training.

3.1.5 Unresolved Questions from Attendees

If, at the end of the training course, there are questions from attendees that remain unresolved, the instructor must send the answers, in writing, to the Contracting Officer for transmittal to the attendees, and the training video must be modified to include the appropriate clarifications.

3.1.6 Validation of Training Completion

Ensure that each attendee at each training session signs a class roster daily to confirm Government participation in the training. At the completion of training, submit a signed validation letter that includes a sample record of training for reporting what systems were included in the training, who provided the training, when and where the training was performed, and copies of the signed class rosters. Provide two copies of the validation to the Contracting Officer, and one copy to the Operation and Maintenance Manual Preparer for inclusion into the Manual's documentation.

3.1.7 Quality Control Coordination

Coordinate this training with the CxA in accordance with Section 01 45 00 QUALITY CONTROL.

3.2 SUBMITTAL SCHEDULING

3.2.1 Operation and Maintenance Manual, Progress Submittal

Submit the Progress submittal when construction is approximately 50 percent complete, to the Contracting Officer for approval. Provide Operation and Maintenance Manual Files (Bookmarked PDF). Include the elements and portions of system construction completed up to this point. The purpose of this submittal is to verify progress is in accordance with contract requirements as discussed during the Operation and Maintenance Manual Coordination Meeting.

3.2.2 Operation and Maintenance Manual, Prefinal Submittal

Submit the 100 percent submittal of the Operation and Maintenance Prefinal Submittal to the Contracting Officer for approval a minimum of 60 calendar days prior to the Beneficial Occupancy Date (BOD).. This submittal must provide a complete, working document that can be used to operate and maintain the facility. Any portion of the submittal that is incomplete or inaccurate requires the entire submittal to be returned for correction. Any discrepancies discovered during the Government's review of Operation and Maintenance Progress submittal must be corrected prior to the Prefinal submission. The Prefinal Submittal must include Operation and Maintenance Manual Files (Bookmarked PDF).

3.2.3 Operation and Maintenance Manual, Final Submittal

Submit completed Operation and Maintenance Manual Files (Bookmarked PDF)

and one hard copy of the Operation and Maintenance Manuals. The Final submittal is due at BOD. Any discrepancies discovered during the Government's review of the Prefinal submittal, including the Field Verification, must be corrected prior to the Final submission.

-- End of Section --

P2# 519087 - DSSC DLA Repair Building 27
Columbus, OH

SECTION 01 91 00.15

BUILDING COMMISSIONING
05/23, CHG 3: 08/24

PART 1 GENERAL

Building Commissioning is a systematic, quality-focused process for enhancing the delivery of a project that focuses on verifying and documenting that all of the commissioned systems and assemblies are planned, designed, installed, tested, operated, and maintained to meet the project requirements. The purpose is to reduce the cost and performance risks associated with delivering facilities projects, and to increase value to owners, occupants, and users.

1.1 REFERENCES

The publications listed below form a part of this specification to the extent referenced. The publications are referred to within the text by the basic designation only.

AMERICAN SOCIETY OF HEATING, REFRIGERATING AND AIR-CONDITIONING ENGINEERS (ASHRAE)

ASHRAE 90.1 - IP	(2019) Energy Standard for Buildings Except Low-Rise Residential Buildings
ASHRAE 180	(2018) Standard Practice for Inspection and Maintenance of Commercial Building HVAC Systems
ASHRAE 202	(2024) Commissioning Process for Buildings and Systems

ASSOCIATED AIR BALANCE COUNCIL (AABC)

ACG Commissioning Guideline	(2005) Commissioning Guideline

NATIONAL ENVIRONMENTAL BALANCING BUREAU (NEBB)

NEBB S1110	(2019) Whole Building Technical Commissioning of New Construction; 2nd Edition

SHEET METAL AND AIR CONDITIONING CONTRACTORS' NATIONAL ASSOCIATION (SMACNA)

ANSI/SMACNA 014	(2013) HVAC Systems Commissioning Manual, 2nd Edition

U.S. ARMY CORPS OF ENGINEERS (USACE)

ER 25-345-1	(2019) Commissioning -- Systems Manual

1.2 DEFINITIONS

Commissioning Process (Cx) - a quality-focused process for enhancing the delivery of a project. Refer to ASHRAE 202 for a comprehensive

description of the commissioning process.

Lead Commissioning Specialist (CxC) - The entity who leads, plans, and coordinates the Commissioning Team. The terms Commissioning Provider, Commissioning Firm, Lead Commissioning Specialist, Commissioning Specialist, and Commissioning Authority (CA or CxA) when used by sustainable Third Party Certification (TPC) programs, are interchangeable.

Commissioning Authority – The Government retains the authority for oversight and assurance of the entire commissioning process, and final approval of all commissioning deliverables.

Commissioning Coordinator - Responsible to ensure and assist all trades ensure completion of all phases of work required for the Commissioning process. This person must be an employee of the Commissioning Contractor and must have direct communication with the Contracting Officer's Representative regarding all elements of the commissioning process. The commissioning coordinator must have a minimum of 5 year experience in mechanical and/or Building Automation.

Government Acceptance Testing Representatives - Government Acceptance Testing Representatives perform the inherently Governmental function of technical oversight and quality assurance for critical systems, and is distinctly separate from the commissioning process. Government Acceptance Testing Representatives witness final testing of critical systems and report systems' acceptance to the COR. Submittals to be surveilled and approved by Government Acceptance Testing Representatives are identified in Section 01 33 00 SUBMITTAL PROCEDURES. Testing required to be witnessed by Government
Acceptance Testing Representatives are identified in system level sections.

Owner's Project Requirements (OPR) - document that details the stakeholders' requirements for the project and the expectations for how it will be used and operated. The OPR is provided for commissioning review purposes only and is not a contract requirement.

Owner's Project Requirements (OPR) - document that details the stakeholders' requirements for the project and the expectations for how it will be used and operated. The OPR is provided for commissioning review purposes only and is not a contract requirement.

1.3 COMMUNICATION WITH THE GOVERNMENT

The Lead Commissioning Specialist (CxC) must submit all plans, schedules, reports, and documentation directly to the Contracting Officer's Representative concurrent with submission to the Quality Control (QC) Manager.

The Lead Commissioning Specialist must have direct communication with the Contracting Officer's Representative regarding all elements of the commissioning process; however, the Government has no direct contract authority with the Lead Commissioning Specialist.

1.4 SYSTEMS TO BE COMMISSIONED

Coordinate commissioning and quality control activities for the following systems, equipment, and associated controls. System-specific requirements are located in the associated specification sections. Commission the following systems, equipment, and associated controls in accordance with

this section and the inspection, testing, and quality control requirements of their respective sections:

Heating, ventilating, air-conditioning, and refrigeration systems (mechanical and passive) and associated controls (HVAC)

Lighting systems: interior and exterior, automatic and manual daylighting controls, occupancy sensing devices, automatic shut-off controls, time switching, and other lighting control devices, and dimming systems

Service hot-water systems and controls

Building Control Systems

Cybersecurity for Facility-Related Control Systems

1.5 RELATED SECTIONS

Refer to the following technical sections for additional commissioning requirements for respective systems:

Section 25 05 11 Cybersecurity for Facility-Related Control Systems

Section 23 08 00 COMMISSIONING OF MECHANICAL AND PLUMBING SYSTEMS

1.6 COMMISSIONING TEAM

The Commissioning team will include, but is not limited to the following team members.

Ensure all Construction Activities for systems to be commissioned are coordinated with the appropriate commissioning team members.

a. Lead Commissioning Specialist (CxC)

b. QC Manager

c. Sub-Contractor Representatives for each trade responsible for construction/installation of systems to be commissioned

d. Contractor's Project Manager

e. Technical Commissioning Specialists for each system to be commissioned

f. TAB Representative

g. Equipment manufacturer representatives

h. Government Contracting Officer

i. Government Representatives

j. Installation Maintenance Representative

k. Facility End User

m. Government Acceptance Testing Representatives

n. Commissioning Coordintor

m. Cybersecurity Representative

1.7 PROJECT SCHEDULE

Include the following tasks in the project schedule required by Section 01 32 01.00 06 PROJECT SCHEDULE in the construction phase commissioning plan. Ensure sufficient time is scheduled to complete each item. The order of items listed below is not intended to imply a specified sequence:

a. Submission and approval of the Commissioning Firm Qualifications

b. Submission and approval of the Design Phase Commissioning Plan

c. Submission and approval of the Design Review Report

d. Submission and approval of the Interim and Final Construction Phase Commissioning Plans

e. Commissioning Kickoff Meeting

f. Regular Commissioning Coordination Meetings

g. Installation of permanent utilities (gas, water, electric, steam)

h. Building Enclosure Construction

i. Submission and approval of the Completed Building Enclosure Inspection Checklists

j. Manufacturer's Equipment Start-Up for each of the systems to be commissioned

k. Submission and approval of the Completed Commissioning Observation Checklists

l. Submission and approval of Certificate of Readiness for each system to be commissioned

m. Commissioning Testing, including Functional Performance Testing, for each system to be commissioned

o. Post-test deficiency correction for each system to be commissioned

p. Re-Testing

q. Submission and approval of the Maintenance and Service Life Plans

r. Submission and approval of the Systems Manual

s. Training for each of the systems to be commissioned

t. Submission and approval of the Final Commissioning Reports

v.

1.7.1 Final Commissioning Report Submittal Withholdings

See Section 01 32 01.00 06, PROJECT SCHEDULE, para "Basis for Payment and Cost Loading". This amount shall be withheld and not paid until the final Commissioning report submittal has been accepted by the Government.

Withholding for the final commissioning report submittal shall be in the amount of: 1% for contract awards less than $5,000,000; $50,000 for contracts awarded from $5,000,000 to $10,000,000; or $100,000 for contracts awarded greater than $10,000,000. Withholding shall be withheld. until the final commissioning report submittal has been approved and accepted by the Government.

1.8 PHASING

This project includes multiple phases. Commissioning activities for each project phase must be scheduled separately and must correspond to each completion milestone in the master schedule.

1.9 SUBMITTALS

Government approval is required for submittals with a "G" or "S" classification. Submittals not having a "G" or "S" classification are for information only. When used, a code following the "G" classification identifies the office that will review the submittal for the Government. Submit the following in accordance with Section 01 33 00 SUBMITTAL PROCEDURES:

SD-06 Test Reports

Completed Construction Observation Checklists; G,

Design Review Report; G,

Interim Construction Phase Commissioning Plan; G,

Final Construction Phase Commissioning Plan; G, ; S

Issues Log; G,

SD-07 Certificates

Commissioning Firm; G,

Certificate of Readiness; G,

SD-10 Operation and Maintenance Data

Maintenance and Service Life Plan; G,

Systems Manual; G,

SD-11 Closeout Submittals

Final Commissioning Report; G,

Updated Final Commissioning Report; G,

1.10 COMMISSIONING FIRM

Employ the services of a Commissioning Firm and all Commissioning Specialists required to perform work for this project. The Commissioning Firm must be a first-tier subcontractor that is financially and corporately independent from prime contractor and all other subcontractors and the Designer of Record and that is not participating in any other work on this Contract, including design, furnishing equipment, construction, or testing, adjusting, and balancing.

a. Submit the Commissioning Firm's and Commissioning Specialists' qualifications, including the name of the firm and each CxC and each certification, no later than 30 calendar days after notice to proceed.

b. If, for any reason, a specialist loses a certification during this period, immediately notify the Contracting Officer and submit another Commissioning Specialist for approval. An approved successor must validate all work performed for this project by the CxC who lost a certification.

1.10.1 Commissioning Specialists (CxC)

Assign Lead Commissioning Specialist and other appropriate Commissioning Specialists for the systems to be commissioned.

1.10.1.1 Lead Commissioning Specialist (CxC)

Lead Commissioning Specialist (CxC) coordinates all aspects of the commissioning process. Duties include leading and overseeing the commissioning work and acting as the primary point of contact for the commissioning work. CxC may serve as a systems Specialist if all requirements for both designations are met. CxC must have a minimum of five years of commissioning experience, including two projects of similar size and complexity to this project.

CxC must be certified in one of the following:

NEBB Building System Commissioning Professional (CxCP)

ACG Certified Commissioning Authority (CxA)

ICB/TABB Certified Commissioning Supervisor

BCA Certified Commissioning Professional (CCP)

AEE Certified Building Commissioning Professional (CBCP)

University of Wisconsin-Madison Qualified Commissioning Process Provider (QCxP)

ASHRAE Building Commissioning Professional (BCxP).

1.10.1.2 Commissioning Specialists

Refer to the related technical commissioning specification section for

additional qualifications for each Commissioning Specialist associated with each system. Include all Commissioning Specialist qualifications with the Commissioning Firm submittal:

1.11 COMMISSIONING STANDARD

Comply with ASHRAE 202 and the commissioning standards under which the Commissioning Firm and Specialists qualifications are approved, which may include ACG Commissioning Guideline, NEBB S1110, or ANSI/SMACNA 014. In a conflict, the most stringent requirements apply. In addition, comply with ASHRAE 90.1 - IP commissioning requirements for all systems. Refer to related technical commissioning specification sections for additional standards requirements. Comply with applicable International Electrical Testing Association (NETA) testing standards for electrical systems. The following requirements apply to all project commissioning and test standards:

a. Implement all recommendations and suggested practices contained in the Commissioning Standard and test standards.

b. Use the Commissioning Standard for all aspects of Commissioning, including calibration of instruments.

c. Where the instrument manufacturer calibration recommendations are more stringent than those listed in the Commissioning Standard, adhere to the manufacturer calibration recommendations.

d. All quality assurance provisions of the Commissioning Standard such as performance guarantees are part of this contract.

e. The Commissioning Specialists must develop commissioning procedures for any systems or system components not covered in the Commissioning Standard.

f. Use any new requirements, recommendations, and procedures published or adopted by the body responsible for the applicable Commissioning Standards at the time of project award.

g. If there is a conflict between the requirements of the contract documents and the commissioning standard used, the contract documents take precedent.

1.12 SUSTAINABILITY THIRD PARTY CERTIFICATION (TPC)

The Commissioning Specialist must perform all commissioning activities, coordination, and submittals required by the sustainability Third Party Certification (TPC) program applied to this project, in accordance with Section 01 33 29 SUSTAINABILITY REQUIREMENTS AND REPORTING.

CxC must provide documentation or perform commissioning activities, coordination and submittals as required by Leadership in Energy and Environmental Design (LEED) Fundamental Commissioning and Verification.

1.13 ISSUES LOG

The Commissioning Specialist develops and maintains an Issues Log for the systems to be commissioned. The issues log documents and tracks resolution of deficiencies identified during submittal reviews, inspection, and testing. At any point during construction, any

commissioning team member finding deficiencies may communicate those deficiencies in writing to the Commissioning Specialist for inclusion into the Issues Log. For each issue, the Issues Log includes, but is not limited to, a unique reference number, description of the issue with contract requirement referenced, location of or equipment name/tags exhibiting the issue, the initials of the individual's name whom reported the issue, the date of first observation, the proposed resolution of the issue and date proposed, the date of any subsequent observations with applicable additional information, and the date of implementation of the final resolution of the issue as confirmed by the Commissioning Specialist and Contracting Officer. Issues must not be deleted from the issues log.

CxC must submit the Issues Log monthly and within three working days from changes to the Issue Log. The CxC is responsible for distributing the Issues Log to the Commissioning Team. QC Manager must track construction deficiencies identified in the Issues Log using a quality management system in accordance with Section.

1.14 CERTIFICATE OF READINESS

Prior to scheduling Commissioning Tests for each system, the Quality Control Manager must issue a Certificate of Readiness for each system, certifying that inspections have been completed, open issues have been resolved, and the system is ready for Commissioning Tests. Refer to each related technical commissioning specification section for additional requirements.

Submit the Certificate of Readiness for each system 30 calendar days prior to Commissioning Tests of that system. Do not schedule Commissioning Tests for a system until the Certificate of Readiness is approved by the Government.

PART 2 PRODUCTS

Not used.

PART 3 EXECUTION

3.1 CONSTRUCTION SUBMITTAL REVIEWS

Coordinate construction submittal document reviews for commissioned systems and assemblies with the CxC. The commissioning submittal review does not replace the Government submittal review, in accordance with Section 01 33 00 SUBMITTAL PROCEDURES.

The CxC must identify construction submittals to be provided by the contractor for the commissioned systems. The CxC must evaluate construction submittals for compliance with the contract documents and Owner's Project Requirements Document prior to submission to the Government . Include a copy of CxC comments with the construction submittals. Include a copy of the submittal document review transmittal and response in the Commissioning Report.

3.2 COMMISSIONING KICKOFF MEETING

Conduct a Commissioning Kickoff Meeting, led by the CxC, after approval of the Commissioning Firm and Commissioning Specialists, and no later than 30 days following approval of the Commissioning Firm and Specialists. Discuss The CxC is responsible for conducting a Commissioning Kickoff

Meeting no later than 60 days following construction notice to proceed to discuss the commissioning process including contract requirements, lines of communication, roles and responsibilities, schedules, documentation requirements, inspection and test procedures, and logistics as specified in this section.

The Construction Manager, Contractor's Project Manager, Quality Control team, Designer of Record, Commissioning agent discretion, and the Government Acceptance Testing Representatives and other Government team members must attend this meeting, Sub-Contractor Representatives for each trade responsible for construction/installation of systems to be commissioned must attend this meeting as requested by the CxC/CxA. Invite the User and Base Civil Engineering Representative to attend this meeting.

3.3 REGULAR COMMISSIONING COORDINATION MEETINGS

The Quality Control team, Designer of Record, and the Government must attend this meeting. Sub-Contractor Representatives for each trade responsible for construction/installation of systems to be commissioned must attend this meeting as requested by the CxC. Invite the User andto attend this meeting.

CxC must conduct monthly commissioning coordination meetings when installation of commissioned systems begins. Provide status of commissioned systems, open issues log items, outstanding submittals, and upcoming commissioning activities. Conduct bi-weekly commissioning coordination meetings within 30 days of the scheduled date for commissioning testing.

3.4 CONTROLS SYSTEM MEETING

The Lead Commissioning Specialists must lead a Controls Systems Meeting to discuss the intended operation of the commissioned systems, controls sequences of operation, and (if applicable) integration with the existing building control automation system no later than 30 calendar days prior to submission of the DDC Contractor Design Drawings specified in Section 23 09 00 INSTRUMENTATION AN CONTROL FOR HVAC. The meeting will also include discussion of how packaged equipment will meet the controls requirements of the contract. Representatives of the controls contractor and manufacturer of equipment with packaged controls must attend this meeting. In addition, the Contractor's Quality Control Representative, the Designer of Record, and a Contracting Officer's Representative must attend this meeting. Invite a Representative of the Base and/or Owner to attend.

3.5 CONSTRUCTION PHASE COMMISSIONING PLANS

The Interim Construction Phase Commissioning Plan identifies the commissioning and testing standards and outline the overall commissioning process, the commissioning schedule, the commissioning team members and responsibilities, lines of communication, documentation requirements for the construction phase of the project. Submit the Interim Construction Phase Commissioning Plan, prepared by the CxC, 14 calendar days after the Construction Commissioning Coordination Meeting and 14 days prior to the start of construction of the building enclosure. Include the following items in the commissioning schedule in addition to the items in paragraph PROJECT SCHEDULE: Commissioning Site Visits, Seasonal Testing, Warranty Phase Site Visit, Post-Construction Endurance Testing, and Updated Commissioning Report.

The Final Construction Phase Commissioning Plan includes the information provided in the Interim Construction Phase Commissioning Plan as well as commissioning construction observation checklists and test procedures such as Pre-Functional Checklists and Functional Performance Test Checklists and other Commissioning Test Checklists for each building, for each system required to be commissioned, and for each component for inclusion in the Final Construction Phase Commissioning Plan. Refer to the related technical commissioning specification section for additional requirements for checklists. Submit the Final Construction Phase Commissioning Plan, prepared by the CxC, no later than 90 calendar days prior to the start of Commissioning Inspections. Once approved, file the approved plan in the Sustainability eNotebook.

3.5.1 Construction Observation Checklists

Construction Observation Checklists must include items for physical inspection or testing that demonstrate that installation and start-up of equipment and systems is complete. Refer to paragraph COMMISSIONING INSPECTIONS. Construction observation checklists must be tailored to verify the specific installation requirements and details of the construction documents and manufacturer's instructions.

3.5.2 Test Procedures and Checklists

Test procedures and checklists must include procedures that explain, step-by-step, the actions and expected results that will demonstrate that the systems perform in accordance with the contract. Refer to paragraph COMMISSIONING TESTS. Include the following sections and details appropriate to the systems being tested in the test procedures and checklists:

a. Notable system features including information about controls to facilitate understanding of system operation

b. Conclusions and recommendations. Conclusions must clearly indicate if system does or does not perform in accordance with contract requirements. Recommendation must clearly indicate that the system should or should not be approved by the Government.

c. Test conditions including date, beginning and ending time, and beginning and ending outdoor air conditions

d. Attendees

e. Identification of the equipment involved in the test

f. Control system feature identification

g. As-found condition of the system operation

h. List of test items with step numbers along with the corresponding feature or operation, intended test procedure, expected system response, and pass/fail indication.

i. Space for comments for each test item.

3.6 COMMISSIONING SITE VISITS

The CxC must visit the construction site no less than once every 90 days

during construction of the commissioned systems to verify that construction is achieving the requirements of the contract documents and the Owner's Project Requirements Document. The frequency of the site visits must increase to bi-weekly within60 days of the scheduled commissioning tests. The CxC must vist the construction site more frequently, as needed, to complete commissioning inspections. Document deficiencies or issues in the Issues Log.

3.7 COMMISSIONING INSPECTIONS

Complete inspections using Construction Observation Checklists for each individual item of equipment or system for each system required to be commissioned in accordance with the commissioning plan. Indicate commissioning team member inspection and validation of each checklist item by initials. Validation of each checklist item by each team member indicates that item conforms to the contract documents and design in their area of responsibility. Commissioning Specialist validation of each checklist item indicates that each item has been installed correctly and in accordance with contract documents and the Owner's Project Requirements (OPR). Submit the initialed and Completed Construction Observation Checklists no later than 7 calendar days after completion of inspection of all checklists items for each system.

3.8 COMMISSIONING TESTS

Demonstrate to the Government's designated representative that all systems, equipment, and components have been installed correctly and that the systems operate and perform, including interactive operation between systems, in accordance with contract documents and the Owner's Project Requirements Document. Perform tests as specified in related technical commissioning specifications. Provide all materials, services, and labor required to perform all commissioning tests.

Commissioning Specialist's duties include leading and documenting all tests for the systems to be commissioned with appropriate sub-contractors performing the Tests. The representatives listed in the paragraph COMMISSIONING TEAM must attend the tests with the exception of the Contractor's Project Manager.

3.8.1 Test Scheduling and Coordination

Schedule Commissioning Tests for each system only after the Certificate of Readiness has been approved by the Government for the system. Correct all deficiencies identified through any prior review, inspection, or test activity before the start of Commissioning tests.

Commissioning Tests must be performed with the CxC present. Government reserves the right to witness all tests. Coordinate test schedule with Government representatives.

3.8.2 Testing Procedures

Commissioning tests include tests such as functional performance and integrated systems tests. Perform test procedures in accordance with the commissioning standards specified. In addition, comply with the testing procedures specified in the sections listed in paragraph RELATED SECTIONS.

3.8.3 Sample Strategy

Refer to the sections identified in paragraph RELATED SECTIONS for sample strategy.

For electrical systems, test 100 percent of all equipment and systems except for the following. Test at the sample rate shown:

a. Lighting Controls 100

b.

c.

3.8.4 Aborted Tests and Re-Testing

Abort any test if any deficiency prevents successful completion of the test or if any required commissioning team member is not present for the test. Re-test after all deficiencies identified during the original test have been corrected. Contracting Officer may withhold payment equivalent to lost time, re-testing, and aborted tests. These costs may include salary, travel costs, and per diem for Government team members.

3.9 TRAINING PLAN

CxC must review the training plan for training associated with the equipment and systems to be commissioned, checking that each plan has the trainer name, trainer contract information, training schedule and location. Submit review at least 30 days prior to the first training event. Incorporate CxC review comments prior to submitting training plan in accordance with Section 01 78 23 OPERATION AND MAINTENANCE DATA. Update and resubmit the training plan based on any corrective action taken.

3.10 SYSTEMS MANUAL

Prepare and submit a Systems Manual, including a signed certification or letter from the Commissioning Specialists and the CxC stating that the Systems Manual is complete, clear, and accurate. The Systems Manual, for all commissioned systems, must conform to Appendix A SYSTEMS MANUAL ORGANIZATION AND CONTENT per ER 25-345-1, available at the USACE Publications website at the following location: https://www.publications.usace.army.mil/USACE-Publications/Engineer-Regulations/. Obtain the Basis of Design for incorporation into the Systems Manual from the Contracting Officer. Submit Systems Manual no later than 30 calendar days following completion of Functional Performance Tests. Update and resubmit the Systems Manual based on any corrective action taken during the warranty period.

Ensure Systems Manual is coordinated with the requirements of Section 01 78 23 OPERATION AND MAINTENANCE DATA and Quality Control requirements.

3.11 MAINTENANCE AND SERVICE LIFE PLAN

3.11.1 Maintenance Plan

Prepare and submit a Maintenance Plan for the project mechanical, electrical, plumbing, and fire protection systems. Prepare the HVAC and refrigeration sections of the Maintenance Plan in accordance with

ASHRAE 180. Develop required inspection and maintenance tasks similar to Section 5 of ASHRAE 180 for the other commissioned systems and fire protection systems. Ensure Maintenance Plan is coordinated with the requirements of Section 01 78 23 OPERATION AND MAINTENANCE DATA.

Submit the Maintenance Plan no later than 30 calendar days following the completion of Functional Performance Tests.

3.11.2 Service Life Plan

Prepare and submit a Service Life Plan for the building enclosure, structural systems, and site hardscape that includes the following for each assembly or component:

a. A description of each including the materials or products.

b. The estimated service life, in years.

c. The estimated maintenance frequency and description of maintenance tasks.

d. The point of maintenance access for the components with estimated service life less than service life of the building.

Ensure Service Life Plan is coordinated with the requirements of Section 01 78 23 OPERATION AND MAINTENANCE DATA. Submit the Service Life Plan no later than 30 calendar days following the completion of Functional Performance Tests.

3.12 COMMISSIONING REPORT

Submit an Final Commissioning Report no later than 14 calendar days following commissioning team validation of all Commissioning Tests, including Functional Performance Tests,, with the exception of Seasonal Tests.

a. An executive summary describing the overall commissioning process, the results of the commissioning process, outstanding deficiencies and recommended resolutions, and seasonal testing that must be scheduled for a later date. Indicate, in the executive summary, whether the systems meet the requirements of the contract documents and the Owner's Project Requirements Document.

b. A list of deficiencies discovered during the commissioning process and the corrective actions taken in the report.

c. Completed Pre-Functional Checklists and other Commissioning Observation Checklists, Commissioning Test Checklists such as Functional Performance Test Checklists, the Air Leakage Test Reports and Diagnostic Test Reports, the Final Construction Phase Commissioning Plan, the Issues Log, Training Attendance Rosters, the Design Review Reports, Submittal Review Report, and any other documents as specified by related technical commissioning specification sections.

P2# 519087 - DSSC DLA Repair Building 27
Columbus, OH

-- End of Section --

P2# 519087 - DSSC DLA Repair Building 27
Columbus, OH

SECTION 02 41 00

DEMOLITION AND DECONSTRUCTION
08/22

PART 1 GENERAL

1.1 REFERENCES

The publications listed below form a part of this specification to the extent referenced. The publications are referred to within the text by the basic designation only.

AIR-CONDITIONING, HEATING AND REFRIGERATION INSTITUTE (AHRI)

AHRI Guideline K	(2009) Guideline for Containers for Recovered Non-Flammable Fluorocarbon Refrigerants

AMERICAN SOCIETY OF SAFETY PROFESSIONALS (ASSP)

ASSP A10.6	(2006) Safety & Health Program Requirements for Demolition Operations - American National Standard for Construction and Demolition Operations

U.S. ARMY CORPS OF ENGINEERS (USACE)

EM 385-1-1	(2024) Safety -- Safety and Occupational Health (SOH) Requirements

U.S. DEFENSE LOGISTICS AGENCY (DLA)

DLA 4145.25	(Jun 2000; Reaffirmed Oct 2010) Storage and Handling of Liquefied and Gaseous Compressed Gases and Their Full and Empty Cylinders; https://www.dla.mil/Portals/104/Documents/DispositionS /ddsr/docs/cylinderjointpub.pdf

U.S. DEPARTMENT OF DEFENSE (DOD)

DOD 4000.25-1-M	(2006) MILSTRIP - Military Standard Requisitioning and Issue Procedures
MIL-STD-129	(2014; Rev R; Change 1 2018; Change 2 2019; Change 3 2023) Military Marking for Shipment and Storage

U.S. NATIONAL ARCHIVES AND RECORDS ADMINISTRATION (NARA)

40 CFR 61	National Emission Standards for Hazardous Air Pollutants
40 CFR 82	Protection of Stratospheric Ozone
49 CFR 173.301	Shipment of Compressed Gases in Cylinders and Spherical Pressure Vessels

1.2 PROJECT DESCRIPTION

1.2.1 Definitions

1.2.1.1 Demolition

Demolition is the process of tearing apart and removing any feature of a facility together with any related handling and disposal operations.

1.2.1.2 Deconstruction

Deconstruction is the process of taking apart a facility with the primary goal of preserving the value of all useful building materials.

1.2.1.3 Demolition Plan

Demolition Plan is the planned steps and processes for managing demolition activities and identifying the required sequencing activities and disposal mechanisms.

1.2.1.4 Deconstruction Plan

Deconstruction Plan is the planned steps and processes for dismantling all or portions of a structure or assembly, to include managing sequencing activities, storage, re-installation activities, salvage and disposal mechanisms.

1.2.2 Demolition/Deconstruction Plan

Prepare a Demolition Plan and Deconstruction Plan and submit proposed salvage, demolition and deconstruction and removal procedures for approval before work is started. Include in the plan procedures for careful removal and disposition of materials specified to be salvaged, coordination with other work in progress, a disconnection schedule of utility services, a detailed description of methods and equipment to be used for each operation and of the sequence of operations. Coordinate with Waste Management Plan in accordance with Section 01 74 19 CONSTRUCTION WASTE MANAGEMENT AND DISPOSAL. Provide procedures for safe conduct of the work in accordance with EM 385-1-1. Plan must be approved by Contracting Officer prior to work beginning.

1.2.3 General Requirements

Do not begin demolition or deconstruction until authorization is received from the Contracting Officer. Remove rubbish and debris from the project site; do not allow accumulations inside or outside the building. The work includes demolition and deconstruction, salvage of identified items and materials, and removal of resulting rubbish and debris. Remove rubbish and debris from Government property daily, unless otherwise directed. Store materials that cannot be removed daily in areas specified by the Contracting Officer. In the interest of occupational safety and health, perform the work in accordance with EM 385-1-1, Section 17, Demolition, and other applicable Sections.

1.3 ITEMS TO REMAIN IN PLACE

Comply with FAR 52.236-9 to protect existing vegetation, structures, equipment, utilities, and improvements. Coordinate the work of this

section with all other work indicated. Construct and maintain shoring, bracing, and supports as required. Ensure that structural elements are not overloaded. Increase structural supports or add new supports as may be required as a result of any cutting, removal, deconstruction, or demolition work performed under this contract. Do not overload structural elements and pavements to remain. Provide new supports and reinforcement for existing construction weakened by demolition, deconstruction, or removal work. Repairs, reinforcement, or structural replacement require approval by the Contracting Officer prior to performing such work.

1.3.1 Existing Construction Limits and Protection

Do not disturb existing construction beyond the extent indicated or necessary for installation of new construction. Provide temporary shoring and bracing for support of building components to prevent settlement or other movement. Provide protective measures to control accumulation and migration of dust and dirt in all work areas. Remove dust, dirt, and debris from work areas daily.

1.3.2 Weather Protection

For portions of the building to remain, protect building interior and materials and equipment from the weather at all times. Where removal of existing roofing is necessary to accomplish work, have materials and workmen ready to provide adequate and temporary covering of exposed areas.

1.3.3 Utility Service

Maintain existing utilities indicated to stay in service and protect against damage during demolition and deconstruction operations. Prior to start of work, utilities serving each area of alteration or removal will be shut off by the Government and disconnected and sealed by the Contractor .

1.3.4 Facilities

Protect electrical and mechanical services and utilities. Where removal of existing utilities and pavement is specified or indicated, provide approved barricades, temporary covering of exposed areas, and temporary services or connections for electrical and mechanical utilities. Floors, roofs, walls, columns, pilasters, and other structural components that are designed and constructed to stand without lateral support or shoring, and are determined to be in stable condition, must remain standing without additional bracing, shoring, or lateral support until demolished or deconstructed, unless directed otherwise by the Contracting Officer. Ensure that no elements determined to be unstable are left unsupported and place and secure bracing, shoring, or lateral supports as may be required as a result of any cutting, removal, deconstruction, or demolition work performed under this contract.

1.4 BURNING

The use of burning at the project site for the disposal of refuse and debris will not be permitted.

1.5 AVAILABILITY OF WORK AREAS

Areas in which the work is to be accomplished will be available at contract award.

1.6 SUBMITTALS

Government approval is required for submittals with a "G" or "S" classification. Submittals not having a "G" or "S" classification are for information only. When used, a code following the "G" classification identifies the office that will review the submittal for the Government. Submit the following in accordance with Section 01 33 00 SUBMITTAL PROCEDURES:

SD-01 Preconstruction Submittals

Demolition Plan; G

Deconstruction Plan; G

Existing Conditions

SD-07 Certificates

Notification; G

SD-11 Closeout Submittals

Receipts

1.7 QUALITY ASSURANCE

Submit timely notification of demolition, deconstruction and renovation projects to Federal, State, regional, and local authorities in accordance with 40 CFR 61, Subpart M. Notify the local air pollution control district/agency and the Contracting Officer in writing 10 working days prior to the commencement of work in accordance with 40 CFR 61, Subpart M. Comply with federal, state, and local hauling and disposal regulations. In addition to the requirements of the "Contract Clauses," conform to the safety requirements contained in ASSP A10.6. Comply with the Environmental Protection Agency requirements specified. Use of explosives will not be permitted.

1.7.1 Dust and Debris Control

Prevent the spread of dust and debris to occupied portions of the building and avoid the creation of a nuisance or hazard in the surrounding area. Do not use water if it results in hazardous or objectionable conditions such as, but not limited to, ice, flooding, or pollution. Vacuum and dust the work area daily.

1.8 PROTECTION

1.8.1 Traffic Control Signs

a. Where pedestrian and driver safety is endangered in the area of removal work, use traffic barricades with flashing lights. Anchor barricades in a manner to prevent displacement by wind. Notify the Contracting Officer prior to beginning such work.

1.8.2 Protection of Personnel

Before, during and after the demolition and deconstruction work continuously evaluate the condition of the site specific features structure being demolished and deconstructed and take immediate action to protect all personnel working in and around the project site. No area, section, or component of floors, roofs, walls, columns, pilasters, or other structural element will be allowed to be left standing without sufficient bracing, shoring, or lateral support to prevent collapse or failure while workmen remove debris or perform other work in the immediate area.

1.9 RELOCATIONS

Perform the removal and reinstallation of relocated items as indicated with workmen skilled in the trades involved. Repair or replace items to be relocated which are damaged by the Contractor with new undamaged items as approved by the Contracting Officer.

1.10 EXISTING CONDITIONS

Before beginning any demolition or deconstruction work, survey the site and examine the drawings and specifications to determine the extent of the work. Record existing conditions in the presence of the Contracting Officer or the Contracting Officer's Representative showing the condition of structures and other facilities adjacent to areas of alteration or removal. Photographs or electronic images with a minimum resolution of 3072 x 2304 pixels, capable of a print resolution of 300 dpi, will be acceptable as a record of existing conditions. Include in the record the elevation of the top of foundation walls, finish floor elevations, possible conflicting electrical conduits, plumbing lines, alarms systems, the location and extent of existing cracks and other damage and description of surface conditions that exist prior to starting work. It is the Contractor's responsibility to verify and document all required outages which will be required during the course of work, and to note these outages on the record document. Submit survey results to the Contracting Officer or the Contracting Officer's Representative.

PART 2 PRODUCTS

2.1 FILL MATERIAL

a. Comply with excavating, backfilling, and compacting procedures for soils used as backfill material to fill basements, voids, depressions or excavations resulting from demolition or deconstruction of structures.

PART 3 EXECUTION

3.1 EXISTING FACILITIES TO BE REMOVED

Inspect and evaluate existing structures onsite for reuse. Disassemble existing construction scheduled to be removed for reuse. Dismantled and removed materials are to be separated, set aside, and prepared as specified, and stored or delivered to a collection point for reuse, remanufacture, recycling, or other disposal, as specified. Designate materials for reuse onsite whenever possible.

3.1.1 Structures

a. Remove existing structures indicated to be removed to as indicated in the drawings. Remove interior walls, other than retaining walls and partitions, to 0 feet below grade or to top of concrete slab on ground.

b. Demolish and Deconstruct structures in a systematic manner from the top of the structure to the ground. Complete demolition work above each tier or floor before the supporting members on the lower level are disturbed. Demolish concrete and masonry walls in small sections. Remove structural framing members and lower to ground by means of derricks, platforms hoists, or other suitable methods as approved by the Contracting Officer.

c. Locate demolition and deconstruction equipment throughout the structure and remove materials so as to not impose excessive loads to supporting walls, floors, or framing.

3.1.2 Utilities and Related Equipment

3.1.2.1 General Requirements

Do not interrupt existing utilities serving occupied or used facilities, except when authorized in writing by the Contracting Officer. Do not interrupt existing utilities serving facilities occupied and used by the Government except when approved in writing and then only after temporary utility services have been approved and provided. Do not begin demolition or deconstruction work until all utility disconnections have been made. Shut off and cap utilities for future use, as indicated.

3.1.3 Masonry

Sawcut and remove masonry so as to prevent damage to surfaces to remain and to facilitate the installation of new work. Where new masonry adjoins existing, abut or tie the new work into the existing construction as indicated and specified for the new work. Provide square, straight edges and corners where existing masonry adjoins new work and other locations. Salvage masonry removed in whole blocks and store for reuse.

3.1.4 Concrete

Saw concrete along straight lines to a depth of a minimum 2 inch. Make each cut in walls perpendicular to the face and in alignment with the cut in the opposite face. Break out the remainder of the concrete provided that the broken area is concealed in the finished work, and the remaining concrete is sound. At locations where the broken face cannot be concealed, grind smooth or saw cut entirely through the concrete. Sawcuts in existing concrete sidewalk concrete pads parking areas must be at the nearest existing expansion joint or weakened plane joint and at full depth.

3.1.5 Miscellaneous Metal

Salvage shop-fabricated items such as access doors and frames, steel gratings, metal ladders, wire mesh partitions, metal railings, metal windows and similar items as whole units. Salvage light-gage and cold-formed metal framing, such as steel studs, steel trusses, metal gutters, roofing and siding, metal toilet partitions, toilet accessories and similar items. Scrap metal is the Contractor's property. Recycle scrap metal as part of demolition and deconstruction operations. Provide separate containers to collect scrap metal and transport to a scrap metal

collection or recycling facility, in accordance with the Waste Management Plan.

3.1.6 Carpentry

Salvage for recycle lumber, millwork items, and finished boards, and sort by type and size. Chip or shred and recycle salvaged wood unfit for reuse, except stained, painted, or treated wood. Remove windows, doors, frames, and cabinets, and similar items as whole units, complete with trim and accessories. Do not remove hardware attached to units, except for door closers. Brace the open end of door frames to prevent damage.

3.1.7 Acoustic Ceiling Tile

Remove, neatly stack, and recycle acoustic ceiling tiles. Recycling may be available with manufacturer. Otherwise, give priority to a local recycling organization. Recycling is not required if the tiles contain or may have been exposed to asbestos material.

3.1.8 Patching

Where removals leave holes and damaged surfaces exposed in the finished work, patch and repair these holes and damaged surfaces to match adjacent finished surfaces, using on-site materials when available. Where new work is to be applied to existing surfaces, perform removals and patching in a manner to produce surfaces suitable for receiving new work. Make finished surfaces of patched area flush with the adjacent existing surface and match the existing adjacent surface as closely as possible to texture and finish. Provide patching as specified and indicated, and include the following:

a. Concrete and Masonry: Completely fill holes and depressions, caused by previous physical damage or left as a result of removals in existing masonry walls to remain, with an approved masonry patching material, applied in accordance with the manufacturer's printed instructions.

b. Where existing partitions have been removed leaving damaged or missing resilient tile flooring, patch to match the existing floor tile.

c. Patch acoustic lay-in ceiling where partitions have been removed. Make the transition between the different ceiling heights by continuing the higher ceiling level over to the first runner on the lower ceiling and closing the vertical opening with a painted sheet metal strip.

3.1.9 Air Conditioning Equipment

Remove air conditioning, refrigeration, and other equipment containing refrigerants without releasing chlorofluorocarbon refrigerants to the atmosphere in accordance with the Clean Air Act Amendment of 1990. Recover all refrigerants prior to removing air conditioning, refrigeration, and other equipment containing refrigerants and dispose of in accordance with the paragraph entitled "Disposal of Ozone Depleting Substance (ODS)." Turn in salvaged Class I ODS refrigerants as specified in paragraph, "Salvaged Materials and Equipment."

3.1.10 Cylinders and Canisters

Remove all fire suppression system cylinders and canisters and dispose of in accordance with the paragraph entitled "Disposal of Ozone Depleting

Substance (ODS)."

3.1.11 Locksets on Swinging Doors

Remove all locksets from all swinging doors indicated to be removed and disposed of. Deliver the locksets and related items to a designated location for receipt by the Contracting Officer after removal.

3.1.12 Mechanical Equipment and Fixtures

Disconnect mechanical hardware at the nearest connection to existing services to remain, unless otherwise noted. Disconnect mechanical equipment and fixtures at fittings. Remove service valves attached to the unit. Salvage each item of equipment and fixtures as a whole unit; listed, indexed, tagged, and stored. Salvage each unit with its normal operating auxiliary equipment. Transport salvaged equipment and fixtures, including motors and machines, to a designated on station storage area as directed by the Contracting Officer. Do not remove equipment until approved. Do not offer low-efficiency equipment for reuse; provide to recycling service for disassembly and recycling of parts.

3.1.12.1 Preparation for Storage

Remove water, dirt, dust, and foreign matter from units; drain tanks, piping and fixtures; if previously used to store flammable, explosive, or other dangerous liquids, steam clean interiors. Seal openings with caps, plates, or plugs. Secure motors attached by flexible connections to the unit. Change lubricating systems with the proper oil or grease.

3.1.12.2 Piping

Disconnect piping at unions, flanges and valves, and fittings as required to reduce the pipe into straight lengths for practical storage. Store salvaged piping according to size and type. If the piping that remains can become pressurized due to upstream valve failure, attach end caps, blind flanges, or other types of plugs or fittings with a pressure gage and bleed valve to the open end of the pipe to ensure positive leak control. Carefully dismantle piping that previously contained gas, gasoline, oil, or other dangerous fluids, with precautions taken to prevent injury to persons and property. Store piping outdoors until all fumes and residues are removed. Box prefabricated supports, hangers, plates, valves, and specialty items according to size and type. Wrap sprinkler heads individually in plastic bags before boxing. Classify piping not designated for salvage, or not reusable, as scrap metal.

3.1.12.3 Ducts

Classify removed duct work as scrap metal.

3.1.12.4 Fixtures, Motors and Machines

Remove and salvage fixtures, motors and machines associated with plumbing, heating, air conditioning, refrigeration, and other mechanical system installations. Salvage, box and store auxiliary units and accessories with the main motor and machines. Tag salvaged items for identification, storage, and protection from damage. Classify broken, damaged, or otherwise unserviceable units and not caused to be broken, damaged, or otherwise unserviceable as debris to be disposed of by the Contractor.

3.1.13 Electrical Equipment and Fixtures

Salvage motors, motor controllers, and operating and control equipment that are attached to the driven equipment. Salvage wiring systems and components. Box loose items and tag for identification. Disconnect primary, secondary, control, communication, and signal circuits at the point of attachment to their distribution system.

3.1.13.1 Fixtures

Remove and salvage electrical fixtures. Salvage unprotected glassware from the fixture and salvage separately. Salvage incandescent, mercury-vapor, and fluorescent lamps and fluorescent ballasts manufactured prior to 1978, boxed and tagged for identification, and protected from breakage.

3.1.13.2 Electrical Devices

Remove and salvage switches, switchgear, transformers, conductors including wire and nonmetallic sheathed and flexible armored cable, regulators, meters, instruments, plates, circuit breakers, panelboards, outlet boxes, and similar items. Box and tag these items for identification according to type and size.

3.1.13.3 Wiring Ducts or Troughs

Remove and salvage wiring ducts or troughs. Dismantle plug-in ducts and wiring troughs into unit lengths. Remove plug-in or disconnecting devices from the busway and store separately.

3.1.13.4 Conduit and Miscellaneous Items

Salvage conduit except where embedded in concrete or masonry. Consider corroded, bent, or damaged conduit as scrap metal. Sort straight and undamaged lengths of conduit according to size and type. Classify supports, knobs, tubes, cleats, and straps as debris to be removed and disposed.

3.1.14 Elevators and Hoists

Remove elevators, hoists, and similar conveying equipment and salvage as whole units, to the most practical extent. Remove and prepare items for salvage without damage to any of the various parts. Salvage and store rails for structural steel with the equipment as an integral part of the unit.

3.2 CONCURRENT EARTH-MOVING OPERATIONS

Do not begin excavation, filling, and other earth-moving operations that are sequential to demolition or deconstruction work in areas occupied by structures to be demolished or deconstructed until all demolition and deconstruction in the area has been completed and debris removed. Fill holes, open basements and other hazardous openings.

3.3 DISPOSITION OF MATERIAL

3.3.1 Title to Materials

Except for salvaged items specified in related Sections, and for materials

or equipment scheduled for salvage, all materials and equipment removed and not reused or salvaged, become the property of the Contractor and must be removed from Government property. Materials approved for storage by the Contracting Officer must be removed before completion of the contract. Title to materials resulting from demolition and deconstruction, and materials and equipment to be removed, is vested in the Contractor upon approval by the Contracting Officer. The Government will not be responsible for the condition or loss of, or damage to, such property after contract award. Showing for sale or selling materials and equipment on site is prohibited.

3.3.2 Disposal of Ozone Depleting Substance (ODS)

Class I and Class II ODS are defined in Section, 602(a) and (b), of The Clean Air Act. Prevent discharge of Class I and Class II ODS to the atmosphere. Place recovered ODS in cylinders meeting AHRI Guideline K suitable for the type ODS (filled to no more than 80 percent capacity) and provide appropriate labeling. Recovered ODS must be Turn over recovered ODS to the Contracting Officer. Dispose products, equipment and appliances containing ODS in a sealed, self-contained system (e.g. residential refrigerators and window air conditioners) in accordance with 40 CFR 82. Submit Receipts or bills of lading, as specified. Submit a shipping receipt or bill of lading for all containers of ozone depleting substance (ODS) shipped to the Defense Depot, Richmond, Virginia.

3.3.2.1 Special Instructions

No more than one type of ODS is permitted in each container. Apply a warning/hazardous label to the containers in accordance with Department of Transportation regulations. Provide a tag with the following information on all cylinders including but not limited to fire extinguishers, spheres, or canisters containing an ODS:

a. Activity name and unit identification code

b. Activity point of contact and phone number

c. Type of ODS and pounds of ODS contained

d. Date of shipment

e. National stock number (for information, call (804) 279-4525).

3.3.2.2 Fire Suppression Containers

Deactivate fire suppression system cylinders and canisters with electrical charges or initiators prior to shipment. Also, safety caps must be used to cover exposed actuation mechanisms and discharge ports on these special cylinders.

3.3.3 Transportation Guidance

Ship all ODS containers in accordance with MIL-STD-129, DLA 4145.25 (also referenced one of the following: Army Regulation 700-68, Naval Supply Instruction 4440.128C, Marine Corps Order 10330.2C, and Air Force Regulation 67-12), 49 CFR 173.301, and DOD 4000.25-1-M.

3.3.4 Unsalvageable and Non-Recyclable Material

Dispose of unsalvageable and non-recyclable combustible material off the site .

3.4 CLEANUP

Remove debris and rubbish from project site and similar excavations. Remove and transport the debris in a manner that prevents spillage on streets or adjacent areas. Apply local regulations regarding hauling and disposal.

3.5 DISPOSAL OF REMOVED MATERIALS

3.5.1 Regulation of Removed Materials

Dispose of debris, rubbish, scrap, and other nonsalvageable materials resulting from removal operations with all applicable federal, state and local regulations as contractually specified in the Waste Management Plan . Storage of removed materials on the project site is prohibited.

3.5.2 Burning on Government Property

Burning of materials removed from demolished and deconstructed structures will not be permitted on Government property.

3.5.3 Removal to Spoil Areas on Government Property

Transport noncombustible materials removed from demolition and deconstruction structures to designated spoil areas on Government property.

3.5.4 Removal from Government Property

Transport waste materials removed from demolished and deconstructed structures, except waste soil, from Government property for legal disposal. Dispose of waste soil per Section 01 57 19 TEMPORARY ENVIRONMENTAL CONTROLS.

3.6 REUSE OF SALVAGED ITEMS

Recondition salvaged materials and equipment designated for reuse before installation. Replace items damaged during removal and salvage operations or restore them as necessary to usable condition.

-- End of Section --

P2# 519087 - DSSC DLA Repair Building 27
Columbus, OH

SECTION 02 82 00

ASBESTOS REMEDIATION
11/18, CHG 1: 11/19

PART 1 GENERAL

1.1 REFERENCES

The publications listed below form a part of this specification to the extent referenced. The publications are referred to within the text by the basic designation only.

AMERICAN SOCIETY OF SAFETY PROFESSIONALS (ASSP)

ASSP Z9.2	(2018) Fundamentals Governing the Design and Operation of Local Exhaust Ventilation Systems

ASTM INTERNATIONAL (ASTM)

ASTM D4397	(2016) Standard Specification for Polyethylene Sheeting for Construction, Industrial, and Agricultural Applications
ASTM E1368	(2014) Visual Inspection of Asbestos Abatement Projects

COMPRESSED GAS ASSOCIATION (CGA)

CGA G-7	(2014) Compressed Air for Human Respiration; 6th Edition

INTERNATIONAL SAFETY EQUIPMENT ASSOCIATION (ISEA)

ANSI/ISEA Z87.1	(2020) Occupational and Educational Personal Eye and Face Protection Devices

NATIONAL FIRE PROTECTION ASSOCIATION (NFPA)

NFPA 701	(2023; ERTA 1 2023) Standard Methods of Fire Tests for Flame Propagation of Textiles and Films

NATIONAL INSTITUTE FOR OCCUPATIONAL SAFETY AND HEALTH (NIOSH)

NIOSH NMAM	(2016; 5th Ed) NIOSH Manual of Analytical Methods

U.S. ARMY CORPS OF ENGINEERS (USACE)

EM 385-1-1	(2024) Safety -- Safety and Occupational Health (SOH) Requirements

U.S. ENVIRONMENTAL PROTECTION AGENCY (EPA)

EPA 340/1-90/018	(1990) Asbestos/NESHAP Regulated Asbestos Containing Materials Guidance

EPA 560/5-85-024	(1985) Guidance for Controlling Asbestos-Containing Materials in Buildings (Purple Book)

U.S. NATIONAL ARCHIVES AND RECORDS ADMINISTRATION (NARA)

29 CFR 1910.147	The Control of Hazardous Energy (Lock Out/Tag Out)
29 CFR 1926.51	Sanitation
29 CFR 1926.59	Hazard Communication
29 CFR 1926.103	Respiratory Protection
29 CFR 1926.200	Accident Prevention Signs and Tags
29 CFR 1926.1101	Asbestos
40 CFR 61-SUBPART A	General Provisions
40 CFR 61-SUBPART M	National Emission Standard for Asbestos
40 CFR 763	Asbestos
42 CFR 84	Approval of Respiratory Protective Devices
49 CFR 107	Hazardous Materials Program Procedures
49 CFR 171	General Information, Regulations, and Definitions
49 CFR 172	Hazardous Materials Table, Special Provisions, Hazardous Materials Communications, Emergency Response Information, and Training Requirements
49 CFR 173	Shippers - General Requirements for Shipments and Packagings

U.S. NAVAL FACILITIES ENGINEERING SYSTEMS COMMAND (NAVFAC)

NAVFAC P-502	(2017) Asbestos Program Management
ND OPNAVINST 5100.23	(2005; Rev G) Navy Occupational Safety and Health (NAVOSH) Program Manual

UL SOLUTIONS (UL)

UL 586	(2009; Reprint Sep 2022) UL Standard for Safety High-Efficiency Particulate, Air Filter Units

1.2 DEFINITIONS

1.2.1 ACM

Asbestos Containing Materials.

1.2.2 Amended Water

Water containing a wetting agent or surfactant with a maximum surface tension of 0.00042 psi.

1.2.3 Area Sampling

Sampling of asbestos fiber concentrations which approximates the concentrations of asbestos in the theoretical breathing zone but is not actually collected in the breathing zone of an employee.

1.2.4 Asbestos

The term asbestos includes chrysotile, amosite, crocidolite, tremolite asbestos, anthophyllite asbestos, and actinolite asbestos and any of these minerals that has been chemically treated or altered. Materials are considered to contain asbestos if the asbestos content of the material is determined to be at least one percent.

1.2.5 Asbestos Control Area

That area where asbestos removal operations are performed which is isolated by physical boundaries which assist in the prevention of the uncontrolled release of asbestos dust, fibers, or debris.

1.2.6 Asbestos Fibers

Those fibers having an aspect ratio of at least 3:1 and longer than 5 micrometers as determined by National Institute for Occupational Safety and Health (NIOSH) Method 7400.

1.2.7 Asbestos Permissible Exposure Limit

0.1 fibers per cubic centimeter of air as an 8-hour time weighted average measured in the breathing zone as defined by 29 CFR 1926.1101 or other Federal legislation having legal jurisdiction for the protection of workers health.

1.2.8 Authorized Person

Any person authorized by the Contractor and required by work duties to be present in the regulated areas.

1.2.9 Background

The ambient airborne asbestos concentration in an uncontaminated area as measured prior to any asbestos hazard abatement efforts. Background concentrations for other (contaminated) areas are measured in similar but asbestos free locations.

1.2.10 Competent Person (CP)

A person meeting the requirements for competent person as specified in 29 CFR 1926.1101 including a person capable of identifying existing asbestos hazards in the workplace and selecting the appropriate control strategy for asbestos exposure, who has the authority to take prompt corrective measures to eliminate them, and is specifically trained in a training course which meet the criteria of EPA's Model Accreditation Plan (

40 CFR 763) for project designer or supervisor, or its equivalent. The competent person must have a current State of Ohio asbestos contractors or supervisors license.

1.2.11 Contractor

The Contractor is that individual, or entity under contract to perform the herein listed work.

1.2.12 Disposal Bag

A 6 mil thick, leak-tight plastic bag, pre-labeled in accordance with 29 CFR 1926.1101, used for transporting asbestos waste from containment to disposal site.

1.2.13 Disturbance

Activities that disrupt the matrix of ACM, crumble or pulverize ACM, or generate visible debris from ACM. Disturbance includes cutting away small amounts of ACM, no greater than the amount which can be contained in one standard sized glovebag or waste bag, not larger than 60 inches in length and width in order to access a building component.

1.2.14 Encapsulation

The abatement of an asbestos hazard through the appropriate use of chemical encapsulants.

1.2.15 Encapsulants

Specific materials in various forms used to chemically or physically entrap asbestos fibers in various configurations to prevent these fibers from becoming airborne. There are four types of encapsulants as follows which must comply with performance requirements as specified herein.

a. Removal Encapsulant (can be used as a wetting agent)

b. Bridging Encapsulant (used to provide a tough, durable surface coating to asbestos containing material)

c. Penetrating Encapsulant (used to penetrate the asbestos containing material encapsulating all asbestos fibers and preventing fiber release due to routine mechanical damage)

d. Lock-Down Encapsulant (used to seal off or "lock-down" minute asbestos fibers left on surfaces from which asbestos containing material has been removed).

1.2.16 Friable Asbestos Material

A term defined in 40 CFR 61-SUBPART M and EPA 340/1-90/018 meaning any material which contains more than 1 percent asbestos, as determined using the method specified in 40 CFR 763, Polarized Light Microscopy (PLM), that when dry, can be crumbled, pulverized, or reduced to powder by hand pressure.

1.2.17 Glovebag Technique

Those asbestos removal and control techniques put forth in 29 CFR 1926.1101.

1.2.18 Government Consultant (GC)

That qualified person employed directly by the Government to monitor, sample, inspect the work or in some other way advise the Contracting Officer. The GC is normally a private consultant, but can be an employee of the Government.

1.2.19 HEPA Filter Equipment

High efficiency particulate air (HEPA) filtered vacuum and exhaust ventilation equipment with a filter system capable of collecting and retaining asbestos fibers. Filters must retain 99.97 percent of particles 0.3 microns or larger as indicated in UL 586.

1.2.20 Model Accreditation Plan (MAP)

USEPA training accreditation requirements for persons who work with asbestos as specified in 40 CFR 763.

1.2.21 Negative Pressure Enclosure (NPE)

That engineering control technique described as a negative pressure enclosure in 29 CFR 1926.1101.

1.2.22 NESHAP

National Emission Standards for Hazardous Air Pollutants. The USEPA NESHAP regulation for asbestos is at 40 CFR 61-SUBPART M.

1.2.23 Nonfriable Asbestos Material

Material that contains asbestos in which the fibers have been immobilized by a bonding agent, coating, binder, or other material so that the asbestos is well bound and will not normally release asbestos fibers during any appropriate use, handling, storage or transportation. It is understood that asbestos fibers may be released under other conditions such as demolition, removal, or mishap.

1.2.24 Permissible Exposure Limits (PELs)

1.2.24.1 PEL-Time Weighted Average(TWA)

Concentration of asbestos not in excess of 0.1 fibers per cubic centimeter of air (f/cc) as an 8-hour time weighted average (TWA).

1.2.24.2 PEL-Excursion Limit

An airborne concentration of asbestos not in excess of 1.0 f/cc of air as averaged over a sampling period of 30 minutes.

1.2.25 Personal Sampling

Air sampling which is performed to determine asbestos fiber concentrations within the breathing zone of a specific employee, as performed in accordance with 29 CFR 1926.1101.

1.2.26 Private Qualified Person (PQP)

That qualified person hired by the Contractor to perform the herein listed tasks.

1.2.27 Qualified Person (QP)

A Registered Architect, Professional Engineer, Certified Industrial Hygienist, consultant or other qualified person who has successfully completed training and is therefore accredited under a legitimate State Model Accreditation Plan as described in 40 CFR 763 as a Building Inspector, Contractor/Supervisor Abatement Worker, and Asbestos Project Designer; and has successfully completed the National Institute of Occupational Safety and Health (NIOSH) 582 course "Sampling and Evaluating Airborne Asbestos Dust" or equivalent. The QP must be qualified to perform visual inspections as indicated in ASTM E1368.The QP must be appropriately licensed in the State of Ohio.

1.2.28 TEM

Refers to Transmission Electron Microscopy.

1.2.29 Time Weighted Average (TWA)

The TWA is an 8-hour time weighted average airborne concentration of asbestos fibers.

1.2.30 Transite

A generic name for asbestos cement wallboard and pipe.

1.2.31 Wetting Agent

A chemical added to water to reduce the water's surface tension thereby increasing the water's ability to soak into the material to which it is applied. An equivalent wetting agent must have a surface tension of at most 0.00042 psi.

1.2.32 Worker

Individual (not designated as the Competent Person or a supervisor) who performs asbestos work and has completed asbestos worker training required by 29 CFR 1926.1101, to include EPA Model Accreditation Plan (MAP) "Worker" training; accreditation, if required by the OSHA Class of work to be performed or by the state where the work is to be performed.The worker must be appropriately licensed in the State ofOhio.

1.3 REQUIREMENTS

1.3.1 Description of Work

The work covered by this section includes the handling and control of asbestos containing materials and describes some of the resultant procedures and equipment required to protect workers, the environment and occupants of the building or area, or both, from contact with airborne asbestos fibers. The work also includes the disposal of any asbestos containing materials generated by the work. More specific operational procedures must be outlined in the Asbestos Hazard Abatement Plan called for elsewhere in this specification. The asbestos work includes the

demolition and removalof Asbestos Containing Material in exterior overhead door side frame caulking (overhead doors in loading dock, 1100, and 1200, 4 doors/8 frames) and brick expansion joints (asphalt)(Breck seams on North, South and East sides of the building, 24 joints) which is governed by 40 CFR 763 and NAVFAC P-502. Under normal conditions non-friable or chemically bound materials containing asbestos would not be considered hazardous; however, this material may release airborne asbestos fibers during demolition and removal and therefore must be handled in accordance with the removal and disposal procedures as specified herein. Provide negative pressure enclosure techniques as outlined in this specification. The work area will be evacuated during the asbestos abatement work. A competent person must supervise asbestos removal work as specified herein.

1.3.1.1 Wallboard/Joint Compound (n/a)

1.3.2 Unexpected Discovery of Asbestos

Notify the Contracting Officer if any previously untested building components suspected to contain asbestos are impacted by the work.

1.3.3 Medical Requirements

Provide medical requirements including but not limited to medical surveillance and medical record keeping as listed in 29 CFR 1926.1101.

1.3.3.1 Medical Examinations

Before exposure to airborne asbestos fibers, provide workers with a comprehensive medical examination as required by 29 CFR 1926.1101 or other pertinent State or local directives. This requirement must have been satisfied within the 12 months prior to the start of work on this contract. The same medical examination must be given on an annual basis to employees engaged in an occupation involving asbestos and within 30 calendar days before or after the termination of employment in such occupation. Specifically identify x-ray films of asbestos workers to the consulting radiologist and mark medical record jackets with the word "ASBESTOS."

1.3.3.2 Medical Records

Maintain complete and accurate records of employees' medical examinations, medical records, and exposure data for a period of 30 yearsafter termination of employment and make records of the required medical examinations and exposure data available for inspection and copying to: The Assistant Secretary of Labor for Occupational Safety and Health (OSHA), or authorized representatives of them, and an employee's physician upon the request of the employee or former employee.

1.3.4 Employee Training

Submit certificates, prior to the start of work but after the main abatement submittal, signed by each employee indicating that the employee has received training in the proper handling of materials and wastes that contain asbestos in accordance with 40 CFR 763; understands the health implications and risks involved, including the illnesses possible from exposure to airborne asbestos fibers; understands the use and limits of the respiratory equipment to be used; and understands the results of

monitoring of airborne quantities of asbestos as related to health and respiratory equipment as indicated in 29 CFR 1926.1101 on an initial and annual basis. Organize certificates by individual worker, not grouped by type of certification. Post appropriate evidence of compliance with the training requirements of 40 CFR 763. Train personnel involved in the asbestos control work in accordance with United States Environmental Protection Agency (USEPA) Asbestos Hazard Emergency Response Act (AHERA) training criteria or State training criteria whichever is more stringent. Document the training by providing: dates of training, training entity, course outline, names of instructors, and qualifications of instructors upon request by the Contracting Officer. Furnish each employee with respirator training and fit testing administered by the PQP as required by 29 CFR 1926.1101 and 29 CFR 1926.103. Fully cover engineering and other hazard control techniques and procedures. Asbestos workers must have a current State of Ohio asbestos worker's license.

1.3.5 Permits, Licenses, and Notifications

Prior to the start of work, obtain necessary permits and licenses in conjunction with asbestos removal, encapsulation, hauling, and disposition, and furnish notification of such actions required by Federal, State, regional, and local authorities. Notify the State's environmental protection agencyand the Contracting Officer in writing 10working days prior to commencement of work in accordance with 40 CFR 61-SUBPART M Ohio Revised Code § 3710.07(B). Notify the Contracting Officer and other appropriate Government agencies in writing 20 working days prior to the start of asbestos work as indicated in applicable laws, ordinances, criteria, rules, and regulations. Submit copies of all Notifications to the Contracting Officer.

1.3.6 Environment, Safety and Health Compliance

In addition to detailed requirements of this specification, comply with those applicable laws, ordinances, criteria, rules, and regulations of Federal, State, regional, and local authorities regarding handling, storing, transporting, and disposing of asbestos waste materials. Comply with the applicable requirements of the current issue of EM 385-1-1, 29 CFR 1926.1101, 40 CFR 61-SUBPART A, 40 CFR 61-SUBPART M, 40 CFR 763 and ND OPNAVINST 5100.23. Submit matters of interpretation of standards to the appropriate administrative agency for resolution before starting the work. Where the requirements of this specification, applicable laws, rules, criteria, ordinances, regulations, and referenced documents vary, the most stringent requirement as defined by the Government apply. The following laws, ordinances, criteria, rules and regulations regarding removal, handling, storing, transporting and disposing of asbestos materials apply:

a. The Ohio Revised Code (ORC) Title 37, Chapter 3710

1.3.7 Respiratory Protection Program

Establish and implement a respirator program as required by 29 CFR 1926.1101, and 29 CFR 1926.103. Submit a written description of the program to the Contracting Officer. Submit a written program manual or operating procedure including methods of compliance with regulatory statutes.

1.3.7.1 Respirator Program Records

Submit records of the respirator program as required by 29 CFR 1926.103, and 29 CFR 1926.1101.

1.3.7.2 Respirator Fit Testing

The Contractor's PQP must conduct a qualitative or quantitative fit test conforming to 29 CFR 1926.103 for each worker required to wear a respirator, and any authorized visitors who enter a regulated area where respirators are required to be worn. A respirator fit test must be performed prior to initially wearing a respirator and every 12 months thereafter. If physical changes develop that will affect the fit, a new fit test must be performed. Functional fit checks must be performed each time a respirator is put on and in accordance with the manufacturer's recommendation.

1.3.7.3 Respirator Selection and Use Requirements

Provide respirators, and ensure that they are used as required by 29 CFR 1926.1101 and in accordance with CGA G-7 and the manufacturer's recommendations. Respirators must be approved by the National Institute for Occupational Safety and Health NIOSH, under the provisions of 42 CFR 84, for use in environments containing airborne asbestos fibers. For air-purifying respirators, the particulate filter must be high-efficiency particulate air (HEPA)/(N-,R-,P-100). The initial respirator selection and the decisions regarding the upgrading or downgrading of respirator type must be made by the Contractor's Designated IH based on the measured or anticipated airborne asbestos fiber concentrations to be encountered.

1.3.8 Asbestos Hazard Control Supervisor

The Contractor must be represented on site by a supervisor, trained using the model Contractor accreditation plan as indicated in the Federal statutes for all portions of the herein listed work.

1.3.9 Hazard Communication

Adhere to all parts of 29 CFR 1926.59 and provide the Contracting Officer with a copy of the Safety Data Sheets (SDS) for all materials brought to the site.

1.3.10 Asbestos Hazard Abatement Plan

Submit a detailed plan of the safety precautions such as lockout, tagout, tryout, fall protection, and confined space entry procedures and equipment and work procedures to be used in the removaland demolition of materials containing asbestos. The plan, not to be combined with other hazard abatement plans, must be prepared, signed, and sealed by the PQP. Provide a Table of Contents for each abatement submittal, which follows the sequence of requirements in the contract. The plan must include but not be limited to the precise personal protective equipment to be used including, but not limited to, respiratory protection, type of whole-body protection and if reusable coveralls are to be employed decontamination methods (operations and quality control plan), the location of asbestos control areas including clean and dirty areas, buffer zones, showers, storage areas, change rooms, removal method, interface of trades involved in the construction, sequencing of asbestos related work, disposal plan, type of wetting agent and asbestos sealer to be used, locations of local

exhaust equipment, planned air monitoring strategies, and a detailed description of the method to be employed in order to control environmental pollution. The plan must also include (both fire and medical emergency) response plans and an Activity Hazard Analyses (AHAs) in accordance with EM 385-1-1. The Asbestos Hazard Abatement Plan must be approved in writing prior to starting any asbestos work. The Contractor, Asbestos Hazard Control Supervisor,, CP and PQP must meet with the Contracting Officer prior to beginning work, to discuss in detail the Asbestos Hazard Abatement Plan, including work procedures and safety precautions. Once approved by the Contracting Officer, the plan will be enforced as if an addition to the specification. Any changes required in the specification as a result of the plan must be identified specifically in the plan to allow for free discussion and approval by the Contracting Officer prior to starting work.

1.3.11 Testing Laboratory

Submit the name, address, and telephone number of each testing laboratory selected for the sampling, analysis, and reporting of airborne concentrations of asbestos fibers along with evidence that each laboratory selected holds the appropriate State license and permits and certification that each laboratory is American Industrial Hygiene Association (AIHA) accredited and that persons counting the samples have been judged proficient by current inclusion on the AIHA Asbestos Analysis Registry (AAR) and successful participation of the laboratory in the Proficiency Analytical Testing (PAT) Program. Where analysis to determine asbestos content in bulk materials or transmission electron microscopy is required, submit evidence that the laboratory is accredited by the National Institute of Science and Technology (NIST) under National Voluntary Laboratory Accreditation Program (NVLAP) for asbestos analysis. The testing laboratory firm must be independent of the asbestos contractor and must have no employee or employer relationship which could constitute a conflict of interest.

1.3.12 Landfill Approval

Submit written evidence that the landfill is approved for asbestos disposal by the U.S. Environmental Protection Agency, Region 5, U.S. EPA Region 5 Air Enforcement and Compliance Assurance Branch, and local regulatory agencies. Within three working days after delivery, submit detailed delivery tickets, prepared, signed, and dated by an agent of the landfill, certifying the amount of asbestos materials delivered to the landfill. Submit a copy of the waste shipment records within one day of the shipment leaving the project site.

1.3.13 Transporter Certification

Submit written evidence that the transporter is approved to transport asbestos waste in accordance with the DOT requirements of 49 CFR 171, 49 CFR 172 and 49 CFR 173 as well as registration requirements of 49 CFR 107 and all other State and local regulatory agency requirements.

1.3.14 Medical Certification

Provide a written certification for each worker and supervisor, signed by a licensed physician indicating that the worker and supervisor has met or exceeded all of the medical prerequisites listed herein and in 29 CFR 1926.1101 and 29 CFR 1926.103 as prescribed by law. Submit certificates prior to the start of work but after the main abatement

submittal.

1.4 SUBMITTALS

Government approval is required for submittals with a "G" or "S" classification. Submittals not having a "G" or "S" classification are for information only. When used, a code following the "G" classification identifies the office that will review the submittal for the Government. Submit the following in accordance with Section 01 33 00 SUBMITTAL PROCEDURES:

SD-03 Product Data

Amended Water; G

Safety Data Sheets (SDS) for All Materials; G

Encapsulants; G

Respirators; G

Local Exhaust Equipment; G

Pressure Differential Automatic Recording Instrument; G

Vacuums; G

Glovebags; G

SD-06 Test Reports

Air Sampling Results; G

Pressure Differential Recordings for Local Exhaust System; G

Encapsulation Test Patches; G

Clearance Sampling; G

Asbestos Disposal Quantity Report; G

SD-07 Certificates

Employee Training; G

Notifications; G

Respiratory Protection Program; G

Asbestos Hazard Abatement Plan; G

Testing Laboratory; G

Landfill Approval; G

Delivery Tickets; G

Waste Shipment Records; G

Transporter Certification; G

Medical Certification; G

Private Qualified Person Documentation; G

Designated Competent Person; G

Worker's License; G

Contractor's License; G

Federal, State or Local Citations on Previous Projects; G

Encapsulants; G

Equipment Used to Contain Airborne Asbestos Fibers; G

Water Filtration Equipment; G

Vacuums; G

Ventilation Systems; G

SD-11 Closeout Submittals

Permitsand Licenses; G

Notifications; G

Respirator Program Records; G

Protective Clothing Decontamination Quality Control Records; G

Protective Clothing Decontamination Facility Notification; G

Rental Equipment; G

1.5 QUALITY ASSURANCE

1.5.1 Private Qualified Person Documentation

Submit the name, address, and telephone number of the Private Qualified Person (PQP) selected to prepare the Asbestos Hazard Abatement Plan, direct monitoring and training, and documented evidence that the PQP has successfully completed training in and is accredited and where required is certified as, a Building Inspector, Contractor/Supervisor Abatement Worker, and Asbestos Project Designer as described by 40 CFR 763 and has successfully completed the National Institute of Occupational Safety and Health (NIOSH) 582 course "Sampling and Evaluating Airborne Asbestos Dust" or equivalent. The PQP must be appropriately licensed in the State of Ohio as a Project Monitor. The PQP and the asbestos contractor must not have an employee/employer relationship or financial relationship which could constitute a conflict of interest. The PQP must be a first tier subcontractor.

1.5.2 Designated Competent Person Documentation

The Designated Competent Person must be experienced in the administration and supervision of asbestos abatement projects including exposure

assessment and monitoring, work practices, abatement methods, protective measures for personnel, setting up and inspecting asbestos abatement work areas, evaluating the integrity of containment barriers, placement and operation of local exhaust systems, ACM generated waste containment and disposal procedures, decontamination units installation and maintenance requirements, site safety and health requirements, notification of other employees onsite. The Designated Competent Person must be on-site at all times when asbestos abatement activities are underway.Submit training certification and a current State of Ohio Asbestos Contractor's and Supervisor's License. Submit evidence that the Designated Competent Person has a minimum of 2 years of on-the-job asbestos abatement experience relevant to OSHA designated competent person requirements. The Designated Competent Person must be a first tier subcontractor.

1.5.3 Worker's License

Submit documentation that workers meet the requirements of 29 CFR 1926.1101, 40 CFR 61-SUBPART M and have a current State of Ohio Asbestos Workers License.

1.5.4 Contractor's License

Submit a copy of the asbestos contractor's license issued by the State of Ohio. Submit the following certification along with the license: "I certify that the personnel I am responsible for during the course of this project fully understand the contents of 29 CFR 1926.1101, 40 CFR 61-SUBPART MEM 385-1-1, and the Federal, State and local requirements for those asbestos abatement activities that they will be involved in." This certification statement must be signed by the Company's President or Chief Executive.

1.5.5 Air Sampling Results

Complete fiber counting and provide results to the PQP andGC for review within 16 hours of the "time off" of the sample pump. Notify the Contracting Officer immediately of any airborne levels of asbestos fibers in excess of the acceptable limits. Submit sampling results to the Contracting Officer and the affected Contractor employees where required by law within three working days, signed by the testing laboratory employee performing air sampling, the employee that analyzed the sample, and the PQP and GC. Notify the Contractor and the Contracting Officer immediately of any variance in the pressure differential which could cause adjacent unsealed areas to have asbestos fiber concentrations in excess of 0.01 fibers per cubic centimeter or background whichever is higher. In no circumstance must levels exceed 0.1 fibers per cubic centimeter.

1.5.6 Pressure Differential Recordings for Local Exhaust System

Provide a local exhaust system that creates a negative pressure of at least 0.02 inches of water relative to the pressure external to the enclosure and operate it continuously, 24-hours a day, until the temporary enclosure of the asbestos control area is removed. Submit pressure differential recordings for each work day to the PQP and GC for review and to the Contracting Officer within 24-hours from the end of each work day.

1.5.7 Protective Clothing Decontamination Quality Control Records

Provide all records that document quality control for the decontamination of reusable outer protective clothing.

1.5.8 Protective Clothing Decontamination Facility Notification

Submit written evidence that persons who decontaminate, store, or transport asbestos contaminated clothing used in the performance of this contract were duly notified in accordance with 29 CFR 1926.1101.

1.5.9 Federal, State or Local Citations on Previous Projects

Submit a statement, signed by an officer of the company, containing a record of any citations issued by Federal, State or local regulatory agencies relating to asbestos activities within the last 5 years (including projects, dates, and resolutions); a list of penalties incurred through non-compliance with asbestos project specifications, including liquidated damages, overruns in scheduled time limitations and resolutions; and situations in which an asbestos-related contract has been terminated (including projects, dates, and reasons for terminations). If there are none, a negative declaration signed by an officer of the company must be provided.

1.5.10 Preconstruction Conference

Conduct a safety preconstruction conference to discuss the details of the Asbestos Hazard Abatement Plan, Accident Prevention Plan (APP) including the AHAs required in specification Section 01 35 26 GOVERNMENTAL SAFETY REQUIREMENTS. The safety preconstruction conference must include the Contractor and their Designated Competent Person, Designated IH and Project Supervisor and the Contracting Officer. Deficiencies in the APP will be discussed. Onsite work must not begin until the APP has been accepted.

1.6 SECURITY

Basic Security must be provided for each regulated area. A log book must be kept documenting entry into and out of the regulated area. Entry into regulated areas must only be by personnel authorized by the Contractor and the Contracting Officer. Personnel authorized to enter regulated areas must be trained, medically evaluated, and wear the required personal protective equipment.

1.7 EQUIPMENT

1.7.1 Rental Equipment

Provide a copy of the written notification to the rental company concerning the intended use of the equipment and the possibility of asbestos contamination of the equipment.

PART 2 PRODUCTS

2.1 ENCAPSULANTS

Encapsulants must conform to current USEPA requirements, contain no toxic or hazardous substances as defined in 29 CFR 1926.59, and conform to the following performance requirements.

2.1.1 Removal Encapsulants not applicable

2.1.2 Bridging Encapsulant not applicable
2.1.3 Penetrating Encapsulant not applicable
2.1.4 Lock-down Encapsulant not applicable
2.2 ENCASEMENT PRODUCTS not applicable

2.3 DUCT TAPE

Industrial grade duct tape of appropriate widths suitable for bonding sheet plastic and disposal container.

2.4 DISPOSAL CONTAINERS

Leak-tight (defined as solids, liquids, or dust that cannot escape or spill out) disposal containers must be provided for ACM wastes as required by 29 CFR 1926.1101. Disposal containers can be in the form of:

a. Disposal Bags

b. Fiberboard Drums

c. Cardboard Boxes

2.5 SHEET PLASTIC

Sheet plastic must be polyethylene of 6 mil minimum thickness and must be provided in the largest sheet size necessary to minimize seams. Film must be clear,frosted, or black and conform to ASTM D4397, except as specified below

2.5.1 Flame Resistant

Where a potential for fire exists, flame-resistant sheets must be provided. Film must be frosted or black and must conform to the requirements of NFPA 701.

2.5.2 Reinforced

Reinforced sheets must be provided where high skin strength is required, such as where it constitutes the only barrier between the regulated area and the outdoor environment. The sheet stock must consist of translucent, nylon-reinforced or woven-polyethylene thread laminated between 2 layers of polyethylene film. Film must meet flame resistant standards of NFPA 701.

2.6 MASTIC REMOVING SOLVENT

Mastic removing solvent must be nonflammable and must not contain methylene chloride, glycol ether, or halogenated hydrocarbons. Solvents used onsite must have a flash point greater than 140 degrees F.

2.7 LEAK-TIGHT WRAPPING

Two layers of 6 mil minimum thick polyethylene sheet stock must be used for the containment of removed asbestos-containing components or materials such as large tanks, boilers, insulated pipe segments and other materials. Upon placement of the ACM component or material, each layer must be individually leak-tight sealed with duct tape.

2.8 VIEWING INSPECTION WINDOW

Where feasible, a minimum of one clear, 1/8 inch thick, acrylic sheet, 18 by 24 inches, must be installed as a viewing inspection window at eye level on a wall in each containment enclosure. The windows must be sealed leak-tight with industrial grade duct tape.

2.9 WETTING AGENTS

Removal encapsulant (a penetrating encapsulant) must be provided when conducting removal abatement activities that require a longer removal time or are subject to rapid evaporation of amended water. The removal encapsulant must be capable of wetting the ACM and retarding fiber release during disturbance of the ACM greater than or equal to that provided by amended water. Performance requirements for penetrating encapsulants are specified in paragraph ENCAPSULANTS above.

PART 3 EXECUTION

3.1 EQUIPMENT

Provide the Contracting Officer or the Contracting Officer's Representative, with at least two complete sets of personal protective equipment including decontaminating reusable coveralls as required for entry to and inspection of the asbestos control area. Provide equivalent training to the Contracting Officer or a designated representative as provided to Contractor employees in the use of the required personal protective equipment. Provide manufacturer's certificate of compliance for all equipment used to contain airborne asbestos fibers.

3.1.1 Air Monitoring Equipment

The Contractor's PQP must approve air monitoring equipment. The equipment must include, but must not be limited to:

a. High-volume sampling pumps that can be calibrated and operated at a constant airflow up to 16 liters per minute.

b. Low-volume, battery powered, body-attachable, portable personal pumps that can be calibrated to a constant airflow up to approximately 3.5 liters per minute, and a self-contained rechargeable power pack capable of sustaining the calibrated flow rate for a minimum of 10 hours. The pumps must also be equipped with an automatic flow control unit which must maintain a constant flow, even as filter resistance increases due to accumulation of fiber and debris on the filter surface.

c. Single use standard 25 mm diameter cassette, open face, 0.8 micron pore size, mixed cellulose ester membrane filters and cassettes with 50 mm electrically conductive extension cowl, and shrink bands for personal air sampling.

d. Single use standard 25 mm diameter cassette, open face, 0.45 micron pore size, mixed cellulose ester membrane filters and cassettes with 50 mm electrically conductive cowl, and shrink bands when conducting environmental area sampling using NIOSH NMAM Methods 7400 and 7402, (and the transmission electric microscopy method specified at 40 CFR 763 if required).

e. A flow calibrator capable of calibration to within plus or minus 2 percent of reading over a temperature range of minus 4 to plus 140 degrees F and traceable to a NIST primary standard.

3.1.2 Respirators

Select respirators from those approved by the National Institute for Occupational Safety and Health (NIOSH), Department of Health and Human Services.

3.1.2.1 Respirators for Handling Asbestos

Provide personnel engaged in pre-cleaning, cleanup, handling, removal and ordemolition of asbestos materials with respiratory protection as indicated in 29 CFR 1926.1101 and 29 CFR 1926.103. Breathing air must comply with CGA G-7.

3.1.3 Exterior Whole Body Protection

3.1.3.1 Outer Protective Clothing

Provide personnel exposed to asbestos with disposable "non-breathable," or reusable "non-breathable" whole body outer protective clothing, head coverings, gloves, and foot coverings. Provide disposable plastic or rubber gloves to protect hands. Cloth gloves may be worn inside the plastic or rubber gloves for comfort, but must not be used alone. Make sleeves secure at the wrists, make foot coverings secure at the ankles, and make clothing secure at the neck by the use of tape. Reusable whole body outer protective clothing must be either disposed of as asbestos contaminated waste upon exiting from the asbestos regulated work area or be properly decontaminated.

3.1.3.2 Work Clothing

Provide cloth work clothes for wear under the outer protective clothing and foot coverings and either dispose of or properly decontaminate them as recommended by the GCorPQP after each use.

3.1.3.3 Personal Decontamination Unit

Provide a temporary, negative pressure unit with a separate decontamination locker room and clean locker room with a shower that complies with 29 CFR 1926.51(f)(4)(ii) through (V) in between for personnel required to wear whole body protective clothing. Provide two separate lockers for each asbestos worker, one in each locker room. Keep street clothing and street shoes in the clean locker. HEPA vacuum and remove asbestos contaminated disposable protective clothing while still wearing respirators at the boundary of the asbestos work area and seal in impermeable bags or containers for disposal. HEPA vacuum and remove asbestos contaminated reusable protective clothing while still wearing respirators at the boundary of the asbestos work area, seal in two impermeable bags, label outer bag as asbestos contaminated waste, and transport for decontamination. Do not wear work clothing between home and work. Locate showers between the decontamination locker room and the clean locker room and require that all employees shower before changing into street clothes. Collect used shower water and filter with approved water filtration equipment to remove asbestos contamination. Wastewater filters must be installed in series with the first stage pore size 20 microns and the second stage pore size of 5 microns. Dispose of filters

and residue as asbestos waste. Discharge clean water to the sanitary system. Dispose of asbestos contaminated work clothing as asbestos contaminated waste or properly decontaminate as specified in the Contractor's Asbestos Hazard Abatement Plan. Keep the floor of the decontamination unit's clean room dry and clean at all times. Proper housekeeping and hygiene requirements must be maintained. Provide soap and towels for showering, washing and drying. Cloth towels provided must be disposed of as ACM waste or must be laundered in accordance with 29 CFR 1926.1101. Physically attach the decontamination units to the asbestos control area. Construct both a personnel decontamination unit and an equipment decontamination unit onto and integral with each asbestos control area.

3.1.3.4 Decontamination of Reusable Outer Protective Clothing

When reusable outer protective clothing is used, transport the double bagged clothing to a previously notified commercial/industrial decontamination facility for decontamination. Perform non-destructive testing to determine the effectiveness of asbestos decontamination. If representative sampling is used, ensure the statistical validity of the sampling results. If representative sampling is used, reject any entire batch in which any of the pieces exceed 40 fibers per square millimeter. Inspect reusable protective clothing prior to use to ensure that it will provide adequate protection and is not or is not about to become ripped, torn, deteriorated, or damaged, and that it is not visibly contaminated. Notify, in writing, all personnel involved in the decontamination of reusable outer protective clothing as indicated in 29 CFR 1926.1101.

3.1.3.5 Eye Protection

Provide eye protection that complies with ANSI/ISEA Z87.1 when operations present a potential eye injury hazard. Provide goggles to personnel engaged in asbestos abatement operations when the use of a full face respirator is not required.

3.1.4 Regulated Areas

All Class I, II, and III asbestos work must be conducted within regulated areas. The regulated area must be demarcated to minimize the number of persons within the area and to protect persons outside the area from exposure to airborne asbestos. Control access to regulated areas, ensure that only authorized personnel enter, and verify that Contractor required medical surveillance, training and respiratory protection program requirements are met prior to allowing entrance.

3.1.5 Load-out Unit

Provide a temporary load-out unit that is adjacent and connected to the regulated area andaccess tunnel. Attach the load-out unit in a leak-tight manner to each regulated area.

3.1.6 Warning Signs and Labels

Provide bilingual warning signs printed in English and Spanis at all approaches to asbestos control areas. Locate signs at such a distance that personnel may read the sign and take the necessary protective steps required before entering the area. Provide labels and affix to all asbestos materials, scrap, waste, debris, and other products contaminated with asbestos. Containers with preprinted warning labels conforming to

the requirements are acceptable

3.1.6.1 Warning Sign

Provide vertical format conforming to 29 CFR 1926.200, and 29 CFR 1926.1101 minimum 20 by 14 inches displaying the following legend in the lower panel:

Legend	Notation
DANGER	one inch Sans Serif Gothic or Block
ASBESTOS	one inch Sans Serif Gothic or Block
MAY CAUSE CANCER	one inch Sans Serif Gothic or Block
CAUSES DAMAGE TO LUNGS	1/4 inch Sans Serif Gothic or Block
AUTHORIZED PERSONNEL ONLY	1/4 inch Sans Serif Gothic or Block
WEAR RESPIRATORY PROTECTION AND PROTECTIVE CLOTHING IN THIS AREA	1/4 inch Sans Serif Gothic or Block

Spacing between lines must be at least equal to the height of the upper of any two lines.

3.1.6.2 Warning Labels

Provide labels conforming to 29 CFR 1926.1101 of sufficient size to be clearly legible, displaying the following legend:

DANGER
CONTAINS ASBESTOS FIBERS
MAY CAUSE CANCER
CAUSES DAMAGE TO LUNGS
DO NOT BREATHE DUST AVOID CREATING DUST

3.1.7 Local Exhaust System

Provide a local exhaust system in the asbestos control area in accordance with ASSP Z9.2 and 29 CFR 1926.1101 that will provide at least four air changes per hour inside of the negative pressure enclosure. Local exhaust equipment must be operated 24-hours per day, until the asbestos control area is removed and must be leak proof to the filter and equipped with HEPA filters. Maintain a minimum pressure differential in the control

area of minus 0.02 inch of water column relative to adjacent, unsealed areas. Provide continuous 24-hour per day monitoring of the pressure differential with a pressure differential automatic recording instrument. The building ventilation system must not be used as the local exhaust system for the asbestos control area. Filters on exhaust equipment must conform to ASSP Z9.2 and UL 586. Terminate the local exhaust system out of doors and remote from any public access or ventilation system intakes.

3.1.8 Tools

Vacuums must be leak proof to the filter and equipped with HEPA filters. Filters on vacuums must conform to ASSP Z9.2 and UL 586. Do not use power tools to remove asbestos containing materials unless the tool is equipped with effective, integral HEPA filtered exhaust ventilation systems. Remove all residual asbestos from reusable tools prior to storage or reuse. Reusable tools must be thoroughly decontaminated prior to being removed from the regulated areas.

3.1.9 Rental Equipment

If rental equipment is to be used, furnish written notification to the rental agency concerning the intended use of the equipment and the possibility of asbestos contamination of the equipment.

3.1.10 Glovebags

Submit written manufacturers proof that glovebags will not break down under expected temperatures and conditions.

3.1.11 Single Stage Decontamination Area

A decontamination area (equipment room/area) must be provided for Class I work involving less than 25 feet or 10 square feet of TSI or surfacing ACM, and for Class II and Class III asbestos work operations where exposures exceed the PELs or where there is no negative exposure assessment. The equipment room or area must be adjacent to the regulated area for the decontamination of employees, material, and their equipment which could be contaminated with asbestos. The area must be covered by an impermeable drop cloth on the floor or horizontal working surface. The area must be of sufficient size to accommodate cleaning of equipment and removing personal protective equipment without spreading contamination beyond the area.

3.1.12 Decontamination Area Exit Procedures

Ensure that the following procedures are followed:

a. Before leaving the regulated area, remove all gross contamination and debris from work clothing using a HEPA vacuum.

b. Employees must remove their protective clothing in the equipment room and deposit the clothing in labeled impermeable bags or containers for disposal or laundering.

c. Employees must not remove their respirators until showering.

d. Employees must shower prior to entering the clean room. If a shower has not been located between the equipment room and the clean room or the work is performed outdoors, ensure that employees engaged in Class

I asbestos jobs: a) Remove asbestos contamination from their work suits in the equipment room or decontamination area using a HEPA vacuum before proceeding to a shower that is not adjacent to the work area; or b) Remove their contaminated work suits in the equipment room, without cleaning worksuits, and proceed to a shower that is not adjacent to the work area.

3.2 WORK PROCEDURE

Perform asbestos related work in accordance with 29 CFR 1926.1101, 40 CFR 61-SUBPART M,NAVFAC P-502, and as specified herein. Use wet or if given prior EPA approval, dry removal procedures and negative pressure enclosure techniques. Wear and utilize protective clothing and equipment as specified herein. No eating, smoking, drinking, chewing gum, tobacco, or applying cosmeticsis permitted in the asbestos work or control areas. Personnel of other trades not engaged in the removal and demolition of asbestos containing material must not be exposed at any time to airborne concentrations of asbestos unless all the personnel protection and training provisions of this specification are complied with by the trade personnel. Seal all roof top penetrations, except plumbing vents, prior to asbestos roofing work. Shut down the building heating, ventilating, and air conditioning system, cap the openings to the system, and provide temporary heating, and ventilation, and air conditioning prior to the commencement of asbestos work. Power to the regulated area must be locked-out and tagged in accordance with 29 CFR 1910.147. Disconnect electrical service when wet removal is performed and provide temporary electrical service with verifiable ground fault circuit interrupter (GFCI) protection prior to the use of any water. All electrical work must be performed by a licensed electrician. Stop abatement work in the regulated area immediately when the airborne total fiber concentration: (1) equals or exceeds 0.01 f/cc, or the pre-abatement concentration, whichever is greater, outside the regulated area; or (2) equals or exceeds 1.0 f/cc inside the regulated area. Correct the condition to the satisfaction of the Contracting Officer, including visual inspection and air sampling. Work must resume only upon notification by the Contracting Officer. Corrective actions must be documented. If an asbestos fiber release or spill occurs outside of the asbestos control area, stop work immediately, correct the condition to the satisfaction of the Contracting Officer including clearance sampling, prior to resumption of work.

3.2.1 Building Ventilation System and Critical Barriers

Building ventilation system supply and return air ducts in a regulated area must be shut down and isolated by lockable switch or other positive means in accordance with 29 CFR 1910.147 isolated by airtight seals to prevent the spread of contamination throughout the system. The airtight seals must consist of air-tight rigid covers for building ventilation supply and exhaust grills where the ventilation system is required to remain in service during abatement with 2 layers of polyethylene. Edges to wall, ceiling and floor surfaces must be sealed with industrial grade duct tape.

a. A Competent Person must supervise the work.

b. For indoor work, critical barriers must be placed over all openings to the regulated area.

c. Impermeable dropcloths must be placed on surfaces beneath all removal activity.

3.2.2 Protection of Existing Work to Remain

Perform work without damage or contamination of adjacent work. Where such work is damaged or contaminated as verified by the Contracting Officer using visual inspection or sample analysis, it must be restored to its original condition or decontaminated by the Contractor at no expense to the Government as deemed appropriate by the Contracting Officer. This includes inadvertent spill of dirt, dust, or debris in which it is reasonable to conclude that asbestos may exist. When these spills occur, stop work immediately. Then clean up the spill. When satisfactory visual inspection and air sampling results are obtained from the PQPGC work may proceed at the discretion of the Contracting Officer.

3.2.3 Furnishings

Furniture and equipment will be removed from the area of work by the Government before asbestos work begins.

Furniture and equipment will remain in the building. Cover and seal furnishings with 6-mil plastic sheet or remove from the work area and store in a location on site approved by the Contracting Officer.

Furnishings listed below and located in the work area are considered to be contaminated with asbestos fibers. Transfer these items to an area on site approved by the Contracting Officer, decontaminate (wet methods where possible), and then store until the room from which they came is declared clean and safe for entry. Carpets, draperies, and other items with porous, non-solid surfaces can not be suitably cleaned and must be properly disposed of as contaminated waste. At the conclusion of the asbestos removal work and cleanup operations, transfer all objects so removed and cleaned back to the area from which they came and re-install them. Base bids on decontaminating:

a. 0 Desks

b. 0 Filing cabinets

c. 0 Linear feet of shelving

d. 0 Cubic feet of books, papers, files.

3.2.4 Precleaning

Wet wipe and HEPA vacuum all surfaces potentially contaminated with asbestos prior to establishment of an enclosure.

3.2.5 Asbestos Control Area Requirements

3.2.5.1 Negative Pressure Enclosure

Removal of asbestos contaminated acoustical ceiling tiles,spray applied fireproofing,thermal system insulation,gypsum wallboard/joint compound require the use of a negative pressure enclosure. Block and seal openings in areas where the release of airborne asbestos fibers can be expected. Establish an asbestos negative pressure enclosure with the use of curtains, portable partitions, or other enclosures in order to prevent the

escape of asbestos fibers from the contaminated asbestos work area. Negative pressure enclosure development must include protective covering of uncontaminated walls, and ceilings with a continuous membrane of two layers of minimum 6-mil plastic sheet sealed with tape to prevent water or other damage. Provide two layers of 6-mil plastic sheet over floors and extend a minimum of 12 inches up walls. Seal all joints with tape. Provide local exhaust system in the asbestos control area. Openings will be allowed in enclosures of asbestos control areas for personnel and equipment entry and exit, the supply and exhaust of air for the local exhaust system and the removal of properly containerized asbestos containing materials. Replace local exhaust system filters as required to maintain the efficiency of the system.

3.2.5.2 Glovebag

If the construction of a negative pressure enclosure is infeasible for the removalof Asbestos Containing Material in exterior overhead door side frame caulking (overhead doors in loading dock, 1100, and 1200, 4 doors/8 frames) and brick expansion joints (asphalt)(Breck seams on North, South and East sides of the building, 24 joints). Use alternate techniques as indicated in 29 CFR 1926.1101. Establish designated limits for the asbestos regulated area with the use of rope or other continuous barriers, and maintain all other requirements for asbestos control areas. The PQP must conduct personal samples of each worker engaged in asbestos handling (removal, disposal, transport and other associated work) throughout the duration of the project. If the quantity of airborne asbestos fibers monitored at the breathing zone of the workers at any time exceeds background or 0.01 fibers per cubic centimeter whichever is greater, stop work, evacuate personnel in adjacent areas or provide personnel with approved protective equipment at the discretion of the Contracting Officer. This sampling may be duplicated by the Government at the discretion of the Contracting Officer. If the air sampling results obtained by the Government differ from those obtained by the Contractor, the Government will determine which results predominate. If adjacent areas are contaminated as determined by the Contracting Officer, clean the contaminated areas, monitor, and visually inspect the area as specified herein.

3.2.5.3 Regulated Area for Class II Removal

Removal of asbestos containing floor tile/mastic,carpet/mastic, sealants, are Class II removal activities. Establish designated limits for the asbestos regulated work area with the use of red barrier tape; install critical barriers, splash guards and signs, and maintain all other requirements for asbestos control area except local exhaust. Place impermeable dropcloths on surfaces beneath removal activity extending out 3 feet in all directions. A detached decontamination system may be used. Conduct area monitoring of airborne fibers during the work shift at the designated limits of the asbestos work area and conduct personal samples of each worker engaged in the work. If workers the airborne fiber concentration of the workers or designated limits at any time exceeds background or 0.01 fibers per cubic centimeter, whichever is greater, stop work immediately and correct the situation.

3.2.6 Removal Procedures

Wet asbestos material with a fine spray of amended water during removal, cutting, or other handling so as to reduce the emission of airborne fibers. Remove material and immediately place in 6 mil plastic disposal

bags. Remove asbestos containing material in a gradual manner, with continuous application of the amended water or wetting agent in such a manner that no asbestos material is disturbed prior to being adequately wetted. Where unusual circumstances prohibit the use of 6 mil plastic bags, submit an alternate proposal for containment of asbestos fibers to the Contracting Officer for approval. For example, in the case where both piping and insulation are to be removed, the Contractor may elect to wet the insulation, wrap the pipes and insulation in plastic and remove the pipe by sections. Containerize asbestos containing material while wet. Do not allow asbestos material to accumulate or become dry. Lower and otherwise handle asbestos containing material as indicated in 40 CFR 61-SUBPART M.

3.2.6.1 Sealing Contaminated Items Designated for Disposal

Remove contaminated architectural, mechanical, and electrical appurtenances such as venetian blinds, full-height partitions, carpeting, duct work, pipes and fittings, radiators, light fixtures, conduit, panels, and other contaminated items designated for removal by completely coating the items with an asbestos lock-down encapsulant at the demolition site before removing the items from the asbestos control area. These items need not be vacuumed. The asbestos lock-down encapsulant must be tinted a contrasting color and spray-applied by airless method. Thoroughness of sealing operation must be visually gauged by the extent of colored coating on exposed surfaces. Lock-down encapsulants must comply with the performance requirements specified herein.

3.2.6.2 Exposed Pipe Insulation Edges

Contain edges of asbestos insulation to remain that are exposed by a removal operation. Wet and cut the rough ends true and square with sharp tools and then encapsulate the edges with a 1/4 inch thick layer of non-asbestos containing insulating cement troweled to a smooth hard finish. When cement is dry, lag the end with a layer of non-asbestos lagging cloth, overlapping the existing ends by at least 4 inches. When insulating cement and cloth is an impractical method of sealing a raw edge of asbestos, take appropriate steps to seal the raw edges as approved by the Contracting Officer.

3.2.7 Methods of Compliance

3.2.7.1 Mandated Practices

The specific abatement techniques and items identified must be detailed in the Contractor's AHAP. Use the following engineering controls and work practices in all operations, regardless of the levels of exposure:

a. Vacuum cleaners equipped with HEPA filters.

b. Wet methods or wetting agents except where it can be demonstrated that the use of wet methods is unfeasible due to the creation of electrical hazards, equipment malfunction, and in roofing.

c. Prompt clean-up and disposal.

d. Inspection and repair of polyethylene.

e. Cleaning of equipment and surfaces of containers prior to removing them from the equipment room or area.

3.2.7.2 Control Methods

Use the following control methods:

a. Local exhaust ventilation equipped with HEPA filter;

b. Enclosure or isolation of processes producing asbestos dust;

c. Where the feasible engineering and work practice controls are not sufficient to reduce employee exposure to or below the PELs, use them to reduce employee exposure to the lowest levels attainable and must supplement them by the use of respiratory protection.

3.2.7.3 Unacceptable Practices

The following work practices must not be used:

a. High-speed abrasive disc saws that are not equipped with point of cut ventilator or enclosures with HEPA filtered exhaust air.

b. Compressed air used to remove asbestos containing materials, unless the compressed air is used in conjunction with an enclosed ventilation system designed to capture the dust cloud created by the compressed air.

c. Dry sweeping, shoveling, or other dry clean up.

d. Employee rotation as a means of reducing employee exposure to asbestos.

3.2.8 Class I Work Procedures

In addition to requirements of paragraphs MANDATED PRACTICES and CONTROL METHODS, the following engineering controls and work practices must be used:

a. A Competent Person must supervise the installation and operation of the control methods.

b. For jobs involving the removal of more than 25 feet or 10 square feet of TSI or surfacing material, place critical barriers over all openings to the regulated area.

c. HVAC systems must be isolated in the regulated area by sealing with a double layer of plastic or air-tight rigid covers.

d. Impermeable dropcloths (6 mil or greater thickness) must be placed on surfaces beneath all removal activity.

e. Where a negative exposure assessment has not been provided or where exposure monitoring shows the PEL was exceeded, the regulated area must be ventilated with a HEPA unit and employees must use PPE.

3.2.9 Specific Control Methods for Class I Work

Use Class I work procedures, control methods and removal methods for the following ACM:

a. Spray Applied Fireproofing

b. Gypsum Wallboard and Joint Compound

c. Thermal System Insulation and Mudded Pipe Fittings

d. Plaster and Textured Ceilings and Walls

e. Vermiculite

3.2.9.1 Negative Pressure Enclosure (NPE) System

The system must provide at least four air changes per hour inside the containment. The local exhaust unit equipment must be operated 24-hours per day until the containment is removed. The NPE must be smoke tested for leaks at the beginning of each shift and be sufficient to maintain a minimum pressure differential of minus 0.02 inch of water column relative to adjacent, unsealed areas. Pressure differential must be monitored continuously, 24-hours per day, with an automatic manometric recording instrument and Records must be provided daily on the same day collected to the Contracting Officer. The Contracting Officer must be notified immediately if the pressure differential falls below the prescribed minimum. The building ventilation system must not be used as the local exhaust system for the regulated area. The NPE must terminate outdoors unless an alternate arrangement is allowed by the Contracting Officer. All filters used must be new at the beginning of the project and must be periodically changed as necessary and disposed of as ACM waste.

3.2.9.2 Glovebag Systems

Glovebags must be used without modification, smoke-tested for leaks, and completely cover the circumference of pipe or other structures where the work is to be done. Glovebags must be used only once and must not be moved. Glovebags must not be used on surfaces that have temperatures exceeding 150 degrees F. Prior to disposal, glovebags must be collapsed using a HEPA vacuum. Before beginning the operation, loose and friable material adjacent to the glovebag operation must be wrapped and sealed in 2 layers of plastic or otherwise rendered intact. At least two persons must perform glovebag removal. Asbestos regulated work areas must be established for glovebag abatement. Designated boundary limits for the asbestos work must be established with rope or other continuous barriers and all other requirements for asbestos control areas must be maintained, including area signage and boundary warning tape.

a. Attach HEPA vacuum systems to the bag to prevent collapse during removal of ACM.

b. The negative pressure glove boxes must be fitted with gloved apertures and a bagging outlet and constructed with rigid sides from metal or other material which can withstand the weight of the ACM and water used during removal. A negative pressure must be created in the system using a HEPA filtration system. The box must be smoke tested for leaks prior to each use.

3.2.9.3 Mini-Enclosure

Single bulkhead containment, Double bulkhead containment, or Mini-containment small walk-in enclosure to accommodate no more than two persons, may be used if the disturbance or removal can be completely contained by the enclosure. The mini-enclosure must be inspected for

leaks and smoke tested before each use. Air movement must be directed away from the employee's breathing zone within the mini-enclosure.

3.2.9.4 Wrap and Cut Operation

Prior to cutting pipe, the asbestos-containing insulation must be wrapped with polyethylene and securely sealed with duct tape to prevent asbestos becoming airborne as a result of the cutting process. The following steps must be taken: install glovebag, strip back sections to be cut 6 inches from point of cut, and cut pipe into manageable sections.

3.2.9.5 Class I Removal Method

Class I ACM must be removed using a control method described above. Prepare work area as previously specified. Establish designated limits for the asbestos regulated work area with the use of red barrier tape, critical barriers, signs, and maintain all other requirements for asbestos control area. Spread one layer of 6-mil seamless plastic sheeting on the floor below the work area. Remove asbestos containing spray applied fireproofing using a scraper and wet methods and immediately place into 6-mil thickness disposal bag. After removal of the material use a wire brush to clean the exposed substrate to remove residual material. Continue wet cleaning until surfaces are free of visible debris. Cut manageable sections of gypsum wallboard and joint compound and immediately place into a 6-mil minimum thickness disposal bag or other approved container. Make every effort to keep the material from falling to the floor of the work area. Use a wire brush and wet clean to remove residual material from studs. Continue wet cleaning until the surface is clean of visible material and encapsulate stud walls. Remove ACM thermal system insulation and mudded pipe fittings using mechanical means and wet methods and immediately place into 6-mil thickness disposal bag. Continue wet cleaning until surfaces are free of visible debris. Remove ACM plaster ceilings or walls using mechanical means and adequately wet methods and immediately place into 6-mil thickness disposal bag. Make every effort to keep the material from falling to the floor of the work area. Continue wet cleaning until surfaces are free of visible debris. Remove ACM textured ceiling finish using a scraper and wet methods and immediately place into 6-mil thickness disposal bag. Floors are considered contaminated from fallen textured ceiling finish. Clean up debris on floor and dispose of carpet as asbestos contaminated material. After removal of the material use a wire brush to clean the exposed concrete ceiling to remove residual material. Continue wet cleaning until surfaces are free of visible debris. Remove ACM vermiculite using mechanical means and adequately wet methods and immediately place into 6-mil thickness disposal bag. Make every effort to keep the material from falling to the floor of the work area. Continue wet cleaning until surfaces are free of visible debris. Bag all asbestos debris which has fallen to the floor as asbestos-containing debris. Place all debris in plastic disposal bags of 6-mil minimum thickness. Once the material is in the disposal bag, apply additional water as needed to achieve "adequately wet" conditions for NESHAP compliance. Place bagged asbestos waste under negative pressure with the use of a HEPA vacuum, goose neck and duck tape to seal the bag, wash to remove any visible contamination and place into a second 6-mil minimum thickness disposal bag. Containerize asbestos containing waste while wet. Lower and otherwise handle asbestos containing materials as indicated in 40 CFR 61-SUBPART M. Conduct area monitoring of airborne fibers during the work shift at the designated limits of the asbestos work area and conduct personal samples of each worker engaged in the work. If the quantity of airborne asbestos fibers monitored at the breathing zone

of the workers or the designated limits at any time exceeds background or 0.01 fibers per cubic centimeter, whichever is greater, stop work, and immediately correct the situation.

3.2.10 Class II Work Procedures

In addition to the requirements of paragraphs MANDATED PRACTICES and CONTROL METHODS, the following engineering controls and work practices must be used:

a. A Competent Person must supervise the work.

b. For indoor work, critical barriers must be placed over all openings to the regulated area.

c. Impermeable dropcloths must be placed on surfaces beneath all removal activity.

3.2.11 Specific Control Methods for Class II Work

3.2.11.1 Vinyl and Asphaltic Flooring MaterialsCarpet and Mastic
Not Applicable

3.2.11.2 Sealants and Mastic

Establish designated limits for the asbestos regulated work area with the use of red barrier tape, critical barriers and signs, and maintain all other requirements for asbestos control area except local exhaust. Spread 6-mil plastic sheeting on the ground around the perimeter of the work area extending out in all directions. Using adequately wet methods, carefully remove the ACM sealants and mastics using a scraper of knife blade. As it is removed place the material into a disposal bag. Make every effort to keep the asbestos material from falling to the ground or work area floor below. Dry sweeping is prohibited. Use vacuums equipped with HEPA filter and disposable dust bag. Place debris into a 6-mil minimum thickness disposal bag or other approved container. Once the material is in the disposal bag, apply additional water as needed to achieve "adequately wet" conditions for NESHAP compliance. Place bagged asbestos waste under negative pressure with the use of a HEPA vacuum, goose neck and duck tape to seal the bag, wash to remove any visible contamination and place into a second 6-mil minimum thickness disposal bag. Containerize asbestos containing waste while wet. Lower and otherwise handle asbestos containing materials as indicated in 40 CFR 61-SUBPART M. Conduct area monitoring of airborne fibers during the work shift at the designated limits of the asbestos work area and conduct personal samples of each worker engaged in the work. If the airborne fiber concentration of the workers or at designated limits at any time exceeds background or 0.01 fibers per cubic centimeter, whichever is greater, stop work immediately and correct the situation.

3.2.11.3 Suspect Fire Doors

Establish designated limits for the asbestos regulated work area with the use of red barrier tape, critical barriers, signs, and maintain all other requirements for asbestos control area except local exhaust. A detached decontamination system may be used. Spread 6-mil plastic sheeting on the ground beneath the work area and around the perimeter of the work area extending out in all directions. Remove door intact from hinges and wrap

with 6-mil plastic sheeting. Inspect the interior areas of the door to determine if ACM is present. If ACM is not present the door may be disposed of as general construction debris. If ACM is present place whole door in enclosed container for disposal. Conduct area monitoring of airborne fibers during the work shift at the designated limits of the asbestos work area and conduct personal samples of each worker engaged in the work. If the airborne fiber concentration of the workers or designated limits at any time exceeds background or 0.01 fibers per cubic centimeter, whichever is greater, stop work immediately and correct the situation.

3.2.11.4 Roofing Materials not applicable

3.2.11.5 Cementitious Siding and Shingles or Transite Panels not applicable

3.2.11.6 Gaskets

Establish designated limits for the asbestos regulated work area with the use of red barrier tape, critical barriers, signs, and maintain all other requirements for asbestos control area except local exhaust. Gaskets must be thoroughly wetted with amended water prior to removal and immediately placed in a disposal container. If a gasket is visibly deteriorated and unlikely to be removed intact, removal must be undertaken within a glovebag. Any scraping to remove residue must be performed wet. Place debris into a 6-mil minimum thickness disposal bag or other approved container. Once the material is in the disposal bag, apply additional water as needed to achieve "adequately wet" conditions for NESHAP compliance. Place bagged asbestos waste under negative pressure with the use of a HEPA vacuum, goose neck and duck tape to seal the bag, wash to remove any visible contamination and place into a second 6-mil minimum thickness disposal bag. Containerize asbestos containing waste while wet. Conduct area monitoring of airborne fibers during the work shift at the designated limits of the asbestos work area and conduct personal samples of each worker engaged in the work. If the airborne fiber concentration of the workers or designated limits at any time exceeds background or 0.01 fibers per cubic centimeter, whichever is greater, stop work immediately and correct the situation.

3.2.12 Encapsulation Procedures Not applicable

3.2.12.1 Preparation of Test Patches

3.2.12.2 Field Testing Not Applicable

3.2.12.3 Large-Scale Application Not Applicable

3.2.13 Abatement of Asbestos Contaminated Soil Not Applicable

3.2.14 Air Sampling

Perform sampling of airborne concentrations of asbestos fibers in

accordance with 29 CFR 1926.1101, the Contractor's air monitoring plan and as specified herein. Sampling performed in accordance with 29 CFR 1926.1101 must be performed by the PQP. Sampling performed for environmental and quality control reasons must be performed by thePQPGC. Unless otherwise specified, use NIOSH Method 7400 for sampling and analysis. Monitoring may be duplicated by the Government at the discretion of the Contracting Officer. If the air sampling results obtained by the Government differ from those results obtained by the Contractor, the Government will determine which results predominate. Results of breathing zone samples must be posted at the job site and made available to the Contracting Officer. Submit all documentation regarding initial exposure assessments, negative exposure assessments, and air-monitoring results.

3.2.14.1 Sampling Prior to Asbestos Work

Provide area air sampling and establish the baseline one day prior to the masking and sealing operations for each demolitionremoval site. Establish the background by performing area sampling in similar but uncontaminated sites in the building.

3.2.14.2 Sampling During Asbestos Work

The PQP must provide personal and area sampling as indicated in 29 CFR 1926.1101 and governing environmental regulations. Breathing zone samples must be taken for at least 25 percent of the workers in each shift, or a minimum of two, whichever is greater. Air sample fiber counting must be completed and results provided within 24-hours (breathing zone samples), and 24 hours hours (environmental/clearance monitoring) after completion of a sampling period. In addition, provided the same type of work is being performed, provide area sampling at least once every work shift close to the work inside the enclosure, outside the clean room entrance to the enclosure, and at the exhaust opening of the local exhaust system. If sampling outside the enclosure shows airborne levels have exceeded background or 0.01 fibers per cubic centimeter, whichever is greater, stop all work, correct the condition(s) causing the increase, and notify the Contracting Officer immediately. Where alternate methods are used, perform personal and area air sampling at locations and frequencies that will accurately characterize the evolving airborne asbestos levels. The written results must be signed by testing laboratory analyst, testing laboratory principal and the Contractor's PQP or GC. The air sampling results must be documented on a Contractor's daily air monitoring log.

The PQP must provide personal sampling as indicated in 29 CFR 1926.1101. Breathing zone samples must be taken for at least 25 percent of the workers in each shift, or a minimum of two, whichever is greater. Breathing zone samples must be taken for at least 25 percent of the workers in each shift, or a minimum of two, whichever is greater. Air sample fiber counting must be completed and results provided within 24-hours (breathing zone samples), and 24 hours (environmental/clearance monitoring) after completion of a sampling period. At the same time the GC will provide area sampling close to the work inside the enclosure, outside the clean room entrance to the enclosure, and at the exhaust opening of the local exhaust system. In addition, provided the same type of work is being performed, the GC will provide area sampling once every work shift close to the work inside the enclosure, outside the clean room entrance to the enclosure, and at the exhaust opening of the local exhaust system. If sampling outside the enclosure shows airborne levels have exceeded background or 0.01 fibers per cubic centimeter, whichever is

greater, stop all work, correct the condition(s) causing the increase, and notify the Contracting Officer immediately. Where alternate methods are used, perform personal and area air sampling at locations and frequencies that will accurately characterize the evolving airborne asbestos levels. The written results must be signed by testing laboratory analyst, testing laboratory principal and the Contractor's PQP orGC. The air sampling results must be documented on a Contractor's daily air monitoring log.

3.2.14.3 Final Clearance Requirements, NIOSH PCM Method

For PCM sampling and analysis using NIOSH NMAM Method 7400, the fiber concentration inside the abated regulated area, for each airborne sample, must be less than 0.01 f/cc. The abatement inside the regulated area is considered complete when every PCM final clearance sample is below the clearance limit. If any sample result is greater than 0.01 total f/cc, the asbestos fiber concentration (asbestos f/cc) must be confirmed from that same filter using NIOSH NMAM Method 7402 (TEM) at Contractor's expense. If any confirmation sample result is greater than 0.01 asbestos f/cc, abatement is incomplete and cleaning must be repeated at the Contractor's expense. Upon completion of any required recleaning, resampling with results to meet the above clearance criteria must be done at the Contractor's expense.

3.2.14.4 Final Clearance Requirements, EPA TEM Method

For EPA TEM sampling and analysis, using the EPA Method specified in 40 CFR 763, abatement inside the regulated area is considered complete when the arithmetic mean asbestos concentration of the five inside samples is less than or equal to 70 structures per square millimeter (70 S/mm). When the arithmetic mean is greater than 70 S/mm, the three blank samples must be analyzed. If the three blank samples are greater than 70 S/mm, resampling must be done. If less than 70 S/mm, the five outside samples must be analyzed and a Z-test analysis performed. When the Z-test results are less than 1.65, the decontamination must be considered complete. If the Z-test results are more than 1.65, the abatement is incomplete and cleaning must be repeated. Upon completion of any required recleaning, resampling with results to meet the above clearance criteria must be done at the Contractor's expense.

3.2.14.5 Sampling After Final Clean-Up (Clearance Sampling)

Provide area sampling of asbestos fibers using aggressive air sampling techniques as defined in the EPA 560/5-85-024 and establish an airborne asbestos concentration of less than 0.01 fibers per cubic centimeter after final clean-up but before removal of the enclosure or the asbestos work control area. After final cleanup and the asbestos control area is dry but prior to clearance sampling, the PQP a must perform a visual inspection in accordance with ASTM E1368 to ensure that the asbestos control and work area is free of any accumulations of dirt, dust, or debris. Prepare a written report signed and dated by the PQP documenting that the asbestos control area is free of dust, dirt, and debris and all waste has been removed. Perform at least 3 samples. Use transmission electron microscopy (TEM) to analyze clearance samples and report the results in accordance with current NIOSH criteria. The asbestos fiber counts from these samples must be less than 0.01 fibers per cubic centimeter or be not greater than the background, whichever is greater. Should any of the final samples indicate a higher value take appropriate actions to re-clean the area and repeat the sampling and TEM analysis at the Contractor's expense.

3.2.14.6 Air Clearance Failure

If clearance sampling results fail to meet the final clearance requirements, pay all costs associated with the required recleaning, resampling, and analysis, until final clearance requirements are met.

3.2.15 Lock-Down

Prior to removal of plastic barriers and after pre-clearance clean up of gross contamination, the PQP orGC must conduct a visual inspection of all areas affected by the removal in accordance with ASTM E1368. Inspect for any visible fibers, and to ensure that encapsulants were applied evenly and appropriately. Spray apply a post removal (lock-down) encapsulant to ceiling, walls, floors and other areas exposed in the removal area. The exposed areaincludes but is not limited to plastic barriers, furnishings and articles to be discarded as well as dirty change room, air locks for bag removal and decontamination chambers.

3.2.16 Site Inspection

While performing asbestos engineering control work, the Contractor must be subject to on-site inspection by the Contracting Officer who may be assisted by or represented by safety or industrial hygiene personnel. If the work is found to be in violation of this specification, the Contracting Officer or his representative will issue a stop work order to be in effect immediately and until the violation is resolved. All related costs including standby time required to resolve the violation must be at the Contractor's expense.

3.3 CLEAN-UP AND DISPOSAL

3.3.1 Housekeeping

Essential parts of asbestos dust control are housekeeping and clean-up procedures. Maintain surfaces of the asbestos control area free of accumulations of asbestos fibers. Give meticulous attention to restricting the spread of dust and debris; keep waste from being distributed over the general area. Use HEPA filtered vacuum cleaners. DO NOT BLOW DOWN THE SPACE WITH COMPRESSED AIR. When asbestos removal is complete, all asbestos waste is removed from the work-site, and final clean-up is completed, the Contracting Officer will attest that the area is safe before the signs can be removed. After final clean-up and acceptable airborne concentrations are attained but before the HEPA unit is turned off and the enclosure removed, remove all pre-filters on the building HVAC system and provide new pre-filters. Dispose of filters as asbestos contaminated materials. Reestablish HVAC mechanical, and electrical systems in proper working order. The Contracting Officer will visually inspect all surfaces within the enclosure for residual material or accumulated dust or debris. The Contractor must re-clean all areas showing dust or residual materials. If re-cleaning is required, air sample and establish an acceptable asbestos airborne concentration after re-cleaning. The Contracting Officer must agree that the area is safe in writing before unrestricted entry will be permitted. The Government must have the option to perform monitoring to determine if the areas are safe before entry is permitted.

3.3.2 Title to Materials

All waste materials, except as specified otherwise, become the property of the Contractor and must be disposed of as specified in applicable local, State, and Federal regulations and herein.

3.3.3 Disposal of Asbestos

3.3.3.1 Procedure for Disposal

Coordinate all waste disposal manifests with the Contracting Officer and NAVFAC EV. Collect asbestos waste, contaminated waste water filters, asbestos contaminated water, scrap, debris, bags, containers, equipment, and asbestos contaminated clothing which may produce airborne concentrations of asbestos fibers and place in sealed fiber-proof, waterproof, non-returnable containers (e.g. double plastic bags 6 mils thick, cartons, drums or cans). Wastes within the containers must be adequately wet in accordance with 40 CFR 61-SUBPART M. Affix a warning and Department of Transportation (DOT) label to each container including the bags or use at least 6 mils thick bags with the approved warnings and DOT labeling preprinted on the bag. Clearly indicate on the outside of each container the name of the waste generator and the location at which the waste was generated. Prevent contamination of the transport vehicle (especially if the transport vehicle is a rented truck likely to be used in the future for non-asbestos purposes). These precautions include lining the vehicle cargo area with plastic sheeting (similar to work area enclosure) and thorough cleaning of the cargo area after transport and unloading of asbestos debris is complete. Dispose of waste asbestos material at an Environmental Protection Agency (EPA) or State-approved asbestos landfill off Government property. For temporary storage, store sealed impermeable bags in asbestos waste drums or skids. An area for interim storage of asbestos waste-containing drums or skids will be assigned by the Contracting Officer or his authorized representative. Comply with 40 CFR 61-SUBPART M, State, regional, and local standards for hauling and disposal. Sealed plastic bags may be dumped from drums into the burial site unless the bags have been broken or damaged. Damaged bags must remain in the drum and the entire contaminated drum must be buried. Uncontaminated drums may be recycled. Workers unloading the sealed drums must wear appropriate respirators and personal protective equipment when handling asbestos materials at the disposal site.

3.3.3.2 Asbestos Disposal Quantity Report

Direct the PQP to record and report, to the Contracting Officer, the amount of asbestos containing material removed and released for disposal. Deliver the report for the previous day at the beginning of each day shift with amounts of material removed during the previous day reported in linear feet or square feet as described initially in this specification and in cubic feet for the amount of asbestos containing material released for disposal.

Allow the GC to inspect, record and report the amount of asbestos containing material removed and released for disposal on a daily basis.

-- End of Section --

P2# 519087 - DSSC DLA Repair Building 27
Columbus, OH

SECTION 02 83 00

LEAD REMEDIATION
11/18

PART 1 GENERAL

1.1 REFERENCES

The publications listed below form a part of this specification to the extent referenced. The publications are referred to within the text by the basic designation only.

AMERICAN SOCIETY OF SAFETY PROFESSIONALS (ASSP)

ASSP Z9.2	(2018) Fundamentals Governing the Design and Operation of Local Exhaust Ventilation Systems

NATIONAL FIRE PROTECTION ASSOCIATION (NFPA)

NFPA 701	(2023; ERTA 1 2023) Standard Methods of Fire Tests for Flame Propagation of Textiles and Films

U.S. ARMY CORPS OF ENGINEERS (USACE)

EM 385-1-1	(2024) Safety -- Safety and Occupational Health (SOH) Requirements

U.S. DEPARTMENT OF HOUSING AND URBAN DEVELOPMENT (HUD)

HUD 6780	(1995; Errata Aug 1996;Rev Ch. 7 - 1997) Guidelines for the Evaluation and Control of Lead-Based Paint Hazards in Housing

U.S. NATIONAL ARCHIVES AND RECORDS ADMINISTRATION (NARA)

29 CFR 1926.21	Safety Training and Education
29 CFR 1926.33	Access to Employee Exposure and Medical Records
29 CFR 1926.55	Gases, Vapors, Fumes, Dusts, and Mists
29 CFR 1926.59	Hazard Communication
29 CFR 1926.62	Lead
29 CFR 1926.65	Hazardous Waste Operations and Emergency Response
29 CFR 1926.103	Respiratory Protection
29 CFR 1926.1126	Chromium
29 CFR 1926.1127	Cadmium

40 CFR 260	Hazardous Waste Management System: General
40 CFR 261	Identification and Listing of Hazardous Waste
40 CFR 262	Standards Applicable to Generators of Hazardous Waste
40 CFR 263	Standards Applicable to Transporters of Hazardous Waste
40 CFR 264	Standards for Owners and Operators of Hazardous Waste Treatment, Storage, and Disposal Facilities
40 CFR 265	Interim Status Standards for Owners and Operators of Hazardous Waste Treatment, Storage, and Disposal Facilities
40 CFR 268	Land Disposal Restrictions
40 CFR 745	Lead-Based Paint Poisoning Prevention in Certain Residential Structures
49 CFR 172	Hazardous Materials Table, Special Provisions, Hazardous Materials Communications, Emergency Response Information, and Training Requirements
49 CFR 178	Specifications for Packagings

U.S. NAVAL FACILITIES ENGINEERING SYSTEMS COMMAND (NAVFAC)

ND OPNAVINST 5100.23	(2005; Rev G) Navy Occupational Safety and Health (NAVOSH) Program Manual

UL SOLUTIONS (UL)

UL 586	(2009; Reprint Sep 2022) UL Standard for Safety High-Efficiency Particulate, Air Filter Units

1.2 DEFINITIONS

1.2.1 Action Level

Employee exposure, without regard to use of respirators, to an airborne concentration of lead of 30 micrograms per cubic meter of air averaged over an 8-hour period; to an airborne concentration of cadmium of 2.5 micrograms per cubic meter of air averaged over an 8-hour period; to an airborne concentration of chromium (VI) of 2.5 micrograms per cubic meter of air averaged over an 8-hour period.

1.2.2 Area Sampling

Sampling of lead, cadmium, chromium concentrations within the lead, cadmium, chromium control area and inside the physical boundaries which is representative of the airborne lead, cadmium, chromium concentrations but is not collected in the breathing zone of personnel (approximately 5 to 6

feet above the floor).

1.2.3 Cadmium Permissible Exposure Limit (PEL)

Five micrograms per cubic meter of air as an 8-hour time weighted average as determined by 29 CFR 1926.1127. If an employee is exposed for more than 8-hours in a work day, determine the PEL by the following formula:

PEL (micrograms/cubic meter of air) = 40/No. hrs worked per day

1.2.4 Certified Industrial Hygienist (CIH)

As used in this section refers to a person retained by the Contractor who is certified as an industrial hygienist and who is trained in the recognition and control of lead, cadmium and chromium hazards in accordance with current federal, State, and local regulations. CIH must be certified for comprehensive practice by the American Board of Industrial Hygiene. The Certified Industrial Hygienist must be independent of the Contractor and must have no employee or employer relationship which could constitute a conflict of interest.

1.2.5 Competent Person (CP)

As used in this section, refers to a person employed by the Contractor who is trained in the recognition and control of lead, cadmium and chromium hazards in accordance with current federal, State, and local regulations and has the authority to take prompt corrective actions to control the lead, cadmium and chromium hazard. The Contractor may provide more than one CP as required to supervise and monitor the work. The CP must be a Certified Industrial Hygienist (CIH) certified by the American Board of Industrial Hygiene or a Certified Safety Professional (CSP) certified by the Board of Certified Safety Professionals or a licensed lead-based paint abatement Supervisor/Project Designer in the State of Ohio.

1.2.6 Contaminated Room

Refers to a room for removal of contaminated personal protective equipment (PPE).

1.2.7 Decontamination Shower Facility

That facility that encompasses a clean clothing storage room, and a contaminated clothing storage and disposal rooms, with a shower facility in between.

1.2.8 Deleading

Activities conducted by a person who offers to eliminate lead-based paint or lead-based paint hazards or paints containing cadmium/chromium or to plan such activities in commercial buildings, bridges or other structures.

1.2.9 Eight-Hour Time Weighted Average (TWA)

Airborne concentration of lead, cadmium, chromium to which an employee is exposed, averaged over an 8-hour workday as indicated in 29 CFR 1926.62, 29 CFR 1926.1126, 29 CFR 1926.1127.

1.2.10 High Efficiency Particulate Air (HEPA) Filter Equipment

HEPA filtered vacuuming equipment with a UL 586 filter system capable of collecting and retaining lead, cadmium, chromiumcontaminated particulate. A high efficiency particulate filter demonstrates at least 99.97 percent efficiency against 0.3 micron or larger size particles.

1.2.11 Lead

Metallic lead, inorganic lead compounds, and organic lead soaps. Excludes other forms of organic lead compounds. The use of the term Lead in this section also refers to paints which contain detectable concentrations of Cadmium and Chromium. For the purposes of the section lead-based paint (LBP) and paint with lead (PWL) also contains cadmium and chromium.

1.2.12 Lead-Based Paint (LBP)

Paint or other surface coating that contains lead in excess of 1.0 milligrams per centimeter squared or 0.5 percent by weight.

1.2.13 Lead, Cadmium, Chromium Control Area

A system of control methods to prevent the spread of lead, cadmium, chromium dust, paint chips or debris to adjacent areas that may include temporary containment, floor or ground cover protection, physical boundaries, and warning signs to prevent unauthorized entry of personnel. HEPA filtered local exhaust equipment may be used as engineering controls to further reduce personnel exposures or building/outdoor environmental contamination.

1.2.14 Lead Permissible Exposure Limit (PEL)

Fifty micrograms per cubic meter of air as an 8-hour time weighted average as determined by 29 CFR 1926.62. If an employee is exposed for more than 8-hours in a work day, determine the PEL by the following formula:

PEL (micrograms/cubic meter of air) = 400/No. hrs worked per day

1.2.15 Material Containing Lead/Paint with Lead (MCL/PWL)

Any material, including paint, which contains lead as determined by the testing laboratory using a valid test method. The requirements of this section does not apply if no detectable levels of lead are found using a quantitative method for analyzing paint or MCL using laboratory instruments with specified limits of detection (usually 0.01 percent). An X-Ray Fluorescence (XRF) instrument is not considered a valid test method.

1.2.16 Personal Sampling

Sampling of airborne lead, cadmium, chromium concentrations within the breathing zone of an employee to determine the 8-hour time weighted average concentration in accordance with 29 CFR 1926.62, 29 CFR 1926.1126, 29 CFR 1926.1127. Samples must be representative of the employees' work tasks. Breathing zone must be considered an area within a hemisphere, forward of the shoulders, with a radius of 6 to 9 inches and centered at the nose or mouth of an employee.

1.2.17 Physical Boundary

Area physically roped or partitioned off around lead, cadmium, chromium control area to limit unauthorized entry of personnel.

1.3 DESCRIPTION

Construction activities impacting PWL or material containing leadwhich are covered by this specification include the demolition or removal of material containing leadand as indicated on the drawings. The work covered by this section includes work tasks and the precautions specified in this section for the protection of building occupants and the environment during and after the performance of the hazard abatement activities.

1.3.1 Protection of Existing Areas To Remain

Project work including, but not limited to, lead, cadmium, chromium hazard abatement work, storage, transportation, and disposal must be performed without damaging or contaminating adjacent work and areas. Where such work or areas are damaged or contaminated, restore work and areas to the original condition.

1.3.2 Coordination with Other Work

Coordinate with work being performed in adjacent areas to ensure there are no exposure issues. Explain coordination procedures in the Lead, Cadmium, Chromium Compliance Plan and describe how the Contractor will prevent lead, cadmium and chromium exposure to other contractors and Government personnel performing work unrelated to lead, cadmium and chromium activities.

1.4 SUBMITTALS

Government approval is required for submittals with a "G" or "S" classification. Submittals not having a "G" or "S" classification are for information only. When used, a code following the "G" classification identifies the office that will review the submittal for the Government. Submit the following in accordance with Section 01 33 00 SUBMITTAL PROCEDURES:

SD-01 Preconstruction Submittals

Competent Person Qualifications; G

Training Certification; G

Occupational and Environmental Assessment Data Report; G

Medical Examinations; G

Lead, Cadmium, Chromium Waste Management Plan; G

Licenses, Permits and Notifications; G

Occupant Protection Plan; G

Lead, Cadmium, Chromium Compliance Plan; G

Initial Sample Results; G

Written Evidence of TSD Approval; G

SD-03 Product Data

Respirators; G

Vacuum Filters; G

Negative Air Pressure System; G

Materials and Equipment; G

Expendable Supplies; G

Local Exhaust Equipment; G

Pressure Differential Automatic Recording Instrument; G

Pressure Differential Log; G

SD-06 Test Reports

Occupational and Environmental Assessment Data Report; G

Sampling Results; G

Pressure Differential Recordings For Local Exhaust System; G

SD-07 Certificates

Testing Laboratory; G

Third Party Consultant Qualifications; G

Occupant Notification; G

Notification of the Commencement of LBP Hazard Abatement; G

Clearance Certification; G

SD-11 Closeout Submittals

Hazardous Waste Manifest; G

Turn-In Documents or Weight Tickets; G

1.5 QUALITY ASSURANCE

1.5.1 Qualifications

1.5.1.1 Competent Person (CP)

Submit name, address, and telephone number of the CP selected to perform responsibilities specified in paragraph COMPETENT PERSON (CP) RESPONSIBILITIES. Provide documented construction project-related

experience with implementation of OSHA's Lead in Construction standard (29 CFR 1926.62), Chromium standard (29 CFR 1926.1126), Cadmium standard (29 CFR 1926.1127) which shows ability to assess occupational and environmental exposure to lead, cadmium, chromium; experience with the use of respirators, personal protective equipment and other exposure reduction methods to protect employee health. Demonstrate a minimum of 3 years experience implementing OSHA's Lead in Construction standard (29 CFR 1926.62), Chromium standard (29 CFR 1926.1126), and Cadmium standard (29 CFR 1926.1127). Submit proper documentation that the CP is trained and licensedand certified in accordance with federal, StateOhio and local laws. The competent person must be a licensed lead-based paint abatement Supervisor/Project Designer in the State of Ohio.

1.5.1.2 Training Certification

Submit a certificate for each worker and supervisor, signed and dated by the accredited training provider, stating that the employee has received the required lead, cadmium and chromium training specified in 29 CFR 1926.62, 29 CFR 1926.1126, 29 CFR 1926.1127 and is certified to perform or supervise deleading, lead removal or demolition activities in the State ofOhio.

1.5.1.3 Testing Laboratory

Submit the name, address, and telephone number of the testing laboratory selected to perform the air, soil, and wipe analysis, testing, and reporting of airborne concentrations of lead, cadmium and chromium. Use a laboratory participating in the EPA National Lead Laboratory Accreditation Program (NLLAP) by being accredited by either the American Association for Laboratory Accreditation (A2LA) or the American Industrial Hygiene Association (AIHA) and that is successfully participating in the Environmental Lead Proficiency Analytical Testing (ELPAT) program to perform sample analysis. Laboratories selected to perform blood lead analysis must be OSHA approved.

1.5.1.4 Third Party Consultant Qualifications

Submit the name, address and telephone number of the third party consultant selected to perform the wipe sampling for determining concentrations of lead, cadmium and chromium in dust. Submit proper documentation that the consultant is trained and certified as an inspector technician or inspector/risk assessor by the USEPA authorized State (or local) certification and accreditation program.

1.5.2 Requirements

1.5.2.1 Competent Person (CP) Responsibilities

a. Verify training meets all federal, State, and local requirements.

b. Review and approve Lead, Cadmium, Chromium Compliance Plan for conformance to the applicable referenced standards.

c. Continuously inspect LBP/PWL or MCL work for conformance with the approved plan.

d. Perform (or oversee performance of) air sampling. Recommend upgrades or downgrades (whichever is appropriate based on exposure) on the use of PPE (respirators included) and engineering controls.

e. Ensure work is performed in strict accordance with specifications at all times.

f. Control work to prevent hazardous exposure to human beings and to the environment at all times.

g. Supervise final cleaning of the lead, cadmium, chromium control area, take clearance wipe samples if necessary; review clearance sample results and make recommendations for further cleaning.

h. Certify the conditions of the work as called for elsewhere in this specification.

1.5.2.2 Lead, Cadmium, Chromium Compliance Plan

Submit a detailed job-specific plan of the work procedures to be used in the disturbance of lead, cadmium and chromium, LBP/PWL or MCL. Include in the plan a sketch showing the location, size, and details of lead, cadmium, chromium control areas, critical barriers, physical boundaries, location and details of decontamination facilities, viewing ports, and mechanical ventilation system. Include a description of equipment and materials, work practices, controls and job responsibilities for each activity from which lead, cadmium, chromium is emitted. Include in the plan, eating, drinking, smoking, hygiene facilities and sanitary procedures, interface of trades, sequencing of lead, cadmium, chromium related work, collected waste water and dust containing lead, cadmium, chromium and debris, air sampling, respirators, personal protective equipment, and a detailed description of the method of containment of the operation to ensure that lead, cadmium, chromium is not released outside of the lead, cadmium, chromium control area. Include site preparation, cleanup and clearance procedures. Include occupational and environmental sampling, training and strategy, sampling and analysis strategy and methodology, frequency of sampling, duration of sampling, and qualifications of sampling personnel in the air sampling portion of the plan. Include a description of arrangements made among contractors on multicontractor worksites to inform affected employees and to clarify responsibilities to control exposures.

The plan must be developed and signed by a certified Lead Project Designer in the State of Ohio. The plan must include the name and certification number of the person signing the plan.

In occupied buildings, the plan must also include an occupant protection program that describes the measures that will be taken during the work to notify and protect the building occupants.

1.5.2.3 Occupational and Environmental Assessment Data Report

If initial monitoring is necessary, submit occupational and environmental sampling results to the Contracting Officer within three working days of collection, signed by the testing laboratory employee performing the analysis, the employee that performed the sampling, and the CP.

In order to reduce the full implementation of 29 CFR 1926.62, 29 CFR 1926.1126, 29 CFR 1926.1127 the Contractor must provide documentation. Submit a report that supports the determination to reduce full implementation of the requirements of 29 CFR 1926.62,29 CFR 1926.1126, 29 CFR 1926.1127 and supporting the Lead, Cadmium, Chromium Compliance

Plan.

a. The initial monitoring must represent each job classification, or if working conditions are similar to previous jobs by the same employer, provide previously collected exposure data that can be used to estimate worker exposures per 29 CFR 1926.62,29 CFR 1926.1126, 29 CFR 1926.1127. The data must represent the worker's regular daily exposure to lead, cadmium, chromium for stated work.

b. Submit worker exposure data gathered during the task based trigger operations of 29 CFR 1926.62, 29 CFR 1926.1126, 29 CFR 1926.1127 with a complete process description. This includes manual demolition, manual scraping, manual sanding, heat gun, power tool cleaning, rivet busting, cleanup of dry expendable abrasives, abrasive blast enclosure removal, abrasive blasting, welding, cutting and torch burning where lead, cadmium and chromium containing coatings are present.

c. The initial assessment must determine the requirement for further monitoring and the need to fully implement the control and protective requirements including the lead, cadmium, chromium compliance plan per 29 CFR 1926.62, 29 CFR 1926.1126, 29 CFR 1926.1127.

1.5.2.4 Medical Examinations

Submit pre-work blood lead levels and post-work blood lead levels for all workers performing lead, cadmium, chromium activities during the execution of the work. Initial medical surveillance as required by 29 CFR 1926.62, 29 CFR 1926.1126, 29 CFR 1926.1127 must be made available to all employees exposed to lead, cadmium, chromium at any time (one day) above the action level. Full medical surveillance must be made available to all employees on an annual basis who are or may be exposed to lead, cadmium and chromium in excess of the action level for more than 30 days a year or as required by 29 CFR 1926.62, 29 CFR 1926.1126, 29 CFR 1926.1127. Adequate records must show that employees meet the medical surveillance requirements of 29 CFR 1926.33, 29 CFR 1926.62, 29 CFR 1926.1126, 29 CFR 1926.1127 and 29 CFR 1926.103. Provide medical surveillance to all personnel exposed to lead, cadmium, chromium as indicated in 29 CFR 1926.62, 29 CFR 1926.1126, 29 CFR 1926.1127. Maintain complete and accurate medical records of employees for the duration of employment plus 30 years.

1.5.2.5 Training

Train each employee performing work that disturbs lead, cadmium, chromium, who performs LBP/MCL/PWL disposal, and air sampling operations prior to the time of initial job assignment and annually thereafter, in accordance with 29 CFR 1926.21, 29 CFR 1926.62, 29 CFR 1926.1126, 29 CFR 1926.1127 and State Ohio and local regulations where appropriate.

1.5.2.6 Respiratory Protection Program

a. Provide each employee required to wear a respirator a respirator fit test at the time of initial fitting and at least annually thereafter as required by 29 CFR 1926.62, 29 CFR 1926.1126, 29 CFR 1926.1127.

b. Establish and implement a respiratory protection program as required by 29 CFR 1926.103, 29 CFR 1926.62, 29 CFR 1926.1126, 29 CFR 1926.1127 and 29 CFR 1926.55.

1.5.2.7 Hazard Communication Program

Establish and implement a Hazard Communication Program as required by 29 CFR 1926.59.

1.5.2.8 Lead, Cadmium, Chromium Waste Management

The Lead, Cadmium, Chromium Waste Management Plan must comply with applicable requirements of federal, State, and local hazardous waste regulations and address:

a. Identification and classification of wastes associated with the work.

b. Estimated quantities of wastes to be generated and disposed of.

c. Names and qualifications of each contractor that will be transporting, storing, treating, and disposing of the wastes. Include the facility location and operator and a 24-hour point of contact. Furnish two copies of USEPA, State Of Ohio(in accordance with Ohio Revised Code, andlocal hazardous wastepermit applicationspermitsmanifests,and USEPA Identification numbers.

d. Names and qualifications (experience and training) of personnel who will be working on-site with hazardous wastes.

e. List of waste handling equipment to be used in performing the work, to include cleaning, volume reduction, and transport equipment.

f. Spill prevention, containment, and cleanup contingency measures including a health and safety plan to be implemented in accordance with 29 CFR 1926.65.

g. Work plan and schedule for waste containment, removal and disposal. Proper containment of the waste includes using acceptable waste containers (e.g., 55-gallon drums) as well as proper marking/labeling of the containers. Clean up and containerize wastes daily.

h. Include any process that may alter or treat waste rendering a hazardous waste non hazardous.

i. Unit cost for hazardous waste disposal according to this plan.

1.5.2.9 Environmental, Safety and Health Compliance

In addition to the detailed requirements of this specification, comply with laws, ordinances, rules, and regulations of federal, State, and local authorities regarding lead, cadmium and chromium. Comply with the applicable requirements of the current issue of 29 CFR 1926.62, 29 CFR 1926.1126, 29 CFR 1926.1127, EM 385-1-1, ND OPNAVINST 5100.23. Submit matters regarding interpretation of standards to the Contracting Officer for resolution before starting work. Where specification requirements and the referenced documents vary, the most stringent requirements apply. The following local and State laws, ordinances, criteria, rules and regulations regarding removing, handling, storing, transporting, and disposing of lead, cadmium and chromium-contaminated materials apply:

Licensing and certification in the state of Ohio is required.

1.5.3 Pressure Differential Recordings for Local Exhaust System

Provide a local exhaust system that creates a negative pressure of at least 0.02 inches of water relative to the pressure external to the enclosure and operate it continuously, 24-hours a day, until the temporary enclosure of the lead, cadmium, chromium control area is removed. Submit pressure differential recordings for each work day to the PQP and GC for review and to the Contracting Officer within 24-hours from the end of each work day.

1.5.4 Licenses, Permits and Notifications

Certify and submit in writing to the Regional Office of the EPA Ohio state's environmental protection agency responsible for lead hazard abatement activities and the Contracting Officer at least 10 days prior to the commencement of work that licenses, permits and notifications have been obtained. All associated fees or costs incurred in obtaining the licenses, permits and notifications are included in the contract price.

1.5.5 Occupant Protection Plan

The certified project designer must develop and implement an Occupant Protection Plan describing the measures and management procedures to be taken during lead, cadmium and chromium hazard abatement activities to protect the building occupants/building facilities and the outside environment from exposure to any lead, cadmium and chromium contamination while lead, cadmium and chromium hazard abatement activities are performed.

1.5.6 Pre-Construction Conference

Along with the CP, meet with the Contracting Officer to discuss in detail the Lead, Cadmium, Chromium Waste Management Plan and the Lead, Cadmium, Chromium Compliance Plan, including procedures and precautions for the work.

1.6 EQUIPMENT

1.6.1 Respirators

Furnish appropriate respirators approved by the National Institute for Occupational Safety and Health (NIOSH), Department of Health and Human Services, for use in atmospheres containing lead, cadmium and chromium dust, fume and mist. Respirators must comply with the requirements of 29 CFR 1926.62, 29 CFR 1926.1126, 29 CFR 1926.1127.

1.6.2 Special Protective Clothing

Personnel exposed to lead, cadmium, chromiumcontaminated dust must wear proper disposable,uncontaminated, or reusable protective whole body clothing, head covering, gloves, eye, and foot coverings as required by 29 CFR 1926.62, 29 CFR 1926.1126, 29 CFR 1926.1127. Furnish proper disposable plastic or rubber gloves to protect hands. Reduce the level of protection only after obtaining approval from the CP.

1.6.3 Rental Equipment Notification

If rental equipment is to be used during PWL or MCL handling and disposal, notify the rental agency in writing concerning the intended use of the equipment.

1.6.4 Vacuum Filters

UL 586 labeled HEPA filters.

1.6.5 Equipment for Government Personnel

Furnish the Contracting Officer with two complete sets of personal protective equipment (PPE) daily, as required herein, for entry into and inspection of the lead, cadmium and chromium removal work within the lead, cadmium and chromium controlled area. Personal protective equipment must include disposable whole body covering, including appropriate foot, head, eye, and hand protection. PPE remains the property of the Contractor. The Government will provide respiratory protection for the Contracting Officer.

1.6.6 Abrasive Removal Equipment

The use of powered machine for vibrating, sanding, grinding, or abrasive blasting is prohibited unless equipped with local exhaust ventilation systems equipped with high efficiency particulate air (HEPA) filters.

1.6.7 Negative Air Pressure System

1.6.7.1 Minimum Requirements

Do not proceed with work in the area until containment is set up and HEPA filtration systems are in place. The negative air pressure system must meet the requirements of ASSP Z9.2 including approved HEPA filters in accordance with UL 586. Negative air pressure equipment must be equipped with new HEPA filters, and be sufficient to maintain a minimum pressure differential of minus 0.02 inch of water column relative to adjacent, unsealed areas. Negative air pressure system minimum requirements are listed as follows:

a. The unit must be capable of delivering its rated volume of air with a clean first stage filter, an intermediate filter and a primary HEPA filter in place.

b. The HEPA filter must be certified as being capable of trapping and retaining mono-disperse particles as small as 0.3 micrometers at a minimum efficiency of 99.97 percent.

c. The unit must be capable of continuing to deliver no less than 70 percent of rated capacity when the HEPA filter is 70 percent full or measures 2.5 inches of water static pressure differential on a magnehelic gauge.

d. Equip the unit with a manometer-type negative pressure differential monitor with minor scale division of 0.02 inch of water and accuracy within plus or minus 1.0 percent. The manometer must be calibrated daily as recommended by the manufacturer.

e. Equip the unit with a means for the operator to easily interpret the readings in terms of the volumetric flow rate of air per minute moving through the machine at any given moment.

f. Equip the unit with an electronic mechanism that automatically shuts the machine off in the event of a filter breach or absence of a filter.

g. Equip the unit with an audible horn that sounds an alarm when the machine has shut itself off.

h. Equip the unit with an automatic safety mechanism that prevents a worker from improperly inserting the main HEPA filter.

1.6.7.2 Auxiliary Generator

Provide an auxiliary generator with capacity to power a minimum of 50 percent of the negative air machines at any time during the work. When power fails, the generator controls must automatically start the generator and switch the negative air pressure system machines to generator power. The generator must not present a carbon monoxide hazard to workers.

1.6.8 Vacuum Systems

Vacuum systems must be suitably sized for the project, and filters must be capable of trapping and retaining all mono-disperse particles as small as 0.3 micrometers (mean aerodynamic diameter) at a minimum efficiency of 99.97 percent. Properly dispose of used filters that are being replaced.

1.6.9 Heat Blower Guns

Heat blower guns must be flameless, electrical, paint-softener type with controls to limit temperature to 1,100 degrees F. Heat blower must be (grounded) 120 volts ac, and must be equipped with cone, fan, glass protector and spoon reflector nozzles.

1.7 PROJECT/SITE CONDITIONS

1.7.1 Protection of Existing Work to Remain

Perform work without damage or contamination of adjacent areas. Where existing work is damaged or contaminated, restore work to its original condition or better as determined by the Contracting Officer.

PART 2 PRODUCTS

2.1 MATERIALS AND EQUIPMENT

Keep materials and equipment needed to complete the project available and on the site. Submit a description of the materials and equipment required; including Safety Data Sheets (SDSs) for material brought onsite to perform the work.

2.1.1 Expendable Supplies

Submit a description of the expendable supplies required.

2.1.1.1 Polyethylene Bags

Disposable bags must be polyethylene plastic and be a minimum of 6 mils thick (4 mils thick if double bags are used) or any other thick plastic material shown to demonstrate at least equivalent performance; and capable of being made leak-tight. Leak-tight means that solids, liquids or dust cannot escape or spill out.

2.1.1.2 Polyethylene Leak-tight Wrapping

Wrapping used to wrap lead, cadmium, chromium contaminated debris must be polyethylene plastic that is a minimum of 6 mils thick or any other thick plastic material shown to demonstrate at least equivalent performance.

2.1.1.3 Polyethylene Sheeting

Sheeting must be polyethylene plastic with a minimum thickness of 6 mil, or any other thick plastic material shown to demonstrate at least equivalent performance; and be provided in the largest sheet size reasonably accommodated by the project to minimize the number of seams. Where the project location constitutes an out of the ordinary potential for fire, or where unusual fire hazards cannot be eliminated, provide flame-resistant polyethylene sheets which conform to the requirements of NFPA 701.

2.1.1.4 Tape and Adhesive Spray

Tape and adhesive must be capable of sealing joints between polyethylene sheets and for attachment of polyethylene sheets to adjacent surfaces. After dry application, tape or adhesive must retain adhesion when exposed to wet conditions, including amended water. Tape must be minimum 2 inches wide, industrial strength.

2.1.1.5 Containers

When used, containers must be leak-tight and be labeled in accordance with EPA, DOT and OSHA standards.

2.1.1.6 Chemical Paint Strippers

Chemical paint strippers must not contain methylene chloride and be formulated to prevent stain, discoloration, or raising of the substrate materials.

2.1.1.7 Chemical Paint Stripper Neutralizer

Neutralizers for paint strippers must be compatible with the substrate and suitable for use with the chemical stripper that has been applied to the surface.

2.1.1.8 Detergents and Cleaners

Detergents or cleaning agents must not contain trisodium phosphate and have demonstrated effectiveness in lead, cadmium and chromium control work using cleaning techniques specified by HUD 6780 guidelines.

PART 3 EXECUTION

3.1 PREPARATION

3.1.1 Protection

3.1.1.1 Notification

a. Notify the Contracting Officer 20 days prior to the start of any lead, cadmium and chromium work.

b. Occupant Notification

Submit occupant written acknowledgment of the delivery of lead hazard information pamphlet (EPA 747-K-99-001 "Protect Your Family From Lead in Your Home") prior to commencing the renovation work for each affected unit using language provided in 40 CFR 745 Subpart E.

c. Notification of the Commencement of LBP Hazard Abatement

Submit a copy of the notification of the commencement of LBP hazard abatement to the proper authorities according to the procedures established by the COR.

3.1.1.2 Lead, Cadmium, Chromium Control Area

a. Physical Boundary - Provide physical boundaries around the lead, cadmium, chromium control area by roping off the area designated in the work plan or providing curtains, portable partitions or other enclosures to ensure that lead, cadmium and chromium will not escape outside of the lead, cadmium and chromium control area. Prohibit the general public from accessing the lead, cadmium, chromium control areas.

b. Warning Signs - Provide warning signs at approaches to lead, cadmium, chromium control areas. Locate signs at such a distance that personnel may read the sign and take the necessary precautions before entering the area. Signs must comply with the requirements of 29 CFR 1926.62.

3.1.1.3 Furnishings

The Government will remove furniture and equipment from the building before lead, cadmium and chromium work begins.

Furnitureand equipment will remain in the building orlead, cadmium, chromium control area. Protect and cover furnishings or remove furnishings from the work area and store in a location approved by the Contracting Officer.

Existing furniture andequipment is lead, cadmium and chromium contaminated, decontaminate ordispose of as lead, cadmium, chromium contaminated waste.

3.1.1.4 Heating, Ventilating and Air Conditioning (HVAC) Systems

Shut down, lock out, and isolate HVAC systems that supply, exhaust, or pass through the lead, cadmium, chromium control areas. Seal intake and exhaust vents in the lead, cadmium, chromium control area with 6 mil plastic sheet and tape. Seal seams in HVAC components that pass through the lead, cadmium, chromium control area. Provide temporary HVAC system for areas in which HVAC has been shut down outside the lead, cadmium, chromium control area.

3.1.1.5 Local Exhaust System

Provide a local exhaust system in the lead, cadmium, chromium control area in accordance with ASSP Z9.2, 29 CFR 1926.62, 29 CFR 1926.1126 and 29 CFR 1926.1127 that will provide at least 4 air changes per hour inside of the negative pressure enclosure. Local exhaust equipment must be

operated 24-hours per day, until the lead, cadmium, chromium control area is removed and must be leak proof to the filter and equipped with HEPA filters. Maintain a minimum pressure differential in the lead, cadmium, chromium control area of minus 0.02 inch of water column relative to adjacent, unsealed areas. Provide continuous 24-hour per day monitoring of the pressure differential with a pressure differential automatic recording instrument. The building ventilation system must not be used as the local exhaust system for the lead, cadmium, chromium control area. Filters on exhaust equipment must conform to ASSP Z9.2 and UL 586. Terminate the local exhaust system out of doors and remote from any public access or ventilation system intakes.

3.1.1.6 Negative Air Pressure System Containment

a. Operate the negative air pressure systems to provide at least 4 air changes per hour inside the containment. Operate the local exhaust unit equipment continuously until the containment is removed. Smoke test the negative air pressure system for leaks at the beginning of each shift. The certified supervisor is responsible to continuously monitor and keep a pressure differential log with an automatic manometric recording instrument. Notify the Contracting Officer immediately if the pressure differential falls below the prescribed minimum. Submit the continuously monitored pressure differential log, as specified. Do not use the building ventilation system as the local exhaust system. Terminate the local exhaust system out of doors unless the Contracting Officer allows an alternate arrangement. All filters must be new at the beginning of the project and be periodically changed as necessary to maintain specified pressure differential and disposed of as lead, cadmium and chromium contaminated waste.

b. Discontinuing Negative Air Pressure System. Operate the negative air pressure system continuously during abatement activities unless otherwise authorized by the Contracting Officer. At the completion of the project, units must be run until full cleanup has been completed and final clearance testing requirements have been met. Dismantling of the negative air pressure systems must conform to written decontamination procedures be approved by the Contracting Officer and be as presented in the Lead, Cadmium, Chromium Compliance Plan. Seal the HEPA filter machine intakes with polyethylene to prevent environmental contamination.

3.1.1.7 Decontamination Shower Facility

Provide clean and contaminated change rooms and shower facilities in accordance with this specification and 29 CFR 1926.62, 29 CFR 1926.1126, 29 CFR 1926.1127.

3.1.1.8 Eye Wash Station

Provide suitable facilities within the work area for quick drenching or flushing of the eyes where eyes may be exposed to injurious corrosive materials.

3.1.1.9 Mechanical Ventilation System

a. Use adequate ventilation to control personnel exposure to lead, cadmium and chromium in accordance with 29 CFR 1926.62, 29 CFR 1926.1126, 29 CFR 1926.1127. To the extent feasible, use local

exhaust ventilation or other collection systems, approved by the CP. Evaluate and maintain local exhaust ventilation systems in accordance with 29 CFR 1926.62, 29 CFR 1926.1126, 29 CFR 1926.1127.

b. Vent local exhaust outside the building and away from building ventilation intakes or ensure system is connected to HEPA filters.

c. Use locally exhausted, power actuated tools or manual hand tools.

3.1.1.10 Personnel Protection

Personnel must wear and use protective clothing and equipment as specified herein. Eating, smoking, or drinking or application of cosmetics is not permitted in the lead, cadmium, chromium control area. No one will be permitted in the lead, cadmium, chromium control area unless they have been appropriately trained and provided with protective equipment.

3.2 ERECTION

3.2.1 Lead, Cadmium, Chromium Control Area Requirements

Establish a lead, cadmium, chromium control area by completely establishing barriers and physical boundaries around the area or structure where PWL or MCL removal operations will be performed.

Full containment - Contain removal operations by the use of critical barriers and HEPA filtered exhaust a negative pressure enclosure system with decontamination facilities and with HEPA filtered exhaust if required by the CP. For containment areas larger than 1,000 square feet install a minimum of two 18 inch square viewing ports. Locate ports to provide a view of the required work from the exterior of the enclosed contaminated area. Glaze ports with laminated safety glass.

3.3 APPLICATION

3.3.1 Lead, Cadmium, Chromium Work

Perform lead, cadmium, chromium work in accordance with approved Lead, Cadmium, Chromium Compliance Plan. Use procedures and equipment required to limit occupational exposure and environmental contamination with lead, cadmium, chromium when the work is performed in accordance with 29 CFR 1926.62, 29 CFR 1926.1126, 29 CFR 1926.1127 or 40 CFR 745, and as specified herein. Dispose of all PWL or MCL and associated waste in compliance with federal, State, and local requirements.

3.3.2 Paint with Lead, Cadmium, Chromium or Material Containing Lead, Cadmium, Chromium Removal

Manual or power sanding or grinding of lead, cadmium, chromium surfaces or materials is not permitted unless tools are equipped with HEPA attachments or wet methods. The dry sanding or grinding of surfaces that contain lead, cadmium, chromium is prohibited. Provide methodology for removing lead, cadmium, chromium in the Lead, Cadmium, Chromium Compliance Plan. Select lead, cadmium, chromium removal processes to minimize contamination of work areas outside the control area with lead, cadmium, chromium contaminated dust or other lead, cadmium, chromium contaminated debris or waste and to ensure that unprotected personnel are not exposed to hazardous concentrations of lead, cadmium, chromium. Describe this removal process in the Lead, Cadmium, Chromium Compliance Plan.

Avoid flash rusting or deterioration of the substrate. Provide surface preparations for painting in accordance with Section 09 90 00 PAINTS AND COATINGS.

Provide methodology for lead, cadmium and chromium, LBP/PWL removal and abatement/control and processes to minimize contamination of work areas outside the control area with lead, cadmium, chromium contaminated dust or other lead, cadmium, chromium contaminated debris/waste and to ensure that unprotected personnel are not exposed to hazardous concentrations of lead, cadmium, chromium. Describe this lead,, cadmium and chromium, LBP/PWL removal/control process in the Lead, Cadmium, Chromium Compliance Plan.

3.3.2.1 Paint with Lead, Cadmium, Chromium or Material Containing Lead, Cadmium, Chromium - Indoor Removal

Perform manual or mechanical removal and thermal cutting in the lead, cadmium, chromium control areas using enclosures, barriers or containments and powered locally exhausted tools equipped with HEPA filters. Collect residue and debris for disposal in accordance with federal, State, and local requirements.

3.3.2.2 Paint with Lead, Cadmium, Chromium or Material Containing Lead, Cadmium, Chromium - Outdoor Removal

Perform outdoor removal as indicated in federal, State, and local regulations and in the Lead, Cadmium, Chromium Compliance Plan. The worksite preparation (barriers or containments) must be job dependent and presented in the Lead, Cadmium, Chromium Compliance Plan.

3.3.3 Personnel Exiting Procedures

Whenever personnel exit the lead, cadmium, chromium controlled area, they must perform the following procedures and must not leave the work place wearing any clothing or equipment worn in the control area:

a. Vacuum all clothing before entering the contaminated change room.

b. Remove protective clothing in the contaminated change room, and place them in an approved impermeable disposal bag.

c. Shower.

c. Wash hands and face at the site, don appropriate disposable or uncontaminated reusable clothing, move to an appropriate shower facility, shower.

d. Change to clean clothes prior to leaving the clean clothes storage area.

3.4 FIELD QUALITY CONTROL

3.4.1 Tests

3.4.1.1 Air and Wipe Sampling

Conduct sampling for lead, cadmium, chromium in accordance with 29 CFR 1926.62, 29 CFR 1926.1126, 29 CFR 1926.1127 and as specified herein. Air and wipe sampling must be directed or performed by the CP.

a. The CP must be on the job site directing the air and wipe sampling and inspecting the PWL or MCL removal work to ensure that the requirements of the contract have been satisfied during the entire PWL or MCL operation.

b. Collect personal air samples on employees who are anticipated to have the greatest risk of exposure as determined by the CP. In addition, collect air samples on at least twenty-five percent of the work crew or a minimum of two employees, whichever is greater, during each work shift.

c. Submit results of air samples, signed by the CP, within 72-hours after the air samples are taken.

d. Conduct area air sampling daily, on each shift in which lead, cadmium and chromium and lead-based paint removal operations are performed, in areas immediately adjacent to the lead, cadmium and chromium control area. Conduct sufficient area monitoring to ensure unprotected personnel are not exposed at or above 30 micrograms of lead per cubic meter of air or 2.5 micrograms of cadmium/chromium per cubic meter of air. If 30 micrograms of lead per cubic meter of air or 2.5 micrograms of cadmium/chromium per cubic meter of air is reached or exceeded, stop work, correct the conditions(s) causing the increased levels. Notify the Contracting Officer immediately. Determine if condition(s) require any further change in work methods. Resume removal work only after the CP and the Contracting Officer give approval.

e. Before any work begins, a third party consultant must collect and analyze baseline wipe samples in accordance with methods defined by federal, State, and local standards inside and outside of the physical boundary to assess the degree of dust contamination in the facility prior to lead, cadmium and chromium disturbance or removal. Provide Initial Sample Results to the Contracting Officer before work begins.

f. Surface Wipe Samples - Collect surface wipe samples on floors at a location no greater than 10 feet outside the lead, cadmium, chromium control area at a frequency of once per day while lead, cadmium, chromium removal work is conducted in occupied buildings. Surface wipe samples or Micro Vacuum surface sample results must meet criteria in paragraph CLEARANCE CERTIFICATION.

3.4.1.2 Sampling After Removal

After the visual inspection, conduct soil sampling if bare soil is present during external removal operations and collect wipe and soil samples according to the HUD protocol contained in HUD 6780 to determine the lead, cadmium and chromium content of settled dust in micrograms per square meter foot of surface area and parts per million (ppm) for soil.

3.4.1.3 Testing of Material Containing Lead, Cadmium, Chromium Residue

Test residue in accordance with 40 CFR 261 for hazardous waste.

3.5 CLEANING AND DISPOSAL

3.5.1 Cleanup

Maintain surfaces of the lead, cadmium, chromium control area free of accumulations of dust and debris. Restrict the spread of dust and debris; keep waste from being distributed over the work area. Do not dry sweep or use pressurized air to clean up the area. At the end of each shift and when the lead, cadmium, chromium operation has been completed, clean the controlled area of all visible contamination by vacuuming with a HEPA filtered vacuum cleaner, wet mopping the area and wet wiping the area as indicated by the Lead, Cadmium, Chromium Compliance Plan. Reclean areas showing dust or debris. After visible dust and debris is removed, wet wipe and HEPA vacuum all surfaces in the controlled area. If adjacent areas become contaminated at any time during the work, clean, visually inspect, and then wipe sample all contaminated areas. The CP must then certify in writing that the area has been cleaned of lead, cadmium and chromium contamination before clearance testing.

3.5.1.1 Clearance Certification

The CP must certify in writing that air samples collected outside the lead, cadmium, chromium control area during paint removal operations are less than 30 micrograms of lead per cubic meter of airand less than 2.5 micrograms of cadmium/chromium per cubic meter of air; the respiratory protection used for the employees was adequate; the work procedures were performed in accordance with 29 CFR 1926.62, 29 CFR 1926.1126, 29 CFR 1926.1127; and that there were no visible accumulations of material and dust containing lead, cadmium, chromium left in the work site. Do not remove the lead, cadmium, chromium control area or roped off boundary and warning signs prior to the Contracting Officer's acknowledgement of receipt of the CP certification.

The third party consultant must certify surface wipe sample results collected inside and outside the work area are less than 40 micrograms of lead per square foot on floors, less than 250 micrograms of lead per square foot on interior window sills and less than 400 micrograms of lead per square foot on window troughs not significantly greater than the initial surface loading determined prior to work.

The third party consultant must certify surface wipe sample or Micro Vacuum surface sample results collected inside and outside the work area are less than 200 micrograms of lead per square foot on floors or horizontal surfaces. Micro Vacuum technique should be used on rough or porous surfaces which are difficult to achieve clearance by the wipe sampling methodology.

Certify surface wipe samples are not significantly greater than the initial surface loading determined prior to work.

Clear the lead, cadmium, chromium control area in industrial facilities of all visible dust and debris.

For exterior work, soil samples taken at the exterior of the work site must be used to determine if soil lead, cadmium, chromium levels have increased at a statistically significant level (significant at the 95 percent confidence limit) from the soil lead, cadmium, chromium levels prior to the operation. If soil lead, cadmium, chromium levels either show a statistically significant increase above soil lead, cadmium,

chromium levels prior to work or soil lead, cadmium, chromium levels above any applicable federal or state standard for lead, cadmium, chromium in soil, the soil must be remediated.

For lead, cadmium and chromium-based paint hazard abatement work, surface wipe and soil sampling must be conducted and clearance determinations made according to the work practice standards presented in 40 CFR 745.227.

3.5.2 Disposal

a. Dispose of material, whether hazardous or non-hazardous in accordance with all laws and provisions and all federal, State or local regulations. Ensure all waste is properly characterized. The result of each waste characterization (TCLP for RCRA materials) will dictate disposal requirements.

b. Contractor is responsible for segregation of waste. Collect lead, cadmium, chromium contaminated waste, scrap, debris, bags, containers, equipment, and lead, cadmium, chromiumcontaminated clothing that may produce airborne concentrations of lead, cadmium, chromium particles. Label the containers in accordance with 29 CFR 1926.62, 29 CFR 1926.1126, 29 CFR 1926.1127 and 40 CFR 261, 40 CFR 262 and corresponding state regulations.

c. Dispose of lead, cadmium, chromiumcontaminated material classified as hazardous waste at an EPA or Ohio approved hazardous waste treatment, storage, or disposal facility off Government property.

d. Accumulate waste materials in U.S. Department of Transportation (49 CFR 178) approved 55 gallon drums or appropriately sized container for smaller volumes. Properly label each drum to identify the type of hazardous material (49 CFR 172). For hazardous waste, the collection container requires marking/labeling in accordance with 40 CFR 262 and corresponding state regulations during the accumulation/collection timeframe. The Contracting Officer or an authorized representative will assign an area for accumulation of waste containers. Coordinate authorized accumulation volumes and time limits with the host installation environmental function.

e. Handle, store, transport, and dispose lead, cadmium, chromium or lead, cadmium, chromium contaminated waste in accordance with 40 CFR 260, 40 CFR 261, 40 CFR 262, 40 CFR 263, 40 CFR 264, and 40 CFR 265. Comply with land disposal restriction notification requirements as required by 40 CFR 268.

f. All lead, cadmium, and chromium waste generation, management,and disposal will be coordinated with the host installation environmental function.

3.5.2.1 Disposal Documentation

Coordinate all disposal or off-site shipments of lead, cadmium, and chromium waste with the host installation environmental function. Submit written evidence of TSD approval to demonstrate the hazardous waste treatment, storage, or disposal facility (TSD) is approved for lead, cadmium, chromium disposal by the EPA, State or local regulatory agencies. Submit one copy of the completed hazardous waste manifest, signed and dated by the initial transporter in accordance with 40 CFR 262. Provide a certificate that the waste was accepted by the disposal facility.

Provide turn-in documents or weight tickets for non-hazardous waste disposal.

3.5.2.2 Payment for Hazardous Waste

Payment for disposal of hazardous and non-hazardous waste will not be made until a signed copy of the manifest from the treatment or disposal facility is received and approved by the Contracting Officer. The manifest must detail and certify the amount of lead, cadmium, chromium containing materials or non-hazardous waste delivered to the treatment or disposal facility.

-- End of Section --

P2# 519087 - DSSC DLA Repair Building 27
Columbus, OH

SECTION 02 84 16

HANDLING OF LIGHTING BALLASTS AND LAMPS CONTAINING PCBs AND MERCURY
11/22

PART 1 GENERAL

1.1 REFERENCES

The publications listed below form a part of this specification to the extent referenced. The publications are referred to within the text by the basic designation only.

U.S. NATIONAL ARCHIVES AND RECORDS ADMINISTRATION (NARA)

29 CFR 1910.1000	Air Contaminants
40 CFR 260	Hazardous Waste Management System: General
40 CFR 261	Identification and Listing of Hazardous Waste
40 CFR 262	Standards Applicable to Generators of Hazardous Waste
40 CFR 263	Standards Applicable to Transporters of Hazardous Waste
40 CFR 264	Standards for Owners and Operators of Hazardous Waste Treatment, Storage, and Disposal Facilities
40 CFR 265	Interim Status Standards for Owners and Operators of Hazardous Waste Treatment, Storage, and Disposal Facilities
40 CFR 268	Land Disposal Restrictions
40 CFR 270	EPA Administered Permit Programs: The Hazardous Waste Permit Program
40 CFR 273	Standards for Universal Waste Management
40 CFR 761	Polychlorinated Biphenyls (PCBs) Manufacturing, Processing, Distribution in Commerce, and Use Prohibitions
49 CFR 178	Specifications for Packagings

1.2 REQUIREMENTS

Removal and disposal of PCB containing lighting ballasts and associated mercury-containing lamps. Contractor may encounter leaking PCB ballasts.

1.3 DEFINITIONS

1.3.1 Certified Industrial Hygienist (CIH)

A industrial hygienist hired by the contractor must be certified by the American Board of Industrial Hygiene.

1.3.2 Leak

Leak or leaking means any instance in which a PCB article, PCB container, or PCB equipment has any PCBs on any portion of its external surface.

1.3.3 Lamps

Lamp is defined as the bulb or tube portion of an electric lighting device. A lamp is specifically designed to produce radiant energy, most often in the ultraviolet, visible, and infra-red regions of the electromagnetic spectrum. Examples of common electric lamps include, but are not limited to, fluorescent, high intensity discharge, neon, mercury vapor, high pressure sodium, and metal halide lamps.

1.3.4 Polychlorinated Biphenyls (PCBs)

PCBs as used in this specification mean the same as PCBs, and all related items, as defined in 40 CFR 761, Section 3, Definitions.

1.3.5 Spill

Spill means both intentional and unintentional spills, leaks, and other uncontrolled discharges when the release results in any quantity of PCBs running off or about to run off the external surface of the equipment or other PCB source, as well as the contamination resulting from those releases.

1.3.6 Universal Waste

Universal Waste means any of the following hazardous wastes that are managed under the universal waste requirements 40 CFR 273:

(1) Batteries as described in Sec. 273.2 of this chapter;

(2) Pesticides as described in Sec. 273.3 of this chapter;

(3) Mercury containing equipment as described in Sec. 273.4 of this chapter; and

(4) Lamps as described in Sec. 273.5 of this chapter.

1.4 QUALITY ASSURANCE

1.4.1 Regulatory Requirements

Perform PCB related work in accordance with 40 CFR 761. Perform mercury-containing lamps storage and transport in accordance with 40 CFR 261, 40 CFR 264, 40 CFR 265, 40 CFR 273.

1.4.2 Training

Instruction and certification of training of all persons involved in the

removal of PCB containing lighting ballasts and mercury-containing lamps is the responsibility of the Certified Industrial Hygienist (CIH). Include in the instruction: The dangers of PCB and mercury exposure, decontamination, safe work practices, and applicable OSHA and EPA regulations. The CIH must review and approve the PCB and Mercury-Containing Lamp Removal Work Plans.

1.4.3 Regulation Documents

Maintain at all times one copy each at the office and one copy each in view at the job site of 29 CFR 1910.1000, 40 CFR 260, 40 CFR 261, 40 CFR 262, 40 CFR 263, 40 CFR 265, 40 CFR 268, 40 CFR 270, 40 CFR 273 and of the Contractor removal work plan and disposal plan for PCB and for associated mercury-containing lamps.

1.5 SUBMITTALS

Government approval is required for submittals with a "G" or "S" classification. Submittals not having a "G" or "S" classification are for information only. When used, a code following the "G" classification identifies the office that will review the submittal for the Government. Submit the following in accordance with Section 01 33 00 SUBMITTAL PROCEDURES:

SD-07 Certificates

Qualifications of CIH; G,

Training Certification; G,

PCB and Lamp Removal Work Plan; G,

PCB and Lamp Disposal Plan; G,

SD-11 Closeout Submittals

Transporter Certification of notification to EPA of their PCB waste activities and EPA ID numbers; G,

Certification of Decontamination

Certificate of Disposal and/or recycling. Submit to the Government before application for payment within 30 days of the date that the disposal of the PCB and mercury-containing lamp waste identified on the manifest was completed.

DD Form 1348-1

Testing Results

1.6 ENVIRONMENTAL REQUIREMENTS

Use special clothing:

a. Disposable gloves (polyethylene)

b. Eye protection

c. PPE as required by CIH

1.7 SCHEDULING

Notify the Contracting Officer 20 days prior to the start of PCB and mercury-containing lamp removal work.

1.8 QUALITY ASSURANCE

1.8.1 Qualifications of CIH

Submit the name, address, and telephone number of the Industrial Hygienist selected to perform the duties in paragraph CERTIFIED INDUSTRIAL HYGIENIST. Submit training certification that the Industrial Hygienist is certified, including certification number and date of certification or re certification.

1.8.2 PCB and Lamp Removal Work Plan

Submit a job-specific plan within 20 calendar days after award of contract of the work procedures to be used in the removal, packaging, and storage of PCB-containing lighting ballasts and associated mercury-containing lamps. Include in the plan: Requirements for Personal Protective Equipment (PPE), spill cleanup procedures and equipment, eating, smoking and restroom procedures. The plan must be approved and signed by the Certified Industrial Hygienist. Obtain approval of the plan by the Contracting Officer prior to the start of PCB and/or lamp removal work.

1.8.3 PCB and Lamp Disposal Plan

Submit a PCB and lamp Disposal Plan within 45calendar days after award of contract, complying with the applicable requirements of federal, state, and local PCB and Universal waste regulations and address:

a. Estimated quantities of wastes to be generated, disposed of, and recycled.

b. Names and qualifications of each Contractor that will be transporting, storing, treating, and disposing of the wastes. Include the facility location. Furnish two copies of EPA and state PCB and mercury-containing lamp waste permit applications and EPA identification numbers, as required.

c. Names and qualifications (experience and training) of personnel who will be working on-site with PCB and mercury-containing lamp wastes.

d. Spill prevention, containment, and cleanup contingency measures to be implemented.

e. Work plan and schedule for PCB and mercury-containing lamp waste removal, containment, storage, transportation, disposal and or recycling. Clean up and containerize wastes daily.

PART 2 PRODUCTS

Not used.

PART 3 EXECUTION

3.1 WORK PROCEDURE

Furnish labor, materials, services, and equipment necessary for the removal of PCB containing lighting ballasts, associated mercury-containing fluorescent lamps, and high intensity discharge (HID) lamps in accordance with local, state, or federal regulations. Do not expose PCBs to open flames or other high temperature sources since toxic decomposition by-products may be produced. Do not break mercury containing fluorescent lamps or high intensity discharge lamps.

3.1.1 Work Operations

Ensure that work operations or processes involving PCB or PCB-contaminated materials are conducted in accordance with 40 CFR 761, 40 CFR 262 40 CFR 263, and the applicable requirements of this section, including but not limited to:

a. Obtaining suitable PCB and mercury-containing lamp storage sites.

b. Notifying Contracting Officer prior to commencing the operation.

c. Reporting leaks and spills to the Contracting Officer.

d. Cleaning up spills.

e. Inspecting PCB and PCB-contaminated items and waste containers for leaks and forwarding copies of inspection reports to the Contracting Officer.

f. Maintaining inspection, inventory and spill records.

3.2 PCB SPILL CLEANUP REQUIREMENTS

3.2.1 PCB Spills

Immediately report to the Contracting Officer any PCB spills.

3.2.2 PCB Spill Control Area

Rope off an area around the edges of a PCB leak or spill and post a "PCB Spill Authorized Personnel Only" caution sign. Immediately transfer leaking items to a drip pan or other container.

3.2.3 PCB Spill Cleanup

40 CFR 761, subpart G. Initiate cleanup of spills as soon as possible, but no later than 24 hours of its discovery. Mop up the liquid with rags or other conventional absorbent. Properly contain and dispose of spent absorbent as solid PCB waste.

3.2.4 Records and Certification

Document the cleanup with records of decontamination in accordance with 40 CFR 761, Section 125, Requirements for PCB Spill Cleanup. Provide test results of cleanup and certification of decontamination.

3.3 REMOVAL

3.3.1 Ballasts

As ballast are removed from the lighting fixture, inspect label on ballast. Ballasts without a "No PCB" label must be assumed to contain PCBs and containerized and disposed of as required under paragraphs STORAGE FOR DISPOSAL and DISPOSAL. If there are less than 1600 "No PCB" labeled lighting ballasts, dispose of them as normal demolition debris. If there are more than 1600 "No PCB" labeled ballasts, establish whether the "No PCB" labeled ballasts contain diethylhexyl phthalate (DEHP) either by test or by checking with the ballast manufacturer indicated on the label. Submit testing results and/or written confirmation from the manufacturer to the Contracting Officer. If the ballasts do not contain DEHP, dispose of them as normal construction debris. If they do contain DEHP, dispose of them as hazardous material in accordance with Federal, State, and local regulations. As a basis of bid assume ballasts with "No PCB" labels do not contain DEHP and may disposed of as normal construction debris. If 1600 or more DEHP ballasts are disposed of in a 24 hour period, notify the National Response Team at 800-424-8802.

3.3.2 Lighting Lamps

Remove lighting tubes/lamps from the lighting fixture and carefully place (unbroken) into appropriate containers (original transport boxes or equivalent). In the event of a lighting tube/lamp breaking, sweep and place waste in double plastic taped bags and dispose of as universal waste as specified herein.

3.4 STORAGE FOR DISPOSAL

3.4.1 Storage Containers for PCBs

49 CFR 178. Store PCB in containers approved by DOT for PCB.

3.4.2 Storage Containers for lamps

Store mercury containing lamps in appropriate DOT containers. Store and label boxes for transport in accordance with 40 CFR 273.

3.4.3 Labeling of Waste Containers

Label with the following:

a. Date the item was placed in storage and the name of the cognizant activity/building.

b. "Caution Contains PCB," conforming to 40 CFR 761, CFR Subpart C. Affix labels to PCB waste containers.

c. Label mercury-containing lamp waste in accordance with 40 CFR 273. Affix labels to all lighting waste containers.

3.5 DISPOSAL

Dispose of off Government property in accordance with EPA, DOT, and local regulations at a permitted site.

3.5.1 Identification Number

Federal regulations 40 CFR 761, and 40 CFR 263 require that generators, transporters, commercial storers, and disposers of PCB waste posses U.S. EPA identification numbers. Verify that the activity has a U.S. EPA generator identification number for use on the Uniform Hazardous Waste manifest. If not, advise the activity that it must file and obtain an I.D. number with EPA prior to commencement of removal work. For mercury containing lamp removal, Federal regulations 40 CFR 273 require that large quantity handlers of Universal waste (LQHUW) must provide notification of universal waste management to the appropriate EPA Region (or state director in authorized states), obtain an EPA identification number, and retain for three years records of off-site shipments of universal waste. Verify that the activity has a U.S. EPA generator identification number for use on the Universal Waste manifest. If not, advise the activity that it must file and obtain an I.D. number with EPA prior to commencement of removal work.

3.5.2 Transporter Certification

Comply with disposal and transportation requirements outlined in 40 CFR 761 and 40 CFR 263. Before transporting the PCB waste, sign and date the manifest acknowledging acceptance of the PCB waste from the Government. Return a signed copy to the Government before leaving the job site. Ensure that the manifest accompanies the PCB waste at all times. Submit transporter certification of notification to EPA of their PCB waste activities (EPA Form 7710-53).

3.5.2.1 Certificate of Disposal and/or Recycling

40 CFR 761. Include in the certificate for the PCBs and PCB items disposed:

a. The identity of the disposal and or recycling facility, by name, address, and EPA identification number.

b. The identity of the PCB waste affected by the Certificate of Disposal including reference to the manifest number for the shipment.

c. A statement certifying the fact of disposal and or recycling of the identified PCB waste, including the date(s) of disposal, and identifying the disposal process used.

d. A certification as defined in 40 CFR 761.

3.5.3 Disposal by the Government

Comply with disposal and transportation requirements outlined in 40 CFR 761 and 40 CFR 263. Coordinate delivery of PCBs on-site with local Environmental for subsequent disposal on Defense Logistics Agency Disposition Services (DLA DS) contracts. If the primary site is filled to capacity, contact the Contracting Officer. The transport distance to any storage site will not exceed the distance between the project site and the DLA DS storage site at .

3.5.3.1 DeliveryGovernment Pick Up

Contact DLA DS at least 5 working days in advance to make arrangements for delivery of PCB to the storage site. Pick up of PCB waste by the

Government. Phone (614) 692-5900

or write to:

Defense Logistics Agency Disposition

DLA Land and Maritime, 3990 East Broad Street, Columbus, OH 43218-3990

3.5.3.2 DD Form 1348-1

Prepare DD Form 1348-1 Turn-in Document (TID), which will accompany the PCB to the storage site. Ensure that a responsible person from the activity that owns the PCB signs the DD Form 1348-1.

-- End of Section --

SECTION 03 30 00

CAST-IN-PLACE CONCRETE
02/19, CHG 9: 08/24

PART 1 GENERAL

1.1 REFERENCES

The publications listed below form a part of this specification to the extent referenced. The publications are referred to within the text by the basic designation only.

AMERICAN CONCRETE INSTITUTE (ACI)

ACI 117	(2010; R 2015) Specifications for Tolerances for Concrete Construction and Materials and Commentary
ACI 121R	(2008) Guide for Concrete Construction Quality Systems in Conformance with ISO 9001
ACI 301	(2020) Specifications for Structural Concrete
ACI 302.1R	(2015) Guide for Concrete Floor and Slab Construction
ACI 304.2R	(2017) Guide to Placing Concrete by Pumping Methods
ACI 304R	(2000; R 2009) Guide for Measuring, Mixing, Transporting, and Placing Concrete
ACI 305.1	(2014) Specification for Hot Weather Concreting
ACI 305R	(2020) Guide to Hot Weather Concreting
ACI 306.1	(1990; R 2002) Standard Specification for Cold Weather Concreting
ACI 306R	(2016) Guide to Cold Weather Concreting
ACI 308.1	(2023) Specification for Curing Concrete
ACI MNL-2	(2019; 11th Edition) ACI Manual of Concrete Inspection
ACI MNL-15	(2020) Field Reference Manual: Specifications for Concrete Construction ACI 301-20 with Selected ACI References

AMERICAN WELDING SOCIETY (AWS)

AWS D1.4/D1.4M	(2018) Structural Welding Code - Reinforcing Steel

ASTM INTERNATIONAL (ASTM)

ASTM A53/A53M	(2024) Standard Specification for Pipe, Steel, Black and Hot-Dipped, Zinc-Coated, Welded and Seamless
ASTM A615/A615M	(2024) Standard Specification for Deformed and Plain Carbon-Steel Bars for Concrete Reinforcement
ASTM A706/A706M	(2024) Standard Specification for Low-Alloy Steel Deformed and Plain Bars for Concrete Reinforcement
ASTM A780/A780M	(2020) Standard Practice for Repair of Damaged and Uncoated Areas of Hot-Dip Galvanized Coatings
ASTM A884/A884M	(2019; Errata 1) Standard Specification for Epoxy-Coated Steel Wire and Welded Wire Reinforcement
ASTM A934/A934M	(2022) Standard Specification for Epoxy-Coated Prefabricated Steel Reinforcing Bars
ASTM A1022/A1022M	(2016b) Standard Specification for Deformed and Plain Stainless Steel Wire and Welded Wire for Concrete Reinforcement
ASTM A1044/A1044M	(2016a; Errata 1) Standard Specification for Steel Stud Assemblies for Shear Reinforcement of Concrete
ASTM A1060/A1060M	(2016b) Standard Specification for Zinc-Coated (Galvanized) Steel Welded Wire Reinforcement, Plain and Deformed, for Concrete
ASTM A1064/A1064M	(2024) Standard Specification for Carbon-Steel Wire and Welded Wire Reinforcement, Plain and Deformed, for Concrete
ASTM C31/C31M	(2024b) Standard Practice for Making and Curing Concrete Test Specimens in the Field
ASTM C33/C33M	(2024) Standard Specification for Concrete Aggregates
ASTM C39/C39M	(2024) Standard Test Method for Compressive Strength of Cylindrical Concrete Specimens
ASTM C42/C42M	(2020) Standard Test Method for Obtaining and Testing Drilled Cores and Sawed Beams of Concrete

ASTM C78/C78M	(2022) Standard Test Method for Flexural Strength of Concrete (Using Simple Beam with Third-Point Loading)
ASTM C94/C94M	(2024c) Standard Specification for Ready-Mixed Concrete
ASTM C136/C136M	(2019) Standard Test Method for Sieve Analysis of Fine and Coarse Aggregates
ASTM C143/C143M	(2020) Standard Test Method for Slump of Hydraulic-Cement Concrete
ASTM C150/C150M	(2024) Standard Specification for Portland Cement
ASTM C172/C172M	(2017) Standard Practice for Sampling Freshly Mixed Concrete
ASTM C173/C173M	(2024a) Standard Test Method for Air Content of Freshly Mixed Concrete by the Volumetric Method
ASTM C231/C231M	(2024) Standard Test Method for Air Content of Freshly Mixed Concrete by the Pressure Method
ASTM C260/C260M	(2010a; R 2016) Standard Specification for Air-Entraining Admixtures for Concrete
ASTM C311/C311M	(2024) Standard Test Methods for Sampling and Testing Fly Ash or Natural Pozzolans for Use in Portland-Cement Concrete
ASTM C330/C330M	(2017a) Standard Specification for Lightweight Aggregates for Structural Concrete
ASTM C494/C494M	(2024) Standard Specification for Chemical Admixtures for Concrete
ASTM C595/C595M	(2024) Standard Specification for Blended Hydraulic Cements
ASTM C618	(2023; E 2023) Standard Specification for Coal Fly Ash and Raw or Calcined Natural Pozzolan for Use in Concrete
ASTM C803/C803M	(2023) Standard Test Method for Penetration Resistance of Hardened Concrete
ASTM C845/C845M	(2018) Standard Specification for Expansive Hydraulic Cement
ASTM C873/C873M	(2015) Standard Test Method for Compressive Strength of Concrete Cylinders Cast in Place in Cylindrical Molds
ASTM C900	(2015) Standard Test Method for Pullout

	Strength of Hardened Concrete
ASTM C920	(2018) Standard Specification for Elastomeric Joint Sealants
ASTM C989/C989M	(2024) Standard Specification for Slag Cement for Use in Concrete and Mortars
ASTM C1012/C1012M	(2024) Standard Test Method for Length Change of Hydraulic-Cement Mortars Exposed to a Sulfate Solution
ASTM C1074	(2019; E 2021) Standard Practice for Estimating Concrete Strength by the Maturity Method
ASTM C1077	(2024) Standard Practice for Agencies Testing Concrete and Concrete Aggregates for Use in Construction and Criteria for Testing Agency Evaluation
ASTM C1107/C1107M	(2020) Standard Specification for Packaged Dry, Hydraulic-Cement Grout (Nonshrink)
ASTM C1157/C1157M	(2023) Standard Performance Specification for Hydraulic Cement
ASTM C1218/C1218M	(2020c) Standard Test Method for Water-Soluble Chloride in Mortar and Concrete
ASTM C1240	(2020) Standard Specification for Silica Fume Used in Cementitious Mixtures
ASTM C1260	(2023) Standard Test Method for Potential Alkali Reactivity of Aggregates (Mortar-Bar Method)
ASTM C1293	(2008; R 2015) Standard Test Method for Determination of Length Change of Concrete Due to Alkali-Silica Reaction
ASTM C1567	(2023) Standard Test Method for Potential Alkali-Silica Reactivity of Combinations of Cementitious Materials and Aggregate (Accelerated Mortar-Bar Method)
ASTM C1602/C1602M	(2022) Standard Specification for Mixing Water Used in Production of Hydraulic Cement Concrete
ASTM D1751	(2018) Standard Specification for Preformed Expansion Joint Filler for Concrete Paving and Structural Construction (Nonextruding and Resilient Bituminous Types)
ASTM D1752	(2018) Standard Specification for Preformed Sponge Rubber, Cork and Recycled

	PVC Expansion Joint Fillers for Concrete Paving and Structural Construction
ASTM D2628	(1991; R 2016) Standard Specification for Preformed Polychloroprene Elastomeric Joint Seals for Concrete Pavements
ASTM D2835	(1989; R 2017) Standard Specification for Lubricant for Installation of Preformed Compression Seals in Concrete Pavements
ASTM D5759	(2012; R 2020) Characterization of Coal Fly Ash and Clean Coal Combustion Fly Ash for Potential Uses
ASTM D6690	(2021) Standard Specification for Joint and Crack Sealants, Hot Applied, for Concrete and Asphalt Pavements
ASTM E96/E96M	(2024) Standard Test Methods for Gravimetric Determination of Water Vapor Transmission Rate of Materials
ASTM E329	(2023) Standard Specification for Agencies Engaged in Construction Inspection, Testing, or Special Inspection
ASTM E1155	(2020) Standard Test Method for Determining Floor Flatness and Floor Levelness Numbers
ASTM E1643	(2018a) Standard Practice for Selection, Design, Installation, and Inspection of Water Vapor Retarders Used in Contact with Earth or Granular Fill Under Concrete Slabs
ASTM E1745	(2017; R 2023) Standard Specification for Water Vapor Retarders Used in Contact with Soil or Granular Fill under Concrete Slabs

COMPOSITE PANEL ASSOCIATION (CPA)

ANSI/CPA A135.4	(2012; R2020) Basic Hardboard

CONCRETE REINFORCING STEEL INSTITUTE (CRSI)

CRSI 10MSP	(2018; Errata 2019) Manual of Standard Practice
CRSI RB4.1	(2016) Supports for Reinforcement Used in Concrete

NATIONAL INSTITUTE OF STANDARDS AND TECHNOLOGY (NIST)

NIST PS 1	(2009) DOC Voluntary Product Standard PS 1-07, Structural Plywood

U.S. ARMY CORPS OF ENGINEERS (USACE)

COE CRD-C 104	(1980) Method of Calculation of the Fineness Modulus of Aggregate

U.S. GENERAL SERVICES ADMINISTRATION (GSA)

FS SS-S-200	(Rev E; Notice 1; Notice 2) Sealant, Joint, Two-Component, Jet-Blast-Resistant, Cold-Applied, for Portland Cement Concrete Pavement

1.2 DEFINITIONS

a. "Cementitious material" as used herein includes all portland cement, pozzolan, fly ash, slag cement, and silica fume.

b. "Exposed to public view" means situated so that it can be seen from eye level from a public location after completion of the building. A public location is accessible to persons not responsible for operation or maintenance of the building.

c. "Chemical admixtures" are materials in the form of powder or fluids that are added to the concrete to give it certain characteristics not obtainable with plain concrete mixes.

d. "Supplementary cementing materials" (SCM) include coal fly ash, silica fume, slag cement, natural or calcined pozzolans, and ultra-fine coal ash when used in such proportions to replace the portland cement that result in improvement to sustainability and durability and reduced cost.

e. "Design strength" (f'c) is the specified compressive strength of concrete at time(s) specified in this section to meet structural design criteria.

f. "Mass Concrete" is any concrete system that approaches a maximum temperature of 158 degrees F within the first 72 hours of placement. In addition, it includes all concrete elements with a section thickness of 3 feet or more regardless of temperature.

g. "Mixture proportioning" is the process of designing concrete mixture proportions to enable it to meet the strength, service life and constructability requirements of the project while minimizing the initial and life-cycle cost.

h. "Mixture proportions" are the masses or volumes of individual ingredients used to make a unit measure (cubic meter or cubic yard) of concrete.

i. "Pozzolan" is a siliceous or siliceous and aluminous material, which in itself possesses little or no cementitious value but will, in finely divided form and in the presence of moisture, chemically react with calcium hydroxide at ordinary temperatures to form compounds possessing cementitious properties.

j. "Workability (or consistence)" is the ability of a fresh (plastic) concrete mix to fill the form/mould properly with the desired work (vibration) and without reducing the concrete's quality. Workability

depends on water content, chemical admixtures, aggregate (shape and size distribution), cementitious content and age (level of hydration).

1.3 SUBMITTALS

Government approval is required for submittals with a "G" or "S" classification. Submittals not having a "G" or "S" classification are for Contractor Quality Control approval. Submittals not having a "G" or "S" classification are for information only. When used, a code following the "G" classification identifies the office that will review the submittal for the Government. Submit the following in accordance with Section 01 33 00 SUBMITTAL PROCEDURES:

SD-01 Preconstruction Submittals

Concrete Curing Plan

Quality Control Organizational Chart

Laboratory Accreditation; G

Maturity Method Data

SD-02 Shop Drawings

Formwork

Reinforcing Steel; G

SD-03 Product Data

Joint Sealants; S

Joint Filler; S

Formwork Materials

Recycled Aggregate Materials; S

Cementitious Materials; S

Vapor Retarder and Vapor Barrier

Concrete Curing Materials

Reinforcement; S

Liquid Chemical Floor Hardeners and Sealers

Admixtures

Mechanical Reinforcing Bar Connectors

Waterstops

Local/Regional Materials; S

Biodegradable Form Release Agent

Pumping Concrete

Finishing Plan

Nonshrink Grout

SD-04 Samples

Slab Finish Sample

Surface Finish Samples

SD-05 Design Data

Concrete Mix Design; G

SD-06 Test Reports

Concrete Mix Design; G

Fly Ash

Pozzolan

Slag Cement

Aggregates

Tolerance Report

Compressive Strength Tests; G

Air Content

Slump Tests

Water

SD-07 Certificates

Reinforcing Bars

Welder Qualifications

Safety Data Sheets

Field Testing Technician and Testing Agency

SD-08 Manufacturer's Instructions

Liquid Chemical Floor Hardeners and Sealers

Joint Sealants; S

1.4 MODIFICATION OF REFERENCES

Accomplish work in accordance with ACI publications except as modified herein. Consider the advisory or recommended provisions to be mandatory. Interpret reference to the "Building Official," the "Structural Engineer,"

and the "Architect/Engineer" to mean the Contracting Officer.

1.5 DELIVERY, STORAGE, AND HANDLING

Follow ACI 301, ACI 304R and ASTM A934/A934M requirements and recommendations. Do not deliver concrete until vapor retarder, vapor barrier, forms, reinforcement, embedded items, and chamfer strips are in place and ready for concrete placement. Do not store concrete curing compounds or sealers with materials that have a high capacity to adsorb volatile organic compound (VOC) emissions. Do not store concrete curing compounds or sealers in occupied spaces.

1.5.1 Reinforcement

Store reinforcement of different sizes and shapes in separate piles or racks raised above the ground to avoid excessive rusting. Protect from contaminants such as grease, oil, and dirt. Ensure bar sizes can be accurately identified after bundles are broken and tags removed.

1.6 QUALITY ASSURANCE

1.6.1 Design Data

1.6.1.1 Concrete Mix Design

Sixty days minimum prior to concrete placement, submit a mix design for each strength and type of concrete. Submit all documentation required in ACI 301 Section 4 and as specified in this section. Submit a complete list of materials including type; brand; source and amount of cement, supplementary cementitious materials, and admixtures; and applicable reference specifications. Submit mill test and all other test for cement, supplementary cementitious materials, aggregates, and admixtures. Provide documentation of maximum nominal aggregate size, gradation analysis, percentage retained and passing sieve, and a graph of percentage retained verses sieve size. Provide mix proportion data using at least three different water-cementitious material ratios for each type of mixture, which produce a range of strength encompassing those required for each type of concrete required. If source material changes, resubmit mix proportion data using revised source material. Provide only materials that have been proven by trial mix studies to meet the requirements of this specification, unless otherwise approved in writing by the Contracting Officer. Indicate clearly in the submittal where each mix design is used when more than one mix design is submitted. Resubmit data on concrete components if the qualities or source of components changes. Required average strength can be documented by field experience if field strength test data are available and represent a single group of at least 10 consecutive strength tests for one mixture, using materials and conditions similar to those expected for work, and encompassing a period of not less than 45 days. The average of field strength tests must equal or exceed fcr'. Changes in materials, conditions, and proportions within the test record must not have been more closely restricted than those for the proposed work. Test records must not be more than 24 months old. Obtain mix design approval from the contracting officer prior to concrete placement.

1.6.2 Shop Drawings

1.6.2.1 Formwork

Drawings showing details of formwork including, but not limited to; joints, supports, studding and shoring, and sequence of form and shoring removal. Indicate placement schedule, construction, location and method of forming control joints. Include locations of inserts, conduit, sleeves and other embedded items. Reproductions of contract drawings are unacceptable. Submit form removal schedule indicating element and minimum length of time for form removal.

Design, fabricate, erect, support, brace, and maintain formwork so that it is able to support, without failure, all vertical and lateral loads that may reasonably be anticipated to be applied to the formwork.

1.6.2.2 Reinforcing Steel

Indicate bending diagrams, assembly diagrams, splicing and laps of bars, shapes, dimensions, and details of bar reinforcing, accessories, and concrete cover. Do not scale dimensions from structural drawings to determine lengths of reinforcing bars. Reproductions of contract drawings are unacceptable.

1.6.3 Control Submittals

1.6.3.1 Concrete Curing Plan

Submit proposed materials, methods and duration for curing concrete elements in accordance with ACI 308.1.

1.6.3.2 Pumping Concrete

Submit proposed materials and methods for pumping concrete. Include mix designs, pumping equipment including type of pump and size and material for pipe, and maximum length and height concrete is to be pumped.

1.6.3.3 Silica Fume Manufacturer's Representative

The manufacturer's representative must be present at mix plant to ensure proper mix, including high range water reducer, and batching methods during the first 3 days of concrete mix preparation and placement. After which the manufacturer's representative must designate a representative at the concrete producer's plant to ensure the concrete mix procedures meet the silica fume manufacturer's recommendations. Representative to attend and advise at finishing of sample slab.

1.6.3.4 Finishing Plan

Submit proposed material and procedures to be used in obtaining the finish for the floors. Include qualification of person to be used for obtaining floor tolerance measurement, description of measuring equipment to be used, and a sketch showing lines and locations the measuring equipment will follow.

1.6.3.5 VOC Content for form release agents, curing compounds, and concrete penetrating sealers

Submit certification for the form release agent, curing compounds, and

concrete penetrating sealers that indicate the VOC content of each product.

1.6.3.6 Safety Data Sheets

Submit Safety Data Sheets (SDS) for all materials that are regulated for hazardous health effects. SDS must be readily accessible during each work shift to employees when they are at the construction site.

1.6.4 Test Reports

1.6.4.1 Fly Ash and Pozzolan

Submit test results in accordance with ASTM C618 for fly ash and pozzolan. Submit test results performed within 6 months of submittal date.

1.6.4.2 Slag Cement

Submit test results in accordance with ASTM C989/C989M for slag cement. Submit test results performed within 6 months of submittal date.

1.6.4.3 Aggregates

Submit test results in accordance with ASTM C33/C33M, or ASTM C330/C330M for lightweight aggregate, and ASTM C1293 or ASTM C1567 as required in the paragraph titled ALKALI-AGGREGATE REACTION.

1.6.5 Quality Control Program

Develop and submit for approval a concrete quality control program in accordance with the guidelines of ACI 121R and as specified herein. Include approved laboratories. Provide direct oversight for the concrete qualification program inclusive of associated sampling and testing. Provide all quality control reports to the Contracting Officer, Quality Manager and Concrete Supplier. Maintain a copy of ACI MNL-15 and CRSI 10MSP at project site.

1.6.6 Quality Control Personnel Certifications

Submit for approval the responsibilities of the various quality control personnel, including the names and qualifications of the individuals in those positions and a quality control organizational chart defining the quality control hierarchy and the responsibility of the various positions. Quality control personnel must be employed by the Contractor.

Submit American Concrete Institute certification for the following:

a. CQC personnel responsible for inspection of concrete operations.

b. Lead Foreman or Journeyman of the Concrete Placing, Finishing, and Curing Crews.

c. Field Testing Technicians: ACI Concrete Field Testing Technician, Grade I.

1.6.6.1 Quality Manager Qualifications

Holds a current license as a professional engineer in a U.S. state or territory with experience on at least five similar projects. Evidence of extraordinary proven experience may be considered by the Contracting

Officer as sufficient to act as the Quality Manager.

1.6.6.2 Field Testing Technician and Testing Agency

Submit data on qualifications of proposed testing agency and technicians for approval by the Contracting Officer prior to performing testing on concrete.

a. Work on concrete under this contract must be performed by an ACI Concrete Field Testing Technician Grade 1 qualified in accordance with ACI MNL-2 or equivalent. Equivalent certification programs must include requirements for written and performance examinations as stipulated in ACI MNL-2.

b. Testing agencies that perform testing services on reinforcing steel must meet the requirements of ASTM E329.

c. Testing agencies that perform testing services on concrete materials must meet the requirements of ASTM C1077.

1.6.7 Laboratory Qualifications for Concrete Qualification Testing

The concrete testing laboratory must have the necessary equipment and experience to accomplish required testing. The laboratory must meet the requirements of ASTM C1077 and be Cement and Concrete Reference Laboratory (CCRL) inspected.

1.6.8 Laboratory Accreditation

Laboratory and testing facilities are provided by and at the expense of the Contractor. The laboratories performing the tests must be accredited in accordance with ASTM C1077, including ASTM C78/C78M and ASTM C1260. The accreditation must be current and must include the required test methods, as specified. Furthermore, comply with the following requirements:

a. Aggregate Testing and Mix Proportioning: Studies performed by an accredited laboratory and under the direction of a registered professional engineer in a U.S. state or territory competent in concrete materials who is competent in concrete materials and must sign all reports and designs.

b. Acceptance Testing: Furnish all materials, labor, and facilities required for molding, curing, testing, and protecting test specimens at the site and in the laboratory. Furnish and maintain boxes or other facilities suitable for storing and curing the specimens at the site while in the mold within the temperature range stipulated by ASTM C31/C31M.

c. Contractor Quality Control: All sampling and testing must be performed by an approved, onsite, independent, accredited laboratory.

1.7 ENVIRONMENTAL REQUIREMENTS

Provide space ventilation according to material manufacturer recommendations, at a minimum, during and following installation of concrete curing compound and sealer. Maintain one of the following ventilation conditions during the curing period or for 72 hours after installation:

a. Supply 100 percent outside air 24 hours a day.

b. Supply airflow at a rate of 6 air changes per hour, when outside temperatures are between 55 degrees F and 84 degrees F and humidity is between 30 percent and 60 percent.

c. Supply airflow at a rate of 1.5 air changes per hour, when outside air conditions are not within the range stipulated above.

1.7.1 Submittals for Environmental Performance

a. Provide data indication the percentage of post-industrial pozzolan (fly ash, slag cement) cement substitution as a percentage of the full product composite by weight.

b. Provide data indicating the percentage of post-industrial and post-consumer recycled content aggregate.

c. Provide product data indicating the percentage of post-consumer recycled steel content in each type of steel reinforcement as a percentage of the full product composite by weight.

d. Provide product data stating the location where all products were manufactured

f. For projects using reusable formwork, provide data showing how formwork is reused.

g. Provide SDS product information data showing that form release agents meet any environmental performance goals such as using vegetable and soy based products.

h. Provide SDS product information data showing that concrete adhesives meet any environmental performance goals including low emitting, low volatile organic compound products.

1.8 SUSTAINABLE DESIGN REQUIREMENTS

1.8.1 Local/Regional Materials

Use materials or products extracted, harvested, or recovered, as well as manufactured, within a 500 mile radius from the project site, if available from a minimum of three sources.

1.9 QUALIFICATIONS FOR WELDING WORK

Welding procedures must be in accordance with AWS D1.4/D1.4M.

Verify that Welder qualifications are in accordance with AWS D1.4/D1.4M for welding of reinforcement or under an equivalent qualification test approved in advance. Welders are permitted to do only the type of welding for which each is specifically qualified.

PART 2 PRODUCTS

2.1 FORMWORK MATERIALS

a. Form-facing material in contact with concrete must be lumber, plywood.

Submit product information on proposed form-facing materials if different from that specified herein.

d. Design formwork to withstand pressure resulting from placement and vibration of concrete and to maintain specified tolerances.

e. Design formwork to accommodate waterstop materials in joints at locations indicated in Contract Documents.

f. Provide temporary openings in formwork if needed to facilitate cleaning and inspection.

g. Design formwork joints to inhibit leakage of mortar.

h. Limit deflection of facing materials for concrete surfaces exposed to view to 1/400 of center-to-center spacing of facing supports.

i. Do not use earth cuts as forms for vertical or sloping surfaces.

n. Submit manufacturer's product data on form liner proposed for use with each formed surface.

2.1.1 Wood Forms

Use lumber as specified in Section 06 10 00 ROUGH CARPENTRY and as follows. Provide lumber that is square edged or tongue-and-groove boards, free of raised grain, knotholes, or other surface defects. Provide plywood that complies with NIST PS 1, B-B concrete form panels or better or ANSI/CPA A135.4, hardboard for smooth form lining.

2.1.1.1 Concrete Form Plywood (Standard Rough)

Provide plywood that conforms to NIST PS 1, B-B, concrete form, not less than 5/8-inch thick.

2.1.1.2 Overlaid Concrete Form Plywood (Standard Smooth)

Provide plywood that conforms to NIST PS 1, B-B, high density form overlay, not less than 5/8-inch thick.

2.1.2 Carton Forms

Moisture resistant treated paper faces, biodegradable, structurally sufficient to support weight of wet concrete until initial set. Provide carton forms that contain a minimum of 10 percent post-consumer recycled content, or a minimum of 20 percent post-industrial recycled content.

2.1.3 Steel Forms

Provide steel form surfaces that do not contain irregularities, dents, or sags.

2.2 FORMWORK ACCESSORIES

a. Use commercially manufactured formwork accessories, including ties and hangers.

b. Form ties and accessories must not reduce the effective cover of the reinforcement.

2.2.1 Biodegradable Form Release Agent

a. Provide form release agent that is colorless, biodegradable, and water-based, with a low VOC content.

b. Provide product that does not bond with, stain, or adversely affect concrete surfaces and does not impair subsequent treatments of concrete surfaces.

c. Provide form release agent that reduces formwork moisture absorption, and does not contain diesel fuel, petroleum-based lubricating oils, waxes, or kerosene. Submit documentation indicating type of biobased material in product and biobased content. Indicate relative dollar value of biobased content products to total dollar value of products included in project.

d. Submit manufacturer's product data on formwork release agent for use on each form-facing material.

2.2.2 Chamfer Materials

Use lumber materials with dimensions of 3/4 x 3/4 in.

2.2.3 Construction and Movement Joints

a. Submit details and locations of construction joints in accordance with the requirements herein.

b. Locate construction joints within middle one-third of spans of slabs, beams, and girders. If a beam intersects a girder within the middle one-third of girder span, the distance between the construction joint in the girder and the edge of the beam must be at least twice the width of the larger member.

c. For members with post-tensioning tendons, locate construction joints where tendons pass through centroid of concrete section.

d. Locate construction joints in walls and columns at underside of slabs, beams, or girders and at tops of footings or slabs.

e. Make construction joints perpendicular to main reinforcement.

f. Provide movement joints where indicated in Contract Documents or in accepted alternate locations.

g. Submit location and detail of movement joints if different from those indicated in Contract Documents.

h. Submit manufacturer's data sheet on expansion joint materials.

i. Provide keyways where indicated in Contract Documents. Longitudinal keyways indicated in Contract Documents must be at least 1-1/2 in. deep, measured perpendicular to the plane of the joint.

2.2.4 Other Embedded items

Use sleeves, inserts, anchors, and other embedded items of material and design indicated in Contract Documents.

2.3 CONCRETE MATERIALS

2.3.1 Cementitious Materials

2.3.1.1 Portland Cement

a. Unless otherwise specified, provide cement that conforms to ASTM C150/C150M Type I.

b. Use one brand and type of cement for formed concrete having exposed-to-view finished surfaces.

d. Submit information along with evidence demonstrating compliance with referenced standards. Include types of cementitious materials, manufacturing locations, shipping locations, and certificates showing compliance.

e. Store cementitious materials and keep dry and free from contaminants.

2.3.1.2 Blended Cementsa. Conform to ASTM C595/C595M Type IP IS I IL or

b. Slag cement added to the Type IS or Type IT blended cements must meet ASTM C989/C989M.

c. The pozzolan added to the Type IP or Type IT blended cements must meet ASTM C618 Class F, and interground with the cement clinker. The manufacturer must state in writing that the amount of pozzolan in the finished cement will not vary more than plus or minus 5 mass percent of the finished cement from lot-to-lot or within a lot. The percentage and type of pozzolan used in the blend must not change from that submitted for the aggregate evaluation and mixture proportioning.

2.3.1.3 Fly Ash

a. ASTM C618, Class F.

b. If fly ash is used it must range from 15 to 20 percent by weight of cementitious material, provided the fly ash does not reduce the amount of cement in the concrete mix below the minimum requirements of local building codes. Do not use fly ash when it cannot meet the minimum level. Report the chemical analysis of the fly ash in accordance with ASTM C311/C311M. Evaluate and classify fly ash in accordance with ASTM D5759.

2.3.1.4 Slag Cement

ASTM C989/C989M, Grade 100 120.

2.3.1.5 Silica Fume

Silica fume must conform to ASTM C1240, including the optional limits on reactivity with cement alkalis. Silica fume may be furnished as a dry, densified material or as slurry. Proper mixing is essential to accomplish proper distribution of the silica fume and avoid agglomerated silica fume which can react with the alkali in the cement resulting in premature and extensive concrete damage. Supervision at the batch plant, finishing, and curing is essential. Provide at the Contractor's expense the services of a manufacturer's technical representative, experienced in mixing,

proportioning, placement procedures, and curing of concrete containing silica fume. This representative must be present on the project prior to and during at least the first 4 days of concrete production and placement using silica fume. Use a High Range Water Reducing admixture (HRWRA) when silica fume is the only pozzolan used.

2.3.1.6 Other Supplementary Cementitious Materials

Natural pozzolan must be raw or calcined and conform to ASTM C618, Class N, including the optional requirement for uniformity.

Ultra Fine Fly Ash (UFFA) and Ultra Fine Pozzolan (UFP) must conform to ASTM C618, Class F or N, and the following additional requirements:

a. The strength activity index at 28 days of age at least 95 percent of the control specimens.

b. The average particle size not exceed 6 microns.

c. The sum of SiO_2 plus Al_2O_3 plus Fe_2O_3 greater than 77 percent.2.3.2 Water

a. Water or ice must comply with the requirements of ASTM C1602/C1602M.

b. Minimize the amount of water in the mix. Improve workability by adjusting the grading of the aggregate and using admixture rather than by adding water.

c. Provide water potable; free from injurious amounts of oils, acids, alkalis, salts, organic materials, or other substances deleterious to concrete.

d. Protect mixing water and ice from contamination during storage and delivery.

e. Submit test report showing water complies with ASTM C1602/C1602M.

2.3.3 Aggregate

2.3.3.1 Normal-Weight Aggregate

a. Conform to ASTM C33/C33M.

b. Obtain aggregates used in concrete from the same sources and have the same size range as aggregates used in concrete represented by submitted field test records or used in trial mixtures.

d. Store and handle aggregate in a manner that will avoid segregation and prevents contamination by other materials or other sizes of aggregates. Store aggregates in locations that will permit them to drain freely. Do not use aggregates that contain frozen lumps.

e. Submit types, pit or quarry locations, producers' names, aggregate supplier statement of compliance with ASTM C33/C33M, and ASTM C1293 expansion data not more than 18 months old.

2.3.4 Admixtures

a. Chemical admixtures must conform to ASTM C494/C494M.

b. Air-entraining admixtures must conform to ASTM C260/C260M.

c. Do not use calcium chloride admixtures.

f. Admixtures used in concrete must be the same as those used in the concrete represented by submitted field test records or used in trial mixtures.

g. Protect stored admixtures against contamination, evaporation, or damage.

h. To ensure uniform distribution of constituents, provide agitating equipment for admixtures used in the form of suspensions or unstable solutions. Protect liquid admixtures from freezing and from temperature changes that would adversely affect their characteristics.

i. Submit types, brand names, producers' names, manufacturer's technical data sheets, and certificates showing compliance with standards required herein.

2.4 MISCELLANEOUS MATERIALS

2.4.1 Concrete Curing Materials

Provide concrete curing material in accordance with ACI 301 Section 5 and ACI 308.1 Section 2. Submit product data for concrete curing compounds. Submit manufactures instructions for placement of curing compound.

2.4.2 Nonshrink Grout

Nonshrink grout in accordance with ASTM C1107/C1107M.

2.4.3 Floor Finish Materials

2.4.3.1 Liquid Chemical Floor Hardeners and Sealers

a. Hardener must be a colorless aqueous solution containing a blend of inorganic silicate or siliconate material and proprietary components combined with a wetting agent; that penetrates, hardens, and densifies concrete surfaces. Submit manufactures instructions for placement of liquid chemical floor hardener.

b. Use concrete penetrating sealers with a low (maximum 100 grams/liter, less water and less exempt compounds) VOC content. Submit manufactures instructions for placement of sealers.

2.4.4 Expansion/Contraction Joint Filler

ASTM D1751 or ASTM D1752 Type I or Type II. Provide material 1/2 inch thick.

2.4.5 Joint Sealants

2.4.5.1 Horizontal Surfaces, 3 Percent Slope, Maximum

ASTM D6690 or ASTM C920, Type M, Class 25, Use T.

2.4.5.2 Vertical Surfaces Greater Than 3 Percent Slope

ASTM C920, Type M, Grade NS, Class 25, Use T. FS SS-S-200, no sag.

2.4.5.3 Preformed Polychloroprene Elastomeric Type

ASTM D2628.

2.4.5.4 Lubricant for Preformed Compression Seals

ASTM D2835.

2.4.6 Vapor Retarder

ASTM E1745 Class A polyethylene sheeting, minimum 15 mil thickness or other equivalent material with a maximum permeance rating of 0.04 perms per ASTM E96/E96M.

2.5 CONCRETE MIX DESIGN

2.5.1 Properties and Requirements

a. Use materials and material combinations listed in this section and the contract documents.

b. Cementitious material content must be adequate for concrete to satisfy the specified requirements for strength, w/cm, durability, and finishability described in this section and the contract documents.

The minimum cementitious material content for concrete used in floors must meet the following requirements:

Nominal maximum size of aggregate, in.	**Minimum cementitious material content, pounds per cubic yard**
1-1/2	470
1	520
3/4	540
3/8	610

c. Selected target slump must meet the requirements of this section, the contract documents, and must not exceed 9 in. Concrete must not show visible signs of segregation.

d. Enforce the target slump for the duration of the project. Determine the slump by ASTM C143/C143M. Slump tolerances must meet the requirements of ACI 117.

e. The nominal maximum size of coarse aggregate for a mixture must not exceed three-fourths of the minimum clear spacing between reinforcement, one-fifth of the narrowest dimension between sides of forms, or one-third of the thickness of slabs or toppings.

f. Concrete must be air entrained for members assigned to Exposure Class

F1, F2, or F3, with the total air content in accordance with the requirements of the paragraph titled DURABILITY.

g. Measure air content at the point of delivery in accordance with ASTM C173/C173M or ASTM C231/C231M.

h. Concrete for slabs to receive a hard-troweled finish must not contain an air-entraining admixture or have a total air content greater than 3 percent.

i. Concrete properties and requirements for each portion of the structure are specified in the table below. Refer to the paragraph titled DURABILITY for more details on exposure categories and their requirements.

	Minimum *f'c* psi	**Exposure Categories^**	**Miscellaneous Requirements**
Footings (Chiller Pad/Foundation)	4500 at 28 days	C1W1 F2	Max. slump:6 in. Nominal maximum aggregate size must be1 1/2 in.
Slabs-on-ground	4000 at 28 days		

2.5.2 Durability

2.5.2.1 Alkali-Aggregate Reaction

Do not use any aggregate susceptible to alkali-carbonate reaction (ACR). Use one of the three options below for qualifying concrete mixtures to reduce the potential of alkali-silica reaction (ASR):

a. For each aggregate used in concrete, the expansion result determined in accordance with ASTM C1293 must not exceed 0.04 percent at one year.

b. For each aggregate used in concrete, the expansion result of the aggregate and cementitious materials combination determined in accordance with ASTM C1567 must not exceed 0.10 percent at an age of 16 days.

2.5.2.2 Freezing and Thawing Resistance

a. Provide concrete meeting the following requirements based on exposure class assigned to members for freezing-and-thawing exposure in Contract Documents:

Exposure class	Maximum *w/cm**	Minimum *f'c*, psi	Air content	Additional Requirements
F0	N/A	2500	N/A	
F1	0.55	3500	Depends on aggregate size	N/A
F2	0.45	4500	Depends on aggregate size	See limits on maximum cementitious material by mass
F3	0.40	5000	Depends on aggregate size	See limits on maximum cementitious material by mass
F3 plain concrete	0.45	4500	Depends on aggregate size	See limits on maximum cementitious material by mass

*The maximum *w/cm* limits do not apply to lightweight concrete.

b. Concrete must be air entrained for members assigned to Exposure Class F1, F2, or F3. Meet the requirements of the following table:

Nominal maximum aggregate size, in.	Total air content, percent*^	
	Exposure Class F2 and F3	Exposure Class F1
3/8	7.5	6.0
1/2	7.0	5.5
3/4	6.0	5.0
1	6.0	4.5
1-1/2	5.5	4.5
2	5.0	4.0

Nominal maximum aggregate size, in.	Total air content, percent*^	
	Exposure Class F2 and F3	Exposure Class F1
3	5.5	3.5

*Tolerance on air content as delivered must be plus/minus 1.5 percent.

^For f'c greater than 5000 psi, reducing air content by 1.0 percentage point is acceptable.

c. Submit documentation verifying compliance with specified requirements.

d. For sections of the structure that are assigned Exposure Class F3, submit certification on cement composition verifying that concrete mixture meets the requirements of the following table:

Cementitious material	Maximum percent of total cementitious material by mass*
Fly ash or other pozzolans conforming to ASTM C618	25

*Total cementitious material also includes ASTM C150/C150M, ASTM C595/C595M, ASTM C845/C845M, and ASTM C1157/C1157M cement. The maximum percentages above must include:

i. Fly ash or other pozzolans present in ASTM C1157/C1157M or ASTM C595/C595M Type IP or Type IT blended cement.

ii. Slag cement present in ASTM C1157/C1157M or ASTM C595/C595M Type IS or Type IT blended cement.

iii. Silica fume conforming to ASTM C1240 present in ASTM C1157/C1157M or ASTM C595/C595M Type IP or Type IT blended cement.

^Fly ash or other pozzolans and silica fume must constitute no more than 25 percent and 10 percent, respectively, of the total mass of the cementitious materials.

2.5.2.3 Corrosion and Chloride Content

a. Provide concrete meeting the requirements of the following table based on the exposure class assigned to members requiring protection against reinforcement corrosion in Contract Documents.

b. Submit documentation verifying compliance with specified requirements.

c. Determine water-soluble chloride ion content contributed from constituents including water, aggregates, cementitious materials, and admixtures for the concrete mixture by ASTM C1218/C1218M at age between 28 and 42 days.

d. The maximum water-soluble chloride ion (Cl-) content in concrete, percent by mass of cement is as follows:

Exposure class	Maximum *w/cm**	Minimum f'c, psi	Maximum water-soluble chloride ion (CL-) content in concrete, percent by mass of cement
Reinforced concrete			
C0	N/A	2500	1.00
C1	N/A	2500	0.30
C2	0.4	5000	0.15
Prestressed concrete			
C0	N/A	2500	0.06
C1	N/A	2500	0.06
C2	0.4	5000	0.06

*The maximum w/cm limits do not apply to lightweight concrete.

2.5.2.4 Sulfate Resistance

a. Provide concrete meeting the requirements of the following table based on the exposure class assigned to members for sulfate exposure.

Exposure class	Maximum w/cm	Minimum f'c, psi	Required cementitious materials-types			Calcium chloride admixture
			ASTM C150/C150M	ASTM C595/C595M	ASTM C1157/C1157M	
S0	N/A	2500	N/A	N/A	N/A	No restrictions
S1	0.50	4000	II*^	Types with (MS) designation	MS	No restrictions
S2	0.45	4500	V^	Types with (HS) designation	HS	Not permitted
S3	0.45	4500	V + pozzolan or slag cement**	Types with (HS) designation plus pozzolan or slag cement**	HS + pozzolan or slag cement**	Not permitted
S3	0.40	5000	V***	Types with (HS) designation	HS	Not permitted

* For seawater exposure, other types of portland cements with tricalcium aluminate (C3A) contents up to 10 percent are acceptable if the w/cm does not exceed 0.40.

** The amount of the specific source of the pozzolan or slag cement to be used must be at least the amount determined by test or service record to improve sulfate resistance when used in concrete containing Type V cement. Alternatively, the amount of the specific source of the pozzolan or slag used must not be less than the amount tested in

accordance with ASTM C1012/C1012M and meeting the requirements maximum expansion requirements listed herein.

*** If Type V cement is used as the sole cementitious material, the optional sulfate requirement of 0.040 percent maximum expansion in ASTM C150/C150M is required.

^ Other available types of cement, such as Type III or Type I, are acceptable in exposure classes S1 or S2 if the C3A contents are less than 8 or 5 percent, respectively.

b. The maximum w/cm limits for sulfate exposure do not apply to lightweight concrete.

c. Alternative combinations of cementitious materials of those listed in this paragraph are acceptable if they meet the maximum expansion requirements listed in the following table:

Exposure class	**Maximum expansion when tested using ASTM C1012/C1012M**		
	At 6 months	**At 12 months**	**At 18 months**
S1	0.10 percent	N/A	N/A
S2	0.05 percent	0.10 percent^	N/A
S3	N/A	N/A	0.10 percent

^The 12-month expansion limit applies only when the measured expansion exceeds the 6-month maximum expansion limit.

2.5.2.5 Concrete Temperature

The temperature of concrete as delivered must not exceed 95 degrees F.

2.5.2.6 Concrete Permeability

a. Provide concrete meeting the requirements of the following table based on exposure class assigned to members requiring low permeability in the Contract Documents.

Exposure class	**Maximum *w/cm****	**Minimum f'c, psi**	**Additional minimum requirements**
W0	N/A	2500	None
W1	0.5	4000	None
W2	0.50	4000	None

*The maximum w/cm limits do not apply to lightweight concrete.

b. Submit documentation verifying compliance with specified requirements.

2.5.3 Ready-Mix Concrete

Provide concrete that meets the requirements of ASTM C94/C94M.

Ready-mixed concrete manufacturer must provide duplicate delivery tickets with each load of concrete delivered. Provide delivery tickets with the following information in addition to that required by ASTM C94/C94M:

a. Type and brand cement

b. Cement and supplementary cementitious materials content in 94-pound bags per cubic yard of concrete

c. Maximum size of aggregate

d. Amount and brand name of admixtures

e. Total water content expressed by water cementitious material ratio

2.6 REINFORCEMENT

Shop Fabricate reinforcing bars to conform to shapes and dimensions indicated for reinforcement, and as follows:

a. Bend reinforcement cold. Reinforcement must be bent cold in the shop to shapes as indicated. Rebending of a reinforcing bar that has been bent incorrectly is not permitted. Bending must be in accordance with the standard approved practice and by approved machine methods. Provide hooks and bends that are in accordance with the Contract Documents. Fabricate reinforcement in accordance with fabricating tolerances of ACI 117.

b. Submit manufacturer's certified test report for reinforcement.

c. Submit placing drawings showing fabrication dimensions and placement locations of reinforcement and reinforcement supports. Indicate locations of splices, lengths of lap splices, and details of mechanical and welded splices.

d. Submit request with locations and details of splices not indicated in Contract Documents.

e. Submit request to place column dowels without using templates.

g. Submit request for field cutting, including location and type of bar to be cut and reason field cutting is required.

Deliver reinforcing bars bundled, tagged, and marked. Tags must be metal with bar size, length, mark, and other information pressed in by machine. Marks must correspond with those used on the placing drawings.

2.6.1 Reinforcing Bars

a. Deformed, except spirals, load-transfer dowels, and welded wire reinforcement, which may be plain.

b. ASTM A615/A615M with the bars marked S, Grade 60.

d. Submit mill certificates for reinforcing bars.

2.6.1.1 Headed Shear Stud Reinforcement

Headed studs and headed stud assemblies must conform to ASTM A1044/A1044M.

2.6.2 Mechanical Reinforcing Bar Connectors

a. Provide 125 percent minimum yield strength of the reinforcement bar.

b. Mechanical splices for galvanized reinforcing bars must be galvanized or coated with dielectric material.

c. Mechanical splices used with epoxy-coated or dual-coated reinforcing bars must be coated with dielectric material.

d. Submit data on mechanical splices demonstrating compliance with this paragraph.

2.6.3 Wire

b. Plain or deformed steel wire must conform to ASTM A1064/A1064M.

2.6.4 Welded Wire Reinforcement

a. Use welded wire reinforcement specified in Contract Documents and conforming to one or more of the specifications given herein.

b. Plain welded wire reinforcement must conform to ASTM A1064/A1064M, with welded intersections spaced no greater than 12 in. apart in direction of principal reinforcement.

c. Deformed welded wire reinforcement must conform to ASTM A1064/A1064M, with welded intersections spaced no greater than 16 in. apart in direction of principal reinforcement.

d. Epoxy-coated welded wire reinforcement must conform to ASTM A884/A884M. Repair coating damage incurred during shipment, storage, handling, and placing of epoxy-coated welded wire reinforcement in accordance with ASTM A884/A884M. Repair damaged coating areas with patching material in accordance with material manufacturer's written recommendations. If damaged area exceeds 2 percent of surface area in each linear foot of each wire or welded wire reinforcement, the sheet containing the damaged area must not be used. The 2 percent limit on damaged coating area includes repaired areas damaged before shipment as required by ASTM A884/A884M. Fading of coating color is not a cause for rejection of epoxy-coated welded wire reinforcement.

e. Stainless steel welded wire reinforcement must conform to ASTM A1022/A1022M.

f. Zinc-coated (galvanized) welded wire reinforcement must conform to ASTM A1060/A1060M. Repair coating damage incurred during shipment, storage, handling, and placing of zinc-coated (galvanized) welded wire reinforcement in accordance with ASTM A780/A780M. If damaged area exceeds 2 percent of surface area in each linear foot of each wire or welded wire reinforcement, the sheet containing the damaged area must not be used. The 2 percent limit on damaged coating area includes repaired areas damaged before shipment as required by ASTM A1060/A1060M.

2.6.5 Reinforcing Bar Supports

a. Provide reinforcement support types within structure as required by Contract Documents. Conform to CRSI RB4.1. Submit description of reinforcement supports and materials for fastening coated reinforcement if not in conformance with CRSI RB4.1.

c. Legs of supports in contact with formwork may be hot-dip galvanized, or plastic coated after fabrication, or stainless-steel bar supports.

2.6.6 Dowels for Load Transfer in Floors

Provide greased dowels for load transfer in floors of the type, design, weight, and dimensions indicated. Provide dowel bars that are plain-billet steel conforming to ASTM A615/A615M, Grade 40. Provide dowel pipe that is steel conforming to ASTM A53/A53M.

2.6.7 Welding

a. Provide weldable reinforcing bars that conform to ASTM A706/A706M and ASTM A615/A615M and Supplement S1, Grade 60, except that the maximum carbon content must be 0.55 percent.

b. Comply with AWS D1.4/D1.4M unless otherwise specified. Do not tack weld reinforcing bars.

c. Welded assemblies of steel reinforcement produced under factory conditions, such as welded wire reinforcement, bar mats, and deformed bar anchors, are allowed.

d. After completing welds on zinc-coated (galvanized), epoxy-coated, or zinc and epoxy dual-coated reinforcement, coat welds and repair coating damage as previously specified.

PART 3 EXECUTION

3.1 EXAMINATION

a. Do not begin installation until substrates have been properly constructed; verify that substrates are level.

b. If substrate preparation is the responsibility of another installer, notify Contracting Officer of unsatisfactory preparation before processing.

c. Check field dimensions before beginning installation. If dimensions vary too much from design dimensions for proper installation, notify Contracting Officer and wait for instructions before beginning installation.

3.2 PREPARATION

Determine quantity of concrete needed and minimize the production of excess concrete. Designate locations or uses for potential excess concrete before the concrete is poured.

3.2.1 General

a. Surfaces against which concrete is to be placed must be free of

debris, loose material, standing water, snow, ice, and other deleterious substances before start of concrete placing.

b. Remove standing water without washing over freshly deposited concrete. Divert flow of water through side drains provided for such purpose.

3.2.2 Subgrade Under Foundations and Footings

a. When subgrade material is semi-porous and dry, sprinkle subgrade surface with water as required to eliminate suction at the time concrete is deposited, or seal subgrade surface by covering surface with specified vapor retarder.

b. When subgrade material is porous, seal subgrade surface by covering surface with specified vapor retarder.

3.2.3 Subgrade Under Slabs on Ground

a. Before construction of slabs on ground, have underground work on pipes and conduits completed and approved.

b. Clean previously constructed subgrade or fill of foreign materials.

c. Finish surface of capillary water barrier under interior slabs on ground must not show deviation in excess of 1/4 inch when tested with a 10-foot straightedge parallel with and at right angles to building lines.

d. Finished surface of subgrade or fill under exterior slabs on ground must not be more than 0.02-foot above or 0.10-foot below elevation indicated.

3.2.4 Edge Forms and Screed Strips for Slabs

a. Set edge forms or bulkheads and intermediate screed strips for slabs to obtain indicated elevations and contours in finished slab surface, strong enough to support vibrating bridge screeds or roller pipe screeds if nature of specified slab finish requires use of such equipment.

b. Align concrete surface to elevation of screed strips by use of strike-off templates or approved compacting-type screeds.

3.2.5 Reinforcement and Other Embedded Items

a. Secure reinforcement, joint materials, and other embedded materials in position, inspected, and approved before start of concrete placing.

b. When concrete is placed, reinforcement must be free of materials deleterious to bond. Reinforcement with rust, mill scale, or a combination of both will be considered satisfactory, provided minimum nominal dimensions, nominal weight, and minimum average height of deformations of a hand-wire-brushed test specimen are not less than applicable ASTM specification requirements.

3.3 FORMS

a. Provide forms, shoring, and scaffolding for concrete placement. Set forms mortar-tight and true to line and grade.

b. Chamfer above grade exposed joints, edges, and external corners of concrete 0.75 inch. Place chamfer strips in corners of formwork to produce beveled edges on permanently exposed surfaces. Do not bevel reentrant corners or edges of formed joints of concrete.

c. Provide formwork with clean-out openings to permit inspection and removal of debris.

d. Inspect formwork and remove foreign material before concrete is placed.

e. At construction joints, lap form-facing materials over the concrete of previous placement. Ensure formwork is placed against hardened concrete so offsets at construction joints conform to specified tolerances.

f. Provide positive means of adjustment (such as wedges or jacks) of shores and struts. Do not make adjustments in formwork after concrete has reached initial setting. Brace formwork to resist lateral deflection and lateral instability.

g. Fasten form wedges in place after final adjustment of forms and before concrete placement.

h. Provide anchoring and bracing to control upward and lateral movement of formwork system.

i. Construct formwork for openings to facilitate removal and to produce opening dimensions as specified and within tolerances.

j. Provide runways for moving equipment. Support runways directly on formwork or structural members. Do not support runways on reinforcement. Loading applied by runways must not exceed capacity of formwork or structural members.

k. Position and support expansion joint materials, waterstops, and other embedded items to prevent displacement. Fill voids in sleeves, inserts, and anchor slots temporarily with removable material to prevent concrete entry into voids.

l. Clean surfaces of formwork and embedded materials of mortar, grout, and foreign materials before concrete placement.

3.3.1 Coating

a. Cover formwork surfaces with an acceptable material that inhibits bond with concrete.

b. If formwork release agent is used, apply to formwork surfaces in accordance with manufacturer's recommendations before placing reinforcement. Remove excess release agent on formwork prior to concrete placement.

c. Do not allow formwork release agent to contact reinforcement or hardened concrete against which fresh concrete is to be placed.

3.3.2 Forms for Standard Rough Form Finish

Provide formwork in accordance with ACI 301 Section 5 with a surface

finish, SF-1.0, for formed surfaces that are to be concealed by other construction.

3.3.3 Forms for Standard Smooth Form Finish

Provide formwork in accordance with ACI 301 Section 5 with a surface finish, SF-3.0, for formed surfaces that are exposed to view. Do not provide mockup of concrete surface appearance and texture.

3.3.4 Form Ties

a. For post-tensioned structures, do not remove formwork supports until stressing records have been accepted by the Contracting Officer.

b. After ends or end fasteners of form ties have been removed, repair tie holes in accordance with ACI 301 Section 5 requirements.

3.3.5 Forms for Concrete Pan Joist Construction

Factory-fabricate pan-form units for one-way or two-way concrete joist and slab construction of the approximate section indicated, consisting of steel or molded fiberglass concrete form pans. Furnish closure units as required.

3.3.6 Tolerances for Form Construction

a. Construct formwork so concrete surfaces conform to tolerances in ACI 117.

b. Position and secure sleeves, inserts, anchors, and other embedded items such that embedded items are positioned within ACI 117 tolerances.

c. To maintain specified elevation and thickness within tolerances, install formwork to compensate for deflection and anticipated settlement in formwork during concrete placement. Set formwork and intermediate screed strips for slabs to produce designated elevation, camber, and contour of finished surface before formwork removal. If specified finish requires use of vibrating screeds or roller pipe screeds, ensure that edge forms and screed strips are strong enough to support such equipment.

3.3.7 Removal of Forms and Supports

a. If vertical formed surfaces require finishing, remove forms as soon as removal operations will not damage concrete.

b. Remove top forms on sloping surfaces of concrete as soon as removal will not allow concrete to sag. Perform repairs and finishing operations required. If forms are removed before end of specified curing period, provide curing and protection.

c. Do not damage concrete during removal of vertical formwork for columns, walls, and sides of beams. Perform needed repair and finishing operations required on vertical surfaces. If forms are removed before end of specified curing period, provide curing and protection.

3.3.8 Strength of Concrete Required for Removal of Formwork

If removal of formwork, reshoring, or backshoring is based on concrete reaching a specified in-place strength, mold and field-cure cylinders in accordance with ASTM C31/C31M. Test cylinders in accordance with ASTM C39/C39M. Alternatively, use one or more of the methods listed herein to evaluate in-place concrete strength for formwork removal.

a. Tests of cast-in-place cylinders in accordance with ASTM C873/C873M. This option is limited to slabs with concrete depths from 5 to 12 in.

b. Penetration resistance in accordance with ASTM C803/C803M.

c. Pullout strength in accordance with ASTM C900.

d. Maturity method in accordance with ASTM C1074. Submit maturity method data using project materials and concrete mix proportions used on the project to demonstrate the correlation between maturity and compressive strength of laboratory cured test specimens to the Contracting Officer.

3.4 PLACING REINFORCEMENT AND MISCELLANEOUS MATERIALS

a. Unless otherwise specified, place reinforcement and miscellaneous materials in accordance to ACI 301. Provide bars, welded wire reinforcement, wire ties, supports, and other devices necessary to install and secure reinforcement.

b. Reinforcement must not have rust, scale, oil, grease, clay, or foreign substances that would reduce the bond. Rusting of reinforcement is a basis of rejection if the effective cross-sectional area or the nominal weight per unit length has been reduced. Remove loose rust prior to placing steel. Tack welding is prohibited.

c. Nonprestressed cast-in-place concrete members must have concrete cover for reinforcement given in the following table:

Concrete Exposure	**Member**	**Reinforcement**	**Specified cover, in.**
Cast against and permanently in contact with ground	All	All	3
Exposed to weather or in contact with ground	All	No. 6 through No. 18 bars	2
		No. 5 bar, W31 or D31 wire, and smaller	1-1/2

Concrete Exposure	Member	Reinforcement	Specified cover, in.
Not exposed to weather or in contact with ground	Slabs, joists, and walls	No. 14 and No. 18 bars	1-1/2
		No. 11 bar and smaller	3/4
	Beams, columns, pedestals, and tension ties	Primary reinforcement, stirrups, ties, spirals, and hoops	1-1/2

d. Cast-in-place prestressed concrete members must have concrete cover for reinforcement, ducts, and end fittings given in the following table:

Concrete	Member	Reinforcement	Specified
Cast against and permanently in contact with ground	All	All	3
Exposed to weather or in contact with ground	Slabs, joists, and walls	All	1
	All other	All	1-1/2
Not exposed to weather or in contact with ground	Slabs, joists, and walls	All	3/4
	Beams, columns, and tension ties	Primary reinforcement	1-1/2
		Stirrups, ties, spirals, and hoops	1

e. Precast nonprestressed or prestressed concrete members manufactured under plant conditions must have concrete cover for reinforcement, ducts, and end fittings given in the following table:

Concrete Exposure	Member	Reinforcement	Specified cover, in.
Exposed to weather or in contact with ground	Walls	No. 14 and No. 18 bars; tendons larger than 1-1/2 in. diameter	1-1/2
		No. 11 bars and smaller; W31 and D31 wire, and smaller; tendons and strands 1-1/2 in.	3/4
	All other	No. 14 and No. 18 bars; tendons larger than 1-1/2 in.	2
		No. 6 through No. 11 bars; tendons and strands larger than 5/8 in. diameter through 1-1/2 in.	1-1/2
		No. 5 bar, W31 or D31 wire, and smaller; tendons and strands 5/8 in. diameter and smaller	1-1/4

Concrete Exposure	Member	Reinforcement	Specified cover, in.
Not exposed to weather or in contact with ground	Slabs, joists, and walls	No. 14 and No. 18 bars; tendons larger than 1-1/2 in. diameter	1-1/4
		Tendons and strands 1-1/2 in. diameter and smaller	3/4
		No. 11 bar, W31 or D31	5/8
	Beams, columns, pedestals, and tension ties	Primary reinforcement	Greater of bar diameter and 5/8 and need not exceed 1-1/2
		Stirrups, ties, spirals, and hoops	3/8

3.4.1 General

Provide details of reinforcement that are in accordance with the Contract Documents.

3.4.2 Vapor Retarder

a. Install in accordance with ASTM E1643. Provide beneath the on-grade concrete floor slab. Use the greatest widths and lengths practicable to eliminate joints wherever possible. Lap joints a minimum of 12 inches and tape.

b. Remove torn, punctured, or damaged vapor retarder material and provide with new vapor retarder prior to placing concrete. Concrete placement must not damage vapor retarder. Place a 2 inch layer of clean concrete sand on vapor retarder before placing concrete.

3.4.3 Reinforcement Supports

Provide reinforcement support in accordance with CRSI RB4.1 and ACI 301 Section 3 requirements. Also, coat supports for coated or galvanized bars with electrically compatible material for a distance of at least 2 inches beyond the point of contact with the bars.

3.4.4 Splicing

As indicated in the Contract Documents. For splices not indicated follow ACI 301. Do not splice at points of maximum stress. Overlap welded wire reinforcement the spacing of the cross wires, plus 2 inches. AWS D1.4/D1.4M.

3.4.5 Setting Miscellaneous Material

Place and secure anchors and bolts, pipe sleeves, conduits, and other such items in position before concrete placement and support against displacement. Plumb anchor bolts and check location and elevation. Temporarily fill voids in sleeves with readily removable material to prevent the entry of concrete.

3.4.6 Inspection of Reinforcement

Inspect and verify proper reinforcement grade, shape, cross section and condition. Do not use reinforcement with the following defects:

a. Bar lengths, depths, and bends beyond specified fabrication tolerances.

b. Bends or kinks not indicated on drawings or approved shop drawings.

c. Bars with reduced cross section due to rusting or other cause.

3.4.7 Placing Reinforcement

Place reinforcement in accordance with ACI 301.

For slabs on grade (over earth or over capillary water barrier) and for footing reinforcement, support bars or welded wire reinforcement on precast concrete blocks, spaced at intervals required by size of reinforcement, to keep reinforcement the minimum height specified above the underside of slab or footing.

For slabs other than on grade, supports for which any portion is less than 1 inch from concrete surfaces that are exposed to view or to be painted may be precast concrete units, plastic-coated steel, or stainless steel protected bar supports. Precast concrete units must be wedge shaped, not larger than 3-1/2 by 3-1/2 inches, and of thickness equal to that indicated for concrete protection of reinforcement. Provide precast units that have cast-in galvanized tie wire hooked for anchorage and blend with concrete surfaces after finishing is completed.

Provide reinforcement that is supported and secured together to prevent displacement by construction loads or by placing of wet concrete, and as follows:

a. Provide supports for reinforcing bars that are sufficient in number and have sufficient strength to carry the reinforcement they support, and in accordance with ACI 301 and CRSI 10MSP. Do not use supports to support runways for concrete conveying equipment and similar construction loads.

b. Equip supports on ground and similar surfaces with sand-plates.

c. Support welded wire reinforcement as required for reinforcing bars.

d. Secure reinforcements to supports by means of tie wire. Provide black, soft iron wire, not less than 16 gage.

e. Accurately place reinforcement, securely tie at intersections, and hold in position during placing of concrete by spacers, chairs, or other approved supports. Point wire-tie ends away from the form. Unless otherwise indicated, numbers, type, and spacing of supports must conform to the Contract Documents.

f. Bending of reinforcing bars partially embedded in concrete is permitted only as specified in the Contract Documents.

3.4.8 Spacing of Reinforcing Bars

a. As indicated in the Contract Documents.

b. Reinforcing bars may be relocated to avoid interference with other reinforcement, or with conduit, pipe, or other embedded items. If any reinforcing bar is moved a distance exceeding one bar diameter or specified placing tolerance, resulting rearrangement of reinforcement is subject to preapproval by the Contracting Officer.

3.4.9 Concrete Protection for Reinforcement

In accordance with the Contract Documents.

3.4.10 Welding

In accordance with AWS D1.4/D1.4M.

3.5 BATCHING, MEASURING, MIXING, AND TRANSPORTING CONCRETE

In accordance with ASTM C94/C94M, ACI 301, ACI 302.1R and ACI 304R, except as modified herein. Utilize batching equipment such that the concrete ingredients are consistently measured within the following tolerances: 1 percent for cement and water, 2 percent for aggregate, and 3 percent for admixtures. Furnish mandatory batch ticket information for each load of ready mix concrete.

3.5.1 Measuring

Make measurements at intervals as specified in paragraphs SAMPLING and TESTING.

3.5.2 Mixing

a. Mix concrete in accordance with ASTM C94/C94M, ACI 301 and ACI 304R.

b. Machine mix concrete. Begin mixing within 30 minutes after the cement has been added to the aggregates. Place concrete within 90 minutes of either addition of mixing water to cement and aggregates or addition of cement to aggregates. If discharge is acceptable after more than 90 minutes the air content, slump, and concrete temperature shall be tested and shall be within the specified limits. A retarder shall be used to facilitate placing and finishing when concrete temperature is 85 degrees F or greater.

c. If the entrained air content falls below the specified limit, add a sufficient quantity of admixture, within the manufacturer's

recommended dosage, to bring the entrained air content within the specified limits. Dissolve admixtures in the mixing water and mix in the drum to uniformly distribute the admixture throughout the batch. Do not reconstitute concrete that has begun to solidify.

d. When fibers are used, add fibers together with the aggregates and never as the first component in the mixer. Dispense fibers into the mixing system using appropriate dispensing equipment and procedure as recommended by the manufacturer.

3.5.3 Transporting

Transport concrete from the mixer to the forms as rapidly as practicable. Prevent segregation or loss of ingredients. Clean transporting equipment thoroughly before each batch. Do not use aluminum pipe or chutes. Remove concrete which has segregated in transporting and dispose of as directed.

3.6 PLACING CONCRETE

Place concrete in accordance with ACI 301 Section 5. Place concrete within 15 minutes of discharge into non-agitating equipment.

3.6.1 Footing Placement

Concrete for footings may be placed in excavations without forms upon inspection and approval by the Contracting Officer. Excavation width must be a minimum of 4 inches greater than indicated.

3.6.2 Pumping

ACI 304R and ACI 304.2R. Pumping must not result in separation or loss of materials nor cause interruptions sufficient to permit loss of plasticity between successive increments. Loss of slump in pumping equipment must not exceed 2 inches at discharge/placement. Do not convey concrete through pipe made of aluminum or aluminum alloy. Avoid rapid changes in pipe sizes. Limit maximum size of course aggregate to 33 percent of the diameter of the pipe. Limit maximum size of well-rounded aggregate to 40 percent of the pipe diameter. Take samples for testing at both the point of delivery to the pump and at the discharge end.

3.6.3 Cold Weather

Meet the requirements of ACI 301 and ACI 306.1 unless otherwise specified. Do not allow concrete temperature to decrease below 50 degrees F. Obtain approval prior to placing concrete when the ambient temperature is below 40 degrees F or when concrete is likely to be subjected to freezing temperatures within 24 hours. Cover concrete and provide sufficient heat to maintain 50 degrees F minimum adjacent to both the formwork and the structure while curing. Limit the rate of cooling to 5 degrees F in any one hour and 18 degrees F per 24 hours after heat application.

3.6.4 Hot Weather

Meet the requirements of ACI 301 and ACI 305.1 unless otherwise specified. Maintain required concrete temperature using Figure 4.2 in ACI 305R to prevent the evaporation rate from exceeding 0.2 pound of water per square foot of exposed concrete per hour. Cool ingredients before mixing or use other suitable means to control concrete temperature and prevent rapid drying of newly placed concrete. Shade the fresh concrete

as soon as possible after placing. Start curing when the surface of the fresh concrete is sufficiently hard to permit curing without damage. Provide water hoses, pipes, spraying equipment, and water hauling equipment, where job site is remote to water source, to maintain a moist concrete surface throughout the curing period. Provide burlap cover or other suitable, permeable material with fog spray or continuous wetting of the concrete when weather conditions prevent the use of either liquid membrane curing compound or impervious sheets. For vertical surfaces, protect forms from direct sunlight and add water to top of structure once concrete is set.

3.6.5 Bonding

Roughen and clean surfaces of set concrete at joints of laitance, coatings, loose particles, and foreign matter. Roughen surfaces in a manner that exposes the aggregate uniformly and does not leave laitance, loosened particles of aggregate, nor damaged concrete at the surface.

Obtain bonding of fresh concrete that has set as follows:

a. At joints between footings and walls or columns, between walls or columns and the beams or slabs they support, and elsewhere unless otherwise specified; dampen but do not saturate roughened and cleaned surface of set concrete immediately prior to placing fresh concrete.

b. At joints in exposed-to-view work; at vertical joints in walls; at joints near midpoint of span in girders, beams, supported slabs, other structural members; in work designed to contain liquids; dampen but do not saturate the roughened and cleaned surface of set concrete and cover with a cement grout coating.

c. Provide cement grout that consists of equal parts of portland cement and fine aggregate by weight with not more than 6 gallons of water per sack of cement. Apply cement grout with a stiff broom or brush to a minimum thickness of 1/16 inch. Deposit fresh concrete before cement grout has attained its initial set.

3.7 WASTE MANAGEMENT

Provide as specified in the Waste Management Plan and as follows.

3.7.1 Mixing Equipment

Before concrete pours, designate Contractor-owned site meeting environmental standards on-site area to be paved later in project for cleaning out concrete mixing trucks. Minimize water used to wash equipment.

3.7.2 Hardened, Cured Waste Concrete

Crush and reuse hardened, cured waste concrete as fill or as a base course for pavement. Use hardened, cured waste concrete as aggregate in concrete mix if approved by Contracting Officer.

3.7.3 Reinforcing Steel

Collect reinforcing steel and place in designated area for recycling.

3.7.4 Other Waste

Identify concrete manufacturer's or supplier's policy for collection or return of construction waste, unused material, deconstruction waste, and/or packaging material. Return excess cement to supplier. Institute deconstruction and construction waste separation and recycling for use in manufacturer's programs. When such a program is not available, seek local recyclers to reclaim the materials.

3.8 SURFACE FINISHES EXCEPT FLOOR, SLAB, AND PAVEMENT FINISHES

3.8.1 Defects

Repair surface defects in accordance with ACI 301 Section 5.

3.8.2 Not Against Forms (Top of Walls)

Finish surfaces not otherwise specified with wood floats to even surfaces. Match adjacent finishes.

3.8.3 Formed Surfaces

3.8.3.1 Tolerances

Tolerances in accordance with ACI 117 and as indicated.

3.8.3.2 As-Cast Rough Form

Provide for surfaces not exposed to public view a surface finish SF-1.0. Patch holes and defects in accordance with ACI 301.

3.8.3.3 Standard Smooth Finish

Provide for surfaces exposed to public view a surface finish SF-3.0. Patch holes and defects in accordance with ACI 301.

3.9 FLOOR, SLAB, AND PAVEMENT FINISHES AND MISCELLANEOUS CONSTRUCTION

In accordance with ACI 301 and ACI 302.1R, unless otherwise specified. Slope floors uniformly to drains where drains are provided.. Where straightedge measurements are specified, provide straightedge.

3.9.1 Finish

Place, consolidate, and immediately strike off concrete to obtain proper contour, grade, and elevation before bleedwater appears. Permit concrete to attain a set sufficient for floating and supporting the weight of the finisher and equipment. If bleedwater is present prior to floating the surface, drag the excess water off or remove by absorption with porous materials. Do not use dry cement to absorb bleedwater. Do no use grate tampers ("jitterbugs").

3.9.1.1 Scratched

Use for surfaces intended to receive bonded applied cementitious applications. Finish concrete in accordance with ACI 301 Section 5 for a scratched finish.

3.9.1.2 Steel Troweled

Use for floors intended as walking surfaces, and for reception of floor coverings. Finish concrete in accordance with ACI 301 Section 5 for a steel troweled finish.

3.9.1.3 Pavement

Screed the concrete with a template advanced with a combined longitudinal and crosswise motion. Maintain a slight surplus of concrete ahead of the template. After screeding, float the concrete longitudinally. Use a straightedge to check slope and flatness; correct and refloat as necessary. Obtain final finish by a burlap drag. Drag a strip of clean, wet burlap from 3 to 10 feet wide and 2 feet longer than the pavement width across the slab. Produce a fine, granular, sandy textured surface without disfiguring marks. Round edges and joints with an edger having a radius of 1/8 inch.

3.9.2 Flat Floor Finishes

ACI 302.1R. Construct in accordance with one of the methods recommended in Table 10.15.3a, "Slab-on-ground flatness/levelness construction guide" or Table 10.15.3b, "Suspended slab flatness/levelness construction guide" appropriate for the type of construction. ACI 117 for tolerance tested by ASTM E1155.

b. Specified Industrial:

Floor Flatness (Ff) 30 minimum

Floor Levelness (FL) 20 minimum

3.9.2.1 Measurement of Floor Tolerances

Test slab within 24 hours of the final troweling. Provide tests to Contracting Officer within 12 hours after collecting the data. Floor flatness inspector is required to provide a tolerance report which includes:

a. Key plan showing location of data collected.

b. Results required by ASTM E1155.

3.9.2.2 Remedies for Out of Tolerance Work

Repair and retest any floors not meeting specified tolerances. Prior to repair, submit and receive approval for the proposed repair, including product data from any materials proposed. Repairs must not result in damage to structural integrity of the floor. For floors exposed to public view, repairs must prevent any uneven or unusual coloring of the surface.

3.9.3 Concrete Walks

Provide 4 inches thick minimum. Provide contraction joints spaced every 5 linear feet unless otherwise indicated. Cut contraction joints 1 inch deep, or one fourth the slab thickness whichever is deeper, with a jointing tool after the surface has been finished. Provide 0.5 inch thick transverse expansion joints at changes in direction where sidewalk abuts curb, steps, rigid pavement, or other similar structures; space expansion

joints every 50 feet maximum. Give walks a broomed finish. Unless indicated otherwise, provide a transverse slope of 1/48. Limit variation in cross section to 1/4 inch in 5 feet.

3.10 JOINTS

3.10.1 Construction Joints

Make and locate joints not indicated so as not to impair strength and appearance of the structure, as approved. Make joints perpendicular to main reinforcement. Continue and develop reinforcement across construction joints. Locate construction joints as follows:

3.10.1.1 Construction Joints for Constructability Purposes

a. In walls, at top of footing; at top of slabs on ground; at top and bottom of door and window openings or where required to conform to architectural details; and at underside of deepest beam or girder framing into wall.

b. In columns or piers, at top of footing; at top of slabs on ground; and at underside of deepest beam or girder framing into column or pier.

c. Near midpoint of spans for supported slabs, beams, and girders unless a beam intersects a girder at the center, in which case construction joints in girder must offset a distance equal to twice the width of the beam. Make transfer of shear through construction joint by use of inclined reinforcement.

Provide keyways at least 1-1/2-inches deep in construction joints in walls and slabs and between walls and footings; approved bulkheads may be used for slabs.

3.10.2 Isolation Joints in Slabs on Ground

a. Provide joints at points of contact between slabs on ground and vertical surfaces, such as column pedestals, foundation walls, grade beams, and elsewhere as indicated.

b. Fill joints with premolded joint filler strips 1/2 inch thick, extending full slab depth. Install filler strips at proper level below finish floor elevation with a slightly tapered, dress-and-oiled wood strip temporarily secured to top of filler strip to form a groove not less than 3/4 inch in depth where joint is sealed with sealing compound and not less than 1/4 inch in depth where joint sealing is not required. Remove wood strip after concrete has set. Clean groove of foreign matter and loose particles after surface has dried.

3.10.3 Contraction Joints in Slabs on Ground

a. Provide joints to form panels as indicated.

b. Under and on exact line of each control joint, cut 50 percent of welded wire reinforcement before placing concrete.

c. Sawcut contraction joints into slab on ground in accordance with ACI 301 Section 5.

d. Provide joints 1/8-inch wide by 1/5 to 1/4 of slab depth and form by

inserting hand-pressed fiberboard strip into fresh concrete until top surface of strip is flush with slab surface. After concrete has cured for at least 7 days, remove inserts and clean groove of foreign matter and loose particles.

e. Sawcutting will be limited to within 12 hours after set and at 1/4 slab depth.

3.10.4 Sealing Joints in Slabs on Ground

a. Seal contraction and control joints which are to receive finish flooring material with joint sealing compound after concrete curing period. Slightly underfill groove with joint sealing compound to prevent extrusion of compound. Remove excess material as soon after sealing as possible.

b. Leave sealed groove ready to receive filling material that is provided as part of finish floor covering work.

3.11 CURING AND PROTECTION

Curing and protection in accordance with ACI 301 Section 5, unless otherwise specified. Begin curing immediately following form removal. Avoid damage to concrete from vibration created by blasting, pile driving, movement of equipment in the vicinity, disturbance of formwork or protruding reinforcement, and any other activity resulting in ground vibrations. Protect concrete from injurious action by sun, rain, flowing water, frost, mechanical injury, tire marks, and oil stains. Do not allow concrete to dry out from time of placement until the expiration of the specified curing period. Do not use membrane-forming compound on surfaces where appearance would be objectionable, on any surface to be painted, where coverings are to be bonded to the concrete, or on concrete to which other concrete is to be bonded. If forms are removed prior to the expiration of the curing period, provide another curing procedure specified herein for the remaining portion of the curing period. Provide moist curing for those areas receiving liquid chemical sealer, hardener, or epoxy coating. Allow curing compound/sealer installations to cure prior to the installation of materials that adsorb VOCs.

3.11.1 Curing Periods

ACI 301 Section 5, except 10 days for retaining walls, pavement or chimneys. Begin curing immediately after placement. Protect concrete from premature drying, excessively hot temperatures, and mechanical injury; and maintain minimal moisture loss at a relatively constant temperature for the period necessary for hydration of the cement and hardening of the concrete. The materials and methods of curing are subject to approval by the Contracting Officer.

3.11.2 Curing Formed Surfaces

Accomplish curing of formed surfaces, including undersurfaces of girders, beams, supported slabs, and other similar surfaces by moist curing with forms in place for full curing period or until forms are removed. If forms are removed before end of curing period, accomplish final curing of formed surfaces by any of the curing methods specified above, as applicable.

3.11.3 Curing Unformed Surfaces

a. Accomplish initial curing of unformed surfaces, such as monolithic slabs, floor topping, and other flat surfaces, by membrane curing.

b. Accomplish final curing of unformed surfaces by any of curing methods specified, as applicable.

c. Accomplish final curing of concrete surfaces to receive liquid floor hardener of finish flooring by moisture-retaining cover curing.

3.11.4 Temperature of Concrete During Curing

When temperature of atmosphere is 41 degrees F and below, maintain temperature of concrete at not less than 55 degrees F throughout concrete curing period or 45 degrees F when the curing period is measured by maturity. When necessary, make arrangements before start of concrete placing for heating, covering, insulation, or housing as required to maintain specified temperature and moisture conditions for concrete during curing period.

When the temperature of atmosphere is 80 degrees F and above or during other climatic conditions which cause too rapid drying of concrete, make arrangements before start of concrete placing for installation of wind breaks, of shading, and for fog spraying, wet sprinkling, or moisture-retaining covering of light color as required to protect concrete during curing period.

Changes in temperature of concrete must be uniform and not exceed 5 degrees F in any one hour nor 49 degrees F in any 24-hour period.

3.11.5 Protection from Mechanical Injury

During curing period, protect concrete from damaging mechanical disturbances, particularly load stresses, heavy shock, and excessive vibration and from damage caused by rain or running water.

3.11.6 Protection After Curing

Protect finished concrete surfaces from damage by construction operations.

3.12 FIELD QUALITY CONTROL

3.12.1 Aggregate Testing

3.12.1.1 Fine Aggregate

At least once during each shift when the concrete plant is operating, there must be one sieve analysis and fineness modulus determination in accordance with ASTM C136/C136M and COE CRD-C 104 for the fine aggregate or for each fine aggregate if it is batched in more than one size or classification. The location at which samples are taken may be selected by the Contractor as the most advantageous for control. However, the Contractor is responsible for delivering fine aggregate to the mixer within specification limits. When the amount passing on any sieve is outside the specification limits, immediately resample and retest the fine aggregate. If there is another failure on any sieve, immediately report the fact to the Contracting Officer, stop concreting, and take immediate steps to correct the grading.

3.12.1.2 Coarse Aggregate

At least once during each shift in which the concrete plant is operating, provide a sieve analysis in accordance with ASTM C136/C136M for each size of coarse aggregate. The location at which samples are taken may be selected by the Contractor as the most advantageous for production control. However, the Contractor is responsible for delivering the aggregate to the mixer within specification limits. A test record of samples of aggregate taken at the same locations must show the results of the current test as well as the average results of the five most recent tests including the current test. The Contractor may adopt limits for control coarser than the specification limits for samples taken other than as delivered to the mixer to allow for degradation during handling. When the amount passing any sieve is outside the specification limits, immediately resample and retest the coarse aggregate. If the second sample fails on any sieve, report that fact to the Contracting Officer. Where two consecutive averages of 5 tests are outside specification limits, the operation will be considered out of control and reported to the Contracting Officer. Stop concreting and take immediate steps to correct the grading.

3.12.2 Concrete Sampling

ASTM C172/C172M. Collect samples of fresh concrete to perform tests specified. ASTM C31/C31M for making test specimens.

3.12.3 Concrete Testing

3.12.3.1 Slump Tests

ASTM C143/C143M. Take concrete samples during concrete placement/discharge. The maximum slump may be increased as specified with the addition of an approved admixture provided that the water-cementitious material ratio is not exceeded. Perform tests at commencement of concrete placement, when test cylinders are made.

3.12.3.2 Temperature Tests

Test the concrete delivered and the concrete in the forms. Perform tests in hot or cold weather conditions (below 50 degrees F and above 80 degrees F) for each batch (minimum) or every 20 cubic yards (maximum) of concrete, until the specified temperature is obtained, and whenever test cylinders and slump tests are made.

3.12.3.3 Compressive Strength Tests

ASTM C39/C39M. Make six 6 inch by 12 inch or nine 4 inch by 8 inch test cylinders for each set of tests in accordance with ASTM C31/C31M, ASTM C172/C172M and applicable requirements of ACI 305R and ACI 306R. Take precautions to prevent evaporation and loss of water from the specimen. Test two 6 inch by 12 inch or three 4 inch by 8 inch cylinders at 7 days, two 6 inch by 12 inch or three 4 inch by 8 inch cylinders at 28 days. Take samples for strength tests for each concrete mixture placed each day not less than once a day, nor less than once for each 150 cubic yards of concrete, nor less than once for each 5000 square feet of surface area for slabs or walls. For the entire project, take no less than five sets of samples and perform strength tests for each mix design of concrete placed. Each strength test result must be the average of two 6 inch by 12

inch or three 4 inch by 8 inch cylinders from the same concrete sample tested at 28 days 56 days. Concrete compressive tests must meet the requirements of this section, the Contract Document, and ACI 301.

3.12.3.4 Air Content

ASTM C173/C173M or ASTM C231/C231M for normal weight concrete and ASTM C173/C173M for lightweight concrete. Test air-entrained concrete for air content at the same frequency as specified for slump tests.

3.12.3.5 Strength of Concrete Structure

The strength of the concrete structure will be considered to be deficient if any of the following conditions are identified:

a. Failure to meet compressive strength tests as evaluated.

b. Reinforcement not conforming to requirements specified.

c. Concrete which differs from required dimensions or location in such a manner as to reduce strength.

d. Concrete curing and protection of concrete against extremes of temperature during curing, not conforming to requirements specified.

e. Concrete subjected to damaging mechanical disturbances, particularly load stresses, heavy shock, and excessive vibration.

f. Poor workmanship likely to result in deficient strength.

Where the strength of the concrete structure is considered deficient submit a mitigation or remediation plan for review and approval by the Contracting Officer.

3.12.3.6 Non-Conforming Materials

Factors that indicate that there are non-conforming materials include (but not limited to) excessive compressive strength, inadequate compressive strength, excessive slump, excessive voids and honeycombing, concrete delivery records that indicate excessive time between mixing and placement, or excessive water was added to the mixture during delivery and placement. Any of these indicators alone are sufficient reason for the Contracting Officer to request additional sampling and testing.

Conduct investigations into non-conforming materials at the Contractor's expense. The Contractor is responsible for the investigation and must make written recommendations to adequately mitigate or remediate the non-conforming material. The Contracting Officer may accept, accept with reduced payment, require mitigation, or require removal and replacement of non-conforming material at no additional cost to the Government.

3.12.3.7 Testing Concrete Structure for Strength

When there is evidence that strength of concrete structure in place does not meet specification requirements or there are non-conforming materials, make cores drilled from hardened concrete for compressive strength determination in accordance with ASTM C42/C42M, and as follows:

a. Take at least three representative cores from each member or area of

concrete-in-place that is considered potentially deficient. Location of cores will be determined by the Contracting Officer.

b. Test cores after moisture conditioning in accordance with ASTM C42/C42M if concrete they represent is more than superficially wet under service.

c. Air dry cores, (60 to 80 degrees F with relative humidity less than 60 percent) for 7 days before test and test dry if concrete they represent is dry under service conditions.

d. Strength of cores from each member or area are considered satisfactory if their average compressive strength is equal to or greater than 85 percent of the design compressive strength, and if no single core strength is less than 75 percent of the design compressive strength. Additional testing of cores extracted from locations represented by erratic core strength results will be permitted only when approved by the Contracting Officer.

e. Core specimens will be taken and tested by the Government. If the results of core-boring tests indicate that the concrete as placed does not conform to the drawings and specification, the cost of such tests and restoration required must be borne by the Contractor.

Fill core holes solid with patching mortar and finished to match adjacent concrete surfaces.

Correct concrete work that is found inadequate by core tests in a manner approved by the Contracting Officer.

3.13 REPAIR, REHABILITATION AND REMOVAL

Before the Contracting Officer accepts the structure, inspect the structure for cracks, damage and substandard concrete placements that may adversely affect the service life of the structure. Prepare a report documenting these defects which includes recommendations for repair, removal or remediation and submit to the Contracting Officer for approval before any corrective work is accomplished.

3.13.1 Crack Repair

Prior to final acceptance, document all cracks in excess of 0.02 inches wide and repair. Submit the proposed method and materials to repair the cracks to the Contracting Officer for approval. Address the amount of movement expected in the crack due to temperature changes and loading.

3.13.2 Repair of Weak Surfaces

Weak surfaces are defined as mortar-rich, rain-damaged, uncured, or containing exposed voids or deleterious materials. Concrete surfaces with weak surfaces less than 1/4 inch thick must be diamond ground to remove the weak surface. Surfaces containing weak surfaces greater than 1/4 inch thick must be removed and replaced or mitigated in a manner acceptable to the Contracting Officer.

3.13.3 Failure of Quality Assurance Test Results

Proposed mitigation efforts must be approved by the Contracting Officer prior to proceeding.

P2# 519087 - DSSC DLA Repair Building 27
Columbus, OH

-- End of Section --

SECTION 04 20 00

UNIT MASONRY
11/15, CHG 2: 05/19

PART 1 GENERAL

1.1 REFERENCES

The publications listed below form a part of this specification to the extent referenced. The publications are referred to within the text by the basic designation only.

AMERICAN CONCRETE INSTITUTE (ACI)

ACI SP-66	(2004) ACI Detailing Manual

ASTM INTERNATIONAL (ASTM)

ASTM A153/A153M	(2023) Standard Specification for Zinc Coating (Hot-Dip) on Iron and Steel Hardware
ASTM A185/A185M	(2007) Standard Specification for Steel Welded Wire Reinforcement, Plain, for Concrete
ASTM A615/A615M	(2024) Standard Specification for Deformed and Plain Carbon-Steel Bars for Concrete Reinforcement
ASTM A641/A641M	(2019) Standard Specification for Zinc-Coated (Galvanized) Carbon Steel Wire
ASTM A653/A653M	(2023) Standard Specification for Steel Sheet, Zinc-Coated (Galvanized) or Zinc-Iron Alloy-Coated (Galvannealed) by the Hot-Dip Process
ASTM A951/A951M	(2011) Standard Specification for Steel Wire for Masonry Joint Reinforcement
ASTM A996/A996M	(2016) Standard Specification for Rail-Steel and Axle-Steel Deformed Bars for Concrete Reinforcement
ASTM A1008/A1008M	(2024) Standard Specification for Steel, Sheet, Cold-Rolled, Carbon, Structural, High-Strength Low-Alloy, High-Strength Low-Alloy with Improved Formability, Solution Hardened, and Bake Hardenable
ASTM A1064/A1064M	(2024) Standard Specification for Carbon-Steel Wire and Welded Wire Reinforcement, Plain and Deformed, for Concrete
ASTM C67/C67M	(2023a) Standard Test Methods for Sampling

	and Testing Brick and Structural Clay Tile
ASTM C90	(2024) Standard Specification for Loadbearing Concrete Masonry Units
ASTM C129	(2023) Standard Specification for Nonloadbearing Concrete Masonry Units
ASTM C207	(2024) Standard Specification for Hydrated Lime for Masonry Purposes
ASTM C270	(2019a; E 2019) Standard Specification for Mortar for Unit Masonry
ASTM C476	(2023) Standard Specification for Grout for Masonry
ASTM C494/C494M	(2024) Standard Specification for Chemical Admixtures for Concrete
ASTM C641	(2023) Standard Test Method for Iron Staining Materials in Lightweight Concrete Aggregates
ASTM C780	(2023) Standard Test Method for Preconstruction and Construction Evaluation of Mortars for Plain and Reinforced Unit Masonry
ASTM C1019	(2024) Standard Test Method for Sampling and Testing Grout
ASTM C1384	(2012a) Standard Specification for Admixtures for Masonry Mortars
ASTM C1611/C1611M	(2021) Standard Test Method for Slump Flow of Self-Consolidating Concrete
ASTM D2000	(2018) Standard Classification System for Rubber Products in Automotive Applications
ASTM D2287	(2019) Nonrigid Vinyl Chloride Polymer and Copolymer Molding and Extrusion Compounds

THE MASONRY SOCIETY (TMS)

TMS MSJC	(2016) Masonry Standard Joint Committee's (MSJC) Book - Building Code Requirements and Specification for Masonry Structures, Containing TMS 402/ACI 530/ASCE 5, TMS 602/ACI 530.1/ASCE 6, and Companion Commentaries

1.2 SUBMITTALS

Government approval is required for submittals with a "G" or "S" classification. Submittals not having a "G" or "S" classification are for Contractor Quality Control approval. Submittals not having a "G" or "S" classification are for information only. When used, a code following the

"G" classification identifies the office that will review the submittal for the Government. Submit the following in accordance with Section 01 33 00 SUBMITTAL PROCEDURES:

SD-02 Shop Drawings

Cut CMU Drawings;

Reinforcement Detail Drawings;

SD-03 Product Data

Hot Weather Procedures;

Cold Weather Procedures;

Clay or Shale Brick;

Salvaged Brick;

Cement;

Cementitious Materials;

Insulation;

SD-04 Samples

Clay or Shale Brick;

Concrete Masonry Units (CMU);

Concrete Brick;

Admixtures for Masonry Mortar;

Anchors, Ties, and Bar Positioners;

Joint Reinforcement;

Clay Masonry Expansion-Joint Materials;

Insulation;

SD-05 Design Data

Masonry Compressive Strength;

Fire-Rated Concrete Masonry Units

SD-06 Test Reports

Efflorescence Test

Fire-Rated Concrete Masonry Units

Field Testing of Mortar

Field Testing of Grout

Prism Tests

Single-Wythe Masonry Wall Water Penetration Test

SD-07 Certificates

Special Masonry Inspector Qualifications

Clay or Shale Brick

Concrete Masonry Units (CMU)

Concrete Brick

Cementitious Materials

Admixtures for Masonry Mortar

Admixtures for Grout

Anchors, Ties, and Bar Positioners

Joint Reinforcement

Insulation

Insulation

SD-08 Manufacturer's Instructions

Admixtures for Masonry Mortar

Admixtures for Grout

SD-10 Operation and Maintenance Data

Take-Back Program

SD-11 Closeout Submittals

Recycled Content of Clay Units; S

Recycled Content of Cement; S

1.3 QUALITY ASSURANCE

1.3.1 Special Masonry Inspector Qualifications

Refer to Section 01 45 35 SPECIAL INSPECTIONS for qualifications and responsibilities of the masonry special inspector.

1.4 DELIVERY, STORAGE, AND HANDLING

Deliver, store, handle, and protect material to avoid chipping, breakage, and contact with soil or contaminating material. Store and prepare materials in already disturbed areas to minimize project site disturbance and size of project site.

1.4.1 Masonry Units

Cover and protect masonry units from precipitation. Conform to handling and storage requirements of TMS MSJC.

a. Pack glazed brick, glazed structural clay tile, and prefaced concrete masonry units in the manufacturer's standard paper cartons, trays, or shrink wrapped pallets with a divider between each unit. Do not stack pallets. Do not remove units from cartons until cartons are placed on scaffolds or in the location where units are to be laid.

b. Mark prefabricated lintels on top sides to show either the lintel schedule number or the number and size of top and bottom bars.

1.4.2 Reinforcement, Anchors, and Ties

Store steel reinforcing bars, coated anchors, ties, and joint reinforcement above the ground. Maintain steel reinforcing bars and uncoated ties free of loose mill scale and loose rust.

1.4.3 Cementitious Materials, Sand and Aggregates

Deliver cementitious and other packaged materials in unopened containers, plainly marked and labeled with manufacturers' names and brands. Store cementitious material in dry, weathertight enclosures or completely cover. Handle cementitious materials in a manner that will prevent the inclusion of foreign materials and damage by water or dampness. Store sand and aggregates in a manner to prevent contamination and segregation.

1.5 PROJECT/SITE CONDITIONS

Conform to TMS MSJC for hot and cold weather masonry erection.

1.5.1 Hot Weather Procedures

When ambient air temperature exceeds 100 degrees F, or exceeds 90 degrees F and the wind velocity is greater than 8 mph, comply with TMS MSJC Article 1.8 D for: preparation prior to conducting masonry work; construction while masonry work is in progress; and protection for newly completed masonry.

1.5.2 Cold Weather Procedures

When ambient temperature is below 40 degrees F, comply with TMS MSJC Article 1.8 C for: preparation prior to conducting masonry work; construction while masonry work is in progress; and protection for newly completed masonry.

PART 2 PRODUCTS

2.1 SYSTEM DESCRIPTION

2.1.1 Design - Specified Compressive Strength of Masonry

The specified compressive strength of masonry, f'm, is 2000 PSI.

2.1.2 Performance - Verify Masonry Compressive Strength

Verify specified compressive strength of masonry using the "Unit Strength

Method" of TMS MSJC. Submit calculations and certifications of unit and mortar strength.

2.2 MANUFACTURED UNITS

2.2.1 General Requirements

Do not change the source of materials, which will affect the appearance of the finished work, after the work has started except with Contracting Officer's approval. Submit test reports from an approved independent laboratory. Certify test reports on a previously tested material as the same materials as that proposed for use in this project. Submit certificates of compliance stating that the materials meet the specified requirements.

2.2.2 Clay or Shale Brick

2.2.2.1 General

2.2.2.1.1 Sample Submittal

Submit brick samples as specified, showing the color range and texture of clay or shale brick. Limit units used on the project to those that conform to the approved sample. Submit sample of colored mortar with applicable masonry unit and color samples of three stretcher units and one unit for each type of special shape.

2.2.2.1.2 Uniformity

Manufacture bricks at one time and from the same run. Deliver clay or shale brick units factory-blended to provide a uniform appearance and color range in the completed wall.

Provide brick with specified sizes.

a. Match existing brick size.

2.2.2.2 Salvaged Brick

Use salvaged bricks and other masonry units in place of new bricks or masonry units as indicated. Wash bricks salvaged from foundries or industrial buildings with appropriate metal-dust removing cleaner. When using salvaged brick, select salvaged exterior face bricks from exterior locations.

Provide salvaged bricks that meet standards of new bricks otherwise used in application, and cleaned of all mortar prior to use. Submit documentation certifying products are from salvaged/recovered sources. Indicate relative dollar value of salvaged content products to total dollar value of products included in project.

2.2.3 Concrete Units

2.2.3.1 Aggregates

Test lightweight aggregates, and blends of lightweight and heavier aggregates in proportions used in producing the units, for stain-producing iron compounds in accordance with ASTM C641,visual classification method. Do not incorporate aggregates for which the iron stain deposited on the

filter paper exceeds the "light stain" classification.

Use industrial waste by-products (air-cooled slag, cinders, or bottom ash), ground waste glass and concrete, granulated slag, and expanded slag in aggregates.

2.2.3.2 Concrete Masonry Units (CMU)

2.2.3.2.1 Cement

Use only cement that has a low alkali content and is of one brand.

2.2.3.2.2 Recycled Content

Provide units with a minimum of 10 percent post-consumer recycled content, or a minimum of 40 percent post-industrial recycled content, based on mass, cost, or volume. Units may contain post-consumer or post-industrial recycled content.

2.2.3.2.3 Size

Provide unit size to match existing.

2.2.3.2.4 Unit Types

b. Hollow Non-Load-Bearing Units: ASTM C129 medium weight. Load-bearing units may be provided in lieu of non-load-bearing units.

c. Solid Load-Bearing Units: ASTM C90 medium weight units. Provide solid units as indicated.

2.2.3.2.5 Jamb Units

Provide jamb units of the shapes and sizes to conform with wall units. Solid units may be incorporated in the masonry work where necessary to fill out at corners, gable slopes, and elsewhere as approved.

Provide sash jamb units with a 3/4 by 3/4 inch groove near the center at end of each unit.

2.3 EQUIPMENT

2.3.1 Vibrators

Maintain at least one spare vibrator on site at all times.

2.3.2 Grout Pumps

Pumping through aluminum tubes is not permitted.

2.4 MATERIALS

2.4.1 Mortar Materials

2.4.1.1 Cementitious Materials

Provide cementitious materials that conform to those permitted by ASTM C270.

2.4.1.2 Hydrated Lime and Alternates

Provide lime that conforms to one of the materials permitted by ASTM C207 for use in combination with portland cement, hydraulic cement, and blended hydraulic cement. Do not use lime in combination with masonry cement or mortar cement.

2.4.1.3 Admixtures for Masonry Mortar

In cold weather, use a non-chloride based accelerating admixture that conforms to ASTM C1384, unless Type III portland cement is used in the mortar.

2.4.1.4 Aggregate and Water

Provide aggregate (sand) and water that conform to materials permitted by ASTM C270.

2.4.2 Grout and Ready-Mix Grout Materials

2.4.2.1 Cementitious Materials for Grout

Provide cementitious materials that conform to those permitted by ASTM C476.

2.4.2.2 Admixtures for Grout

Water-reducing admixtures that conform to ASTM C494/C494M Type F or G and viscosity-modifying admixtures that conform to ASTM C494/C494M Type S are permitted for use in grout. Other admixtures require approval by the Contracting Officer.

In cold weather, a non-chloride based accelerating admixture may be used subject to approval by the Contracting Officer; use accelerating admixture that is non-corrosive and conforms to ASTM C494/C494M, Type C.

2.4.2.3 Aggregate and Water

Provide fine and coarse aggregates and water that conform to materials permitted by ASTM C476.

2.5 MORTAR AND GROUT MIXES

2.5.1 Mortar Mix

a. Provide mortar Type S unless specified otherwise herein. Do not use masonry cement in the mortar. Do not use air-entrainment in the mortar.

b. Use ASTM C270 Type S cement-lime mortar or mortar cement mortar for seismic-force-resisting elements indicated.

c. Provide mortar that conforms to ASTM C270. Use Type S mortar .

d. Provide Type S mortar for non-load-bearing, non-shear-wall interior masonry.

e. For field-batched mortar, measure component materials by volume. Use measuring boxes for materials that do not come in packages, such as sand, for consistent batching. Mix cementitious materials and aggregates between 3 and 5 minutes in a mechanical batch mixer with a

sufficient amount of water to produce a workable consistency. Do not hand mix mortar unless approved by the Contracting Officer. Maintain workability of mortar by remixing or retempering. Discard mortar that has begun to stiffen or is not used within 2-1/2 hours after initial mixing.

f. For preblended mortar, follow manufacturer's mixing instructions.

2.5.2 Grout and Ready Mix Grout Mix

Use grout that conforms to ASTM C476, fine or coarse. Use conventional grout with a slump between 8 and 11 inches. Use self-consolidating grout with slump flow of 24 to 30 inches and a visual stability index (VSI) not greater than 1. Provide minimum grout strength of 2000 psi in 28 days, as tested in accordance with ASTM C1019. Do not change proportions and do not use materials with different physical or chemical characteristics in grout for the work unless additional evidence is furnished that grout meets the specified requirements. Use ready-mixed grout that conforms to ASTM C476.

2.6 ACCESSORIES

2.6.1 Grout Barriers

Grout barriers for vertical cores that consist of fine mesh wire, fiberglass, or expanded metal.

2.6.2 Anchors, Ties, and Bar Positioners

2.6.2.1 General

a. Fabricate anchors and ties without drips or crimps. Size anchors and ties to provide a minimum of 5/8 inch mortar cover from each face of masonry.

b. Fabricate steel wire anchors and ties from wire conforming to ASTM A1064/A1064M and hot-dip galvanize in accordance with ASTM A153/A153M.

c. Fabricate joint reinforcement in conformance with ASTM A951/A951M. Hot dip galvanize joint reinforcement in exterior walls and in interior walls exposed to moist environment in conformance with ASTM A153/A153M. Galvanize joint reinforcement in other interior walls in conformance with ASTM A641/A641M; coordinate with paragraph JOINT REINFORCEMENT below.

d. Fabricate sheet metal anchors and ties in conformance with ASTM A1008/A1008M. Hot dip galvanize sheet metal anchors and ties in exterior walls and in interior walls exposed to moist environment in compliance with ASTM A153/A153M Class B. Galvanize sheet metal anchors and ties in other interior walls in compliance with ASTM A653/A653M, Coating Designation G60.

e. Submit two anchors, ties and bar positioners of each type used, as samples.

2.6.2.2 Wire Mesh Anchors

Provide wire mesh anchors of 1/4 inch mesh galvanized hardware cloth,

conforming to ASTM A185/A185M, with length not less than 12 inches, at intersections of interior non-bearing masonry walls.

2.6.2.3 Bar Positioners

Factory-fabricate bar positioners, used to prevent displacement of reinforcing bars during the course of construction, from 9 gauge steel wire or equivalent, and hot-dip galvanized. Bar positioners must be suitable for intended use and be corrosion resistant steel. Bar positioners not fully contained within the wythe must be hot-dip galvanized.

2.6.3 Joint Reinforcement

Factory fabricate joint reinforcement in conformance with ASTM A951/A951M, welded construction. Provide ladder type joint reinforcement, having one longitudinal wire in the mortar bed of each face shell for hollow units and one wire for solid units and with all wires a minimum of 9 gauge. Size joint reinforcement to provide a minimum of 5/8 inch cover from each face. Space crosswires not more than 16 inches. Provide joint reinforcement for straight runs in flat sections not less than 10 feet long. Provide joint reinforcement with factory formed corners and intersections. If approved for use, joint reinforcement may be furnished with adjustable wall tie features. Submit one piece of each type used, including corner and wall intersection pieces, showing at least two cross wires.

2.6.4 Reinforcing Steel Bars

Provide reinforcing steel bars and rods conforming to ASTM A615/A615M or ASTM A996/A996M, Grade 60.

2.6.5 Concrete Masonry Control Joint Keys

Provide control joint keys of a factory fabricated solid section of natural or synthetic rubber (or combination thereof) conforming to ASTM D2000 M2AA-805 with a minimum durometer hardness of 80 or polyvinyl chloride conforming to ASTM D2287 Type PVC 654-4 with a minimum durometer hardness of 85. Form the control joint key with a solid shear section not less than 5/8 inch thick and 3/8 inch thick flanges, with a tolerance of plus or minus 1/16 inch, to fit neatly, but without forcing, in masonry unit jamb sash grooves.

2.6.6 Clay Masonry Expansion-Joint Materials

Provide backer rod and sealant, adequate to accommodate joint compression and extension equal to 50 percent of the width of the joint. Provide the backer rod of compressible rod stock of closed cell polyethylene foam, polyurethane foam, butyl rubber foam, or other flexible, nonabsorptive material as recommended by the sealant manufacturer. Provide sealant in conformance with Section 07 92 00 JOINT SEALANTS.

Submit one piece of each type of material used.

PART 3 EXECUTION

3.1 EXAMINATION

Prior to start of work, verify the applicable conditions as set forth in

TMS MSJC, inspection.

3.2 PREPARATION

3.2.1 Stains

Protect exposed surfaces from mortar and other stains. When mortar joints are tooled, remove mortar from exposed surfaces with fiber brushes and wooden paddles. Protect base of walls from splash stains by covering adjacent ground with sand, sawdust, or polyethylene.

3.2.2 Loads

Do not apply uniform loads for at least 12 hours or concentrated loads for at least 72 hours after masonry is constructed. Provide temporary bracing as required.

3.2.3 Concrete Surfaces

Where masonry is to be placed, clean concrete of laitance, dust, dirt, oil, organic matter, or other foreign materials and slightly roughen to provide a surface texture with a depth of at least 1/8 inch. Sandblast, if necessary, to remove laitance from pores and to expose the aggregate.

3.2.4 Bracing

Provide bracing and scaffolding necessary for masonry work. Design bracing to resist wind pressure as required by OSHA and local codes and submit bracing calculations, sealed by a registered professional engineer. Do not remove bracing in less than 10 days.

3.3 ERECTION

3.3.1 General

a. Coordinate masonry work with the work of other trades to accommodate built-in items and to avoid cutting and patching. Lay masonry units in the indicated bond pattern. Lay facing courses level with back-up courses, unless the use of adjustable ties has been approved in which case the tolerances is plus or minus 1/2 inch. Adjust each unit to its final position while mortar is still soft and has plastic consistency.

b. Remove and clean units that have been disturbed after the mortar has stiffened, and relay with fresh mortar. Keep air spaces, cavities, chases, expansion joints, and spaces to be grouted free from mortar and other debris. Select units to be used in exposed masonry surfaces from those having the least amount of chipped edges or other imperfections detracting from the appearance of the finished work.

c. When necessary to temporarily discontinue the work, step (rack) back the masonry for joining when work resumes. Toothing may be used only when specifically approved by the Contracting Officer. Before resuming work, remove loose mortar and thoroughly clean the exposed joint. Cover the top of walls subjected to rain or snow with nonstaining waterproof covering or membrane when work is not in process. Extend the covering a minimum of 610 mm 2 feet down on each side of the wall and hold securely in place.

d. Ensure that units being laid and surfaces to receive units are free of water film and frost. Lay solid units in a nonfurrowed full bed of mortar. Bevel mortar for veneer wythes and slope down toward the cavity side. Shove units into place so that the vertical joints are tight. Completely fill vertical joints between solid units with mortar, except where indicated at control, expansion, and isolation joints. Place hollow units so that mortar extends to the depth of the face shell at heads and beds, unless otherwise indicated. Mortar will be permitted to protrude up to 1/2 inch into the space or cells to be grouted. Provide means to prevent mortar from dropping into the space below or clean grout spaces prior to grouting.

e. In multi-wythe construction with collar joints no more than 3/4 inch wide, bring up the inner wythe not more than 16 inches ahead of the outer wythe. Fill collar joints with mortar during the laying of the facing wythe, and do not lag the laying of the facing wythe by back-buttering each unit as it is laid.

3.3.1.1 Jointing

Tool mortar joints when the mortar is thumbprint hard. Tool horizontal joints after tooling vertical joints. Brush mortar joints to remove loose and excess mortar.

3.3.1.1.1 Tooled Joints

Tool mortar joints in exposed exterior and interior masonry surfaces concave, using a jointer that is slightly larger than the joint width so that complete contact is made along the edges of the unit. Perform tooling so that the mortar is compressed and the joint surface is sealed. Use a jointer of sufficient length to obtain a straight and true mortar joint. No exterior joints are to be left un-tooled.

3.3.1.1.2 Flush Joints

Flush cut mortar joints in concealed masonry surfaces and joints at electrical outlet boxes in wet areas. Finish flush cut joints by cutting off the mortar flush with the face of the wall. Point joints in unparged masonry walls below grade tight. For architectural units, such as fluted units, completely fill both the head and bed joints and flush cut.

3.3.1.1.3 Door and Window Frame Joints

On the exposed interior side of exterior frames, rake joints between frames and abutting masonry walls to a depth of 3/8 inch. On the exterior side of exterior frames,rake joints between frames and abutting masonry walls to a depth of 3/8 inch.

3.3.1.1.4 Joint Widths

a. Construct brick masonry with mortar joint widths equal to the difference between the specified and nominal dimensions of the unit, within tolerances permitted by TMS MSJC.

b. Provide 3/8 inch wide mortar joints in concrete masonry, except for prefaced concrete masonry units.

c. Provide 3/8 inch wide mortar joints on unfaced side of prefaced concrete masonry units and not less than 3/16 inch nor more than 1/4

inch wide on prefaced side.

d. Maintain mortar joint widths within tolerances permitted by TMS MSJC

3.3.1.2 Cutting and Fitting

Use full units of the proper size wherever possible, in lieu of cut units. Locate cut units where they would have the least impact on the architectural aesthetic goals of the facility. Perform cutting and fitting, including that required to accommodate the work of others, by masonry mechanics using power masonry saws. Concrete masonry units may be wet or dry cut. Before being placed in the work, dry wet-cut units to the same surface-dry appearance as uncut units being laid in the wall. Provide cut edges that are clean, true and sharp.

a. Carefully make openings in the masonry so that wall plates, cover plates or escutcheons required by the installation will completely conceal the openings and will have bottoms parallel with the masonry bed joints. Provide reinforced masonry lintels above openings over 12 inches wide for pipes, ducts, cable trays, and other wall penetrations, unless steel sleeves are used.

b. Do not reduce masonry units in size by more than one-third in height and one-half in length. Do not locate cut products at ends of walls, corners, and other openings.

3.3.1.3 Unfinished Work

Rack back unfinished work for joining with new work. Toothing may be resorted to only when specifically approved by the Contracting Officer. Remove loose mortar and thoroughly clean the exposed joints before laying new work.

3.3.1.4 Control Joints

Provide control joints in concrete masonry as indicated. Construct by raking out mortar within the head joint, using special control-joint units, using sash jamb units with control joint key, using open end stretcher units placed with the closed end at the joint in accordance with the details shown on the Drawings. Form a continuous vertical joint at control joint locations, including through bond beams, by utilizing half blocks in alternating courses on each side of the joint. Interrupt the control joint key in courses containing continuous bond beam reinforcement. Do not interrupt the horizontal reinforcement and grout at the control joint. Interrupt the horizontal reinforcement and grout in bond beams at the control joint except in bond beams at the floor and roof diaphragms.

Where mortar was placed in the joint, rake both faces of the control joints to a depth of 3/4 inch. Install backer rod and sealant on both faces in accordance with Section 07 92 00 JOINT SEALANTS.

3.3.2 Clay or Shale Brick Masonry

3.3.2.1 Brick Placement

Blend all brick at the jobsite from several cubes to produce a uniform appearance when installed. An observable "banding" or "layering" of colors or textures caused by improperly mixed brick is unacceptable. Lay

brick facing with the better face exposed. Lay brick in running bond with each course bonded at corners, unless otherwise indicated. Lay molded brick with the frog side down. Do not lay brick that is cored, recessed, or has other deformations in a manner that allows those deformations to be exposed to view; lay 100 percent solid units in these areas. Completely fill head and bed joints of solid units with mortar. Lay hollow units with mortar joints as specified for concrete masonry units.

Place exterior face of salvaged bricks towards the exterior.

3.3.2.2 Wetting of Units

Wet clay, shale brick, or hollow brick units having an initial rate of absorption of more than 1 gram per minute per square inch of bed surface in conformance with ASTM C67/C67M. Ensure that each unit is nearly saturated when wetted but surface dry when laid.

Test clay or shale brick daily on the job, prior to laying, as follows: Using a wax pencil, draw a circle the size of a quarter on five randomly selected bricks. Apply 20 drops of water with a medicine dropper to the surface within the circle on each brick. If the average time that the water is completely absorbed in the five bricks is less than 1-1/2 minutes, wet bricks represented by the five bricks tested.

3.3.2.3 Brick Sills

Lay brick on edge, slope not less than 3/4 inch downward to the outside, and project not less than 1/2 inch beyond the face of the wall to form a wash and drip. Fill all joints solidly with mortar and tool.

3.3.3 Composite Walls

Tie masonry wythes together with joint reinforcement or with unit wall ties. Embed wall ties at least 1-1/2 inch into mortar of solid units and at least 1/2 inch into the mortar of the outer face shell of hollow units. Provide at least one tie every 2.67 square feet for wire size W1.7 and at least one tie every 4.50 square feet for wire size W2.8. Space ties at a maximum of 36 inches horizontally and 24 inches vertically. Do not cross expansion joints or control joints with ties. Fill collar joints between masonry facing and masonry backup solidly with grout.

3.3.4 Reinforced, Single Wythe Concrete Masonry Units Walls

3.3.4.1 Concrete Masonry Unit Placement

a. Fully bed units used to form piers, pilasters, columns, starting courses on footings, solid foundation walls, lintels, and beams, and where cells are to be filled with grout in mortar under both face shells and webs. Provide mortar beds under both face shells for other units. Mortar head joints for a distance in from the face of the unit not less than the thickness of the face shell.

b. Solidly grout foundation walls below grade.

c. Stiffen double walls at wall-mounted plumbing fixtures by use of strap anchors, two above each fixture and two below each fixture, located to avoid pipe runs, and extending from center to center of each wall within the double wall. Adequately reinforce walls and partitions for support of wall-hung plumbing fixtures when chair carriers are not

specified.

d. Submit drawings showing elevations of walls exposed to view and indicating the location of all cut CMU products.

3.3.4.2 Preparation for Reinforcement

Lay units in such a manner as to preserve the unobstructed vertical continuity of cores to be grouted. Remove mortar protrusions extending 1/2 inch or more into cells before placing grout. Position reinforcing bars accurately as indicated before placing grout. Where vertical reinforcement occurs, fill cores solid with grout in accordance with paragraph PLACING GROUT in this Section.

3.4 INSTALLATION

3.4.1 Bar Reinforcement Installation

3.4.1.1 Preparation

Submit detail drawings showing bar splice locations. Identify bent bars on a bending diagram and reference and locate such bars on the drawings. Show wall dimensions, bar clearances, and wall openings. Utilize bending details that conform to the requirements of ACI SP-66. No approval will be given to the shop drawings until the Contractor certifies that all openings, including those for mechanical and electrical service, are shown. If, during construction, additional masonry openings are required, resubmit the approved shop drawings with the additional openings shown along with the proposed changes. Clearly highlight location of these additional openings. Provide wall elevation drawings with minimum scale of 1/4 inch per foot. Submit drawings including plans, elevations, and details of wall reinforcement; details of reinforcing bars at corners and wall intersections; offsets; tops, bottoms, and ends of walls; control and expansion joints; lintels; and wall openings.

Clean reinforcement of loose, flaky rust, scale, grease, mortar, grout, and other coatings that might destroy or reduce its bond prior to placing grout. Do not use bars with kinks or bends not shown on the approved shop drawings. Place reinforcement prior to grouting. Unless otherwise indicated, extend vertical wall reinforcement to within 2 inches of tops of walls.

3.4.1.2 Positioning Bars

a. Accurately place vertical bars within the cells at the positions indicated on the drawings. Maintain a minimum clearance of 1/2 inch between the bars and masonry units. Provide minimum clearance between parallel bars of 1/2 inch between the bars and masonry units for coarse grout and a minimum clearance of 1/4 inch between the bars and masonry units for fine grout. Provide minimum clearance between parallel bars of 1 inch or one diameter of the reinforcement, whichever is greater. Vertical reinforcement may be held in place using bar positioners located near the ends of each bar and at intermediate intervals of not more than 192 diameters of the reinforcement or by other means to prevent displacement beyond permitted tolerances. As masonry work progresses, secure vertical reinforcement to prevent displacement beyond allowable tolerances.

b. Wire column and pilaster lateral ties in position around the vertical

reinforcing bars. Place lateral ties in contact with the vertical reinforcement and do not place in horizontal mortar bed joints.

c. Position horizontal reinforcing bars as indicated. Stagger splices in adjacent horizontal bars, unless otherwise indicated.

d. Form splices by lapping bars as indicated. Do not cut, bend or eliminate reinforcing bars. Foundation dowel bars may be field-bent when permitted by TMS MSJC.

3.4.1.3 Splices of Bar Reinforcement

Lap splice reinforcing bars as indicated. When used, provide welded or mechanical connections that develop at least 125 percent of the specified yield strength of the reinforcement.

3.4.2 Placing Grout

3.4.2.1 General

Fill cells containing reinforcing bars with grout. Solidly grout hollow masonry units in walls or partitions supporting plumbing, heating, or other mechanical fixtures, voids at door and window jambs, and other indicated spaces. Solidly grout cells under lintel bearings on each side of openings for full height of openings. Solidly grout walls below grade, lintels, and bond beams. Units other than open end units may require grouting each course to preclude voids in the units.

Discard site-mixed grout that is not placed within 1-1/2 hours after water is first added to the batch or when the specified slump is not met without adding water after initial mixing. Discard ready-mixed grout that does not meet the specified slump without adding water other than water that was added at the time of initial discharge. Allow sufficient time between grout lifts to preclude displacement or cracking of face shells of masonry units. Provide a grout shear key between lifts when grouting is delayed and the lower lift loses plasticity. If blowouts, flowouts, misalignment, or cracking of face shells should occur during construction, tear down the wall and rebuild.

3.4.2.2 Vertical Grout Barriers for Multi-Wythe Composite Walls

In multi-wythe composite walls, provide grout barriers in the collar join not more than 30 feet apart, or as required, to limit the horizontal flow of grout for each pour.

3.4.2.3 Horizontal Grout Barriers

Embed horizontal grout barriers in mortar below cells of hollow units receiving grout.

3.4.2.4 Grout Holes and Cleanouts

3.4.2.4.1 Grout Holes

Provide grouting holes in slabs, spandrel beams, and other in-place overhead construction. Locate holes over vertical reinforcing bars or as required to facilitate grout fill in bond beams. Provide additional openings spaced not more than 16 inches on centers where grouting of hollow unit masonry is indicated. Fom such openings not less than 4 inches

in diameter or 3 by 4 inches in horizontal dimensions. Upon completion of grouting operations, plug and finish grouting holes to match surrounding surfaces.

3.4.2.4.2 Cleanouts for Hollow Unit Masonry Construction

For hollow masonry units. provide cleanout holes at the bottom of every grout pour in cores containing vertical reinforcement when the height of the grout pour exceeds 5 feet 4 inches. Where all cells are to be grouted, construct cleanout courses using bond beam units in an inverted position to permit cleaning of all cells. Provide cleanout holes at a maximum spacing of 32 inches where all cells are to be filled with grout.

Establish a new series of cleanouts if grouting operations are stopped for more than 4 hours. Provide cleanouts not less than 3 by 3 inch by cutting openings in one face shell. Manufacturer's standard cutout units may be used at the Contractor's option. Do not cleanout holes until masonry work, reinforcement, and final cleaning of the grout spaces have been completed and inspected. For walls which will be exposed to view, close cleanout holes in an approved manner to match surrounding masonry.

3.4.2.4.3 Cleanouts for Multi-Wythe Composite Masonry Construction

Provide cleanouts for construction of walls that incorporate a grout filled cavity between solid masonry wythes, provide cleanouts at the bottom of every pour by omitting every other masonry unit from one wythe. Establish a new series of cleanouts if grouting operations are stopped for more than 4 hours. Do not plug cleanout holes until masonry work, reinforcement, and final cleaning of the grout spaces have been completed and inspected. For walls which will be exposed to view, close cleanout holes in an approved manner to match surrounding masonry.

3.4.2.5 Grout Placement

A grout pour is the total height of masonry to be grouted prior to erection of additional masonry. A grout lift is an increment of grout placement within a grout pour. A grout pour is filled by one or more lifts of grout.

a. Lay masonry to the top of a pour permitted by TMS MSJC Table 7, based on the size of the grout space and the type of grout. Prior to grouting, remove masonry protrusions that extend 1/2 inch or more into cells or spaces to be grouted. Provide grout holes and cleanouts in accordance with paragraph GROUT HOLES AND CLEANOUTS above when the grout pour height exceeds 5 feet 4 inches. Hold reinforcement, bolts, and embedded connections rigidly in position before grouting is started. Do not prewet concrete masonry units.

b. Place grout using a hand bucket, concrete hopper, or grout pump to fill the grout space without segregation of aggregate. Operate grout pumps to produce a continuous stream of grout without air pockets, segregation, or contamination.

c. If the masonry has cured at least 4 hours, grout slump is maintained between 10 to 11 inches, and no intermediate reinforced bond beams are placed between the top and bottom of the pour height, place conventional grout in lifts not exceeding 12 feet 8 inches. For the same curing and slump conditions but with intermediate bond beams, limit conventional grout lift to the bottom of the lowest bond beam

that is more than 5 feet 4 inches above the bottom of the lift, but do not exceed 12 feet 8 inches. If masonry has not cured at least 4 hours or grout slump is not maintained between 10 to 11 inches, place conventional grout in lifts not exceeding 5 feet 4 inches.

d. Consolidate conventional grout lift and reconsolidate after initial settlement before placing next lift. For grout pours that are 12 inches or less in height, consolidate and reconsolidate grout by mechanical vibration or puddling. For grout pours that are greater than 12 inches in height, consolidate and reconsolidate grout by mechanical vibration. Apply vibrators at uniformly spaced points not further apart than the visible effectiveness of the machine. Limit duration of vibration to time necessary to produce satisfactory consolidation without causing segregation. If previous lift is not permitted to set, dip vibrator into previous lift. Do not insert vibrators into lower lifts that are in a semi-solidified state. If lower lift sets prior to placement of subsequent lift, form a grout key by terminating grout a minimum of 1-1/2 inch below a mortar joint. Vibrate each vertical cell containing reinforcement in partially grouted masonry. Do not form grout keys within beams.

e. If the masonry has cured 4 hours, place self-consolidating grout (SCG) in lifts not exceeding the pour height. If masonry has not cured for at least 4 hours, place SCG in lifts not exceeding 5 feet 4 inches. Do not mechanically consolidate self-consolidating grout. Place self-consolidating grout in accordance with manufacturer's recommendations.

f. Upon completion of each day's grouting, remove waste materials and debris from the equipment, and dispose of outside the masonry.

3.4.3 Joint Reinforcement Installation

Install joint reinforcement at 16 inches on center unless otherwise indicated. Lap joint reinforcement not less than 6 inches. Install prefabricated sections at corners and wall intersections. Place the longitudinal wires of joint reinforcement in mortar beds to provide not less than 5/8 inch cover to either face of the unit.

3.4.4 Bond Beams

Reinforce and grout bond beams as indicated and as described in paragraphs above. Install grout barriers under bond beam units to retain the grout as required, unless wall is fully grouted or solid bottom units are used. For high lift grouting in partially grouted masonry, provide grout retaining material on the top of bond beams to prevent upward flow of grout. Ensure that reinforcement is continuous, including around corners, except through control joints or expansion joints, unless otherwise indicated.

3.5 APPLICATION

3.5.1 Interface with Other Products

3.5.1.1 Built-In Items

Fill spaces around built-in items with mortar. Point openings around flush-mount electrical outlet boxes in wet locations with mortar. Embed anchors, ties, wall plugs, accessories, flashing, pipe sleeves and other

items required to be built-in as the masonry work progresses. Fully embed anchors, ties and joint reinforcement in the mortar. Fill cells receiving anchor bolts and cells of the first course below bearing plates with grout, unless otherwise indicated.

3.5.1.2 Door and Window Frame Joints

On the exposed interior and exterior sides of exterior frames, rake joints between frames and abutting masonry walls to a depth of 3/8 inch.

3.5.1.3 Bearing Plates

Set bearing plates for beams, joists, joist girders and similar structural members to the proper line and elevation with damp-pack bedding mortar, except where non-shrink grout is indicated. Provide bedding mortar and non-shrink grout s specified in Section 03 30 00 CAST-IN-PLACE CONCRETE.

3.5.2 Tolerances

Lay masonry plumb, true to line, with courses level within the tolerances of TMS MSJC, Article 3.3 F.

3.6 FIELD QUALITY CONTROL

3.6.1 Tests

3.6.1.1 Field Testing of Mortar

Perform mortar testing at the following frequency: 1 times per 50 square feet. For each required mortar test, provide a minimum of three mortar samples. Perform initial mortar testing prior to construction for comparison purposes during construction.

Prepare and test mortar samples for mortar aggregate ratio in accordance with ASTM C780 Appendix A4. Prepare and test mortar compressive strength specimens in accordance with ASTM C780 Appendix A6.

3.6.1.2 Field Testing of Grout

a. Perform grout testing at the following frequency: 1 times per 50 square feet. For each required grout property to be evaluated, provide a minimum of three specimens.

b. Sample and test conventional and self-conslidating grout for compressive strength and temperature in accordance with ASTM C1019.

c. Evaluate slump in conventional grout in accordance with ASTM C1019.

d. Evaluate slump flow and visual stability index of self-consolidating grout in accordance with ASTM C1611/C1611M.

3.6.2 Special Inspection

Perform special inspections and testing in accordance with Section 01 45 35 SPECIAL INSPECTIONS.

3.7 POINTING AND CLEANING

After mortar joints have attained their initial set, but prior to

hardening, completely remove mortar and grout daubs and splashings from masonry-unit surfaces that will be exposed or painted. Before completion of the work, rake out defects in joints of masonry to be exposed or painted, fill with mortar, and tool to match existing joints. Immediately after grout work is completed, remove scum and stains that have percolated through the masonry work using a low pressure stream of water and a stiff bristled brush. Do not clean masonry surfaces, other than removing excess surface mortar, until mortar in joints has hardened. Leave masonry surfaces clean, free of mortar daubs, dirt, stain, and discoloration, including scum from cleaning operations, and with tight mortar joints throughout. Do not use metal tools and metal brushes for cleaning.

3.7.1 Dry-Brushing Concrete Masonry

Dry brush exposed concrete masonry surfaces at the end of each day's work and after any required pointing, using stiff-fiber bristled brushes.

3.7.2 Clay Brick Surfaces

Clean exposed clay brick masonry surfaces to obtain surfaces free of stain, dirt, mortar and grout daubs, efflorescence, and discoloration or scum from cleaning operations. Perform cleaning in accordance with the approved cleaning procedure demonstrated on the mockup.

After cleaning, examine the sample panel of similar material for discoloration or stain as a result of cleaning. If the sample panel is discolored or stained, change the method of cleaning to ensure that the masonry surfaces in the structure will not be adversely affected. Water-soak exposed masonry surfaces and then clean with a proprietary masonry cleaning agent specifically recommended for the color and texture by the clay brick manufacturer and manufacturer of the cleaning product. Apply the solution with stiff fiber brushes, followed immediately by thorough rinsing with clean water. Use proprietary cleaning agents in conformance with the cleaning product manufacturer's printed recommendations. Remove efflorescence in conformance with the brick manufacturer's recommendations.

3.8 PROTECTION

Protect facing materials against staining. Cover top of walls with nonstaining waterproof covering or membrane to protect from moisture intrusion when work is not in progress. Continue covering the top of the unfinished walls until the wall is waterproofed with a complete roof or parapet system. Extend covering a minimum of 2 feet down on each side of the wall and hold securely in place. Before starting or resuming work, clean top surface of masonry in place of loose mortar and foreign material.

-- End of Section --

P2# 519087 - DSSC DLA Repair Building 27
Columbus, OH

SECTION 05 05 20

POST-INSTALLED CONCRETE AND MASONRY ANCHORS
05/22, CHG 1: 08/24

PART 1 GENERAL

1.1 REFERENCES

The publications listed below form a part of this specification to the extent referenced. The publications are referred to within the text by the basic designation only.

AMERICAN CONCRETE INSTITUTE (ACI)

ACI 355.2	(2007) Qualification of Post-Installed Mechanical Anchors in Concrete and Commentary
ACI 355.4	(2011) Qualification of Post-Installed Adhesive Anchors in Concrete (ACI 355.4) and Commentary

ASTM INTERNATIONAL (ASTM)

ASTM A36/A36M	(2019) Standard Specification for Carbon Structural Steel
ASTM A153/A153M	(2023) Standard Specification for Zinc Coating (Hot-Dip) on Iron and Steel Hardware
ASTM A193/A193M	(2024) Standard Specification for Alloy-Steel and Stainless Steel Bolting Materials for High-Temperature Service and Other Special Purpose Applications
ASTM A615/A615M	(2024) Standard Specification for Deformed and Plain Carbon-Steel Bars for Concrete Reinforcement
ASTM E488/E488M	(2022) Standard Test Methods for Strength of Anchors in Concrete Elements

INTERNATIONAL CODE COUNCIL (ICC)

ICC IBC	(2024) International Building Code

U.S. ARMY CORPS OF ENGINEERS (USACE)

EM 385-1-1	(2024) Safety -- Safety and Occupational Health (SOH) Requirements

1.2 APPLICABILITY

This guide specification covers the requirements for all anchors that are post-installed into hardened concrete, concrete masonry, or brick. This

guide specification does not cover through bolts, powder or pneumatic actuated nails, or cast in anchors. Refer to Section 05 50 13 MISCELLANEOUS METAL FABRICATIONS for requirements of through bolts, powder or pneumatic actuated nails, or cast in anchors.

1.3 DEFINITIONS

1.3.1 Anchor

"Anchor" includes steel elements post-installed into hardened concrete, concrete masonry, or brick and used to transmit applied loads.

1.3.2 Periodic Special Inspections

"Periodic Special Inspection" as used herein means that, as a minimum, the Post-Installed Anchor Special Inspector must perform inspections in accordance with this specification.

1.3.3 Continuous Special Inspections

"Continuous Special Inspection" as used herein means that the Post-Installed Anchor Special Inspector observes the drilling and cleaning of holes, the injection of adhesive into the holes, and the insertion of anchors into the holes. When applicable for the type of installation, or as indicated in the project drawings, "Continuous Special Inspection" also includes observation of measures to secure the anchor during the adhesive curing period.

1.4 SUBMITTALS

Government approval is required for submittals with a "G" or "S" classification. Submittals not having a "G" or "S" classification are for Contractor Quality Control approval. Submittals not having a "G" or "S" classification are for information only. When used, a code following the "G" classification identifies the office that will review the submittal for the Government. Submit the following in accordance with Section 01 33 00 SUBMITTAL PROCEDURES:

SD-01 Preconstruction Submittals

Installer Qualifications;

Post-Installed Anchor Special Inspector Qualifications;

SD-03 Product Data

Mechanical Anchors in Concrete;

Adhesive Anchor System in Concrete;

Mechanical and Adhesive Anchors in Masonry;

Non-Shrink, Non-Metallic Grout;

SD-06 Test Reports

Post-Installed Anchor Special Inspections Report;

SD-07 Certificates

Post-Installed Anchor Certification;

SD-08 Manufacturer's Instructions

Manufacturer's Printed Installation Instructions;

Non-Shrink, Non-Metallic Grout;

Manufacturer's Safety Data Sheets

1.5 QUALITY ASSURANCE

Perform all work in accordance with EM 385-1-1 and all manufacturer's instructions and recommendations. To protect personnel from overexposure to toxic materials, conform to the applicable manufacturer's Safety Data Sheets (SDS) or local regulation. Submit the SDS for epoxies and other potentially hazardous materials.

1.5.1 Qualifications

The submittals must identify individuals who will be working on this contract and their relevant experience and training. Do not make changes in approved personnel without prior approval of the Contracting Officer.

1.5.1.1 Installer Qualifications

Each worker engaged in the installation of post-installed anchors must have satisfactorily completed an applicable certification program or equivalent instruction program through the manufacturer or manufacturer's representative for all anchoring products they will install. A manufacturer's representative must train all installers per the installation instructions as listed in the ICC-ES Evaluation Report for the anchor being installed. Training must consist of a review and performance test of the complete installation process, including but not limited to:

(1) Hole drilling procedure

(2) Hole preparation & cleaning technique

(3) Adhesive injection technique & dispenser training / maintenance

(4) Anchor/threaded rod preparation and installation

(5) Rebar dowel preparation and installation

(6) Proof loading/torquing

(7) Installation in horizontal and upward orientations

Submit certification for each worker showing that they have completed the above training within three years prior to onsite work. Certification must include organization or manufacturer's name, instructor's name and qualifications, trainee's name, list of instruction received, date of instruction, and confirmation of successful performance tests.

1.5.1.2 Post-Installed Anchor Special Inspector Qualifications

The Contractor must retain the services of a third party Special Inspector independent of the installing contractor and manufacturer. The individual(s) who perform special inspections for post-installed anchors must meet all Installer Qualification requirements and have a minimum of 5 years of experience as a Special Inspector on previous projects involving similar scope of work. Submit resumes, pertinent information, past experience, and training.

1.6 DELIVERY, STORAGE, AND HANDLING

1.6.1 Packing, Shipping, Handling, and Unloading

Deliver products to job site in manufacturer's or distributor's original packaging undamaged, complete with installation instructions. Inspect materials delivered to site for damage. Unload and store with minimal handling.

1.6.2 Storage

Protect, store, and handle materials in accordance with manufacturer's recommendations to prevent damage or deterioration. Do not allow chemical materials to freeze. Remove materials that have not be stored in accordance with the manufacturer's recommendations, including expired materials, from the job site.

PART 2 PRODUCTS

2.1 MATERIALS

2.1.1 Post-Installed Anchors

Provide anchors of the type, effective embedment, and diameter indicated on contract drawings. Minimum spacing and concrete edge distances must be as shown on contract drawings. Design values listed must be as tested according to ASTM E488/E488M for the substrate type, substrate moisture condition, concrete aggregate type (normal weight or lightweight concrete), and concrete/masonry strength. Minimum allowable strength tension and shear values must be as indicated on contract drawings. If more than one type of anchor is to be used on a project, clearly indicate on the submittal where each type of anchor will be used.

2.1.1.1 Post-Installed Anchor Certification

Submit product information with recommended design values and physical characteristics for each type anchor shown on the drawings.

Provide certified test reports showing compliance with specified performance characteristics and physical properties. Anchors must have one of the following certifications:

(1) ICC-ES Evaluation Report indicating conformance with current applicable ICC ES Acceptance Criteria

(2) Third party Evaluation Report in conformance with ACI 355.2 or ACI 355.4, as applicable. Third party must be accredited under ISO/IEC 17025 by a recognized accreditation body conforming to the requirements of ISO/IEC 17011 in accordance with ACI 355.4."

2.1.1.2 Manufacturer's Printed Installation Instructions

Submit manufacturer's instructions for each anchor type shown on the drawings.

2.1.1.3 Mechanical Anchors in Concrete

Anchors must have been tested and qualified for performance in cracked and uncracked concrete in accordance with ACI 355.2.

Anchors must be galvanized in accordance with ASTM A153/A153M or stainless steel in accordance with ASTM A193/A193M unless otherwise indicated.

2.1.1.4 Adhesive Anchor System in Concrete

Use an adhesive to bond steel anchors to concrete. The adhesive must be a moisture insensitive, structural adhesive. Anchors must have been tested and qualified for performance in cracked and uncracked concrete, horizontal and overhead applications, and long term creep in accordance with ACI 355.4.

Threaded rod anchors must meet the requirements of ASTM A36/A36M. Threaded rods must be galvanized in accordance with ASTM A153/A153M or stainless steel in accordance with ASTM A193/A193M unless otherwise indicated. Reinforcing bars must meet the requirements of ASTM A615/A615M Grade 60.

Adhesive anchors must have the below characteristic bond strengths for uncracked and cracked concrete in 3000 psi concrete with maximum short term temperatures of 110 degrees F and maximum long term temperatures of 100 degrees F:

ANCHOR	Tau,uncr (characteristic bond strength, uncracked concrete)	Tau,cr (characteristic bond strength, cracked concrete)
	(psi)	(psi)
1/2" diameter threaded rod	500	250
#4 reinforcing bar	500	250

2.1.1.5 Mechanical and Adhesive Anchors in Masonry

Anchors must have been tested and qualified, by a third party, specifically for performance in filled concrete masonry to match the project's actual base material.

Adhesives must be moisture insensitive, low creep, structural adhesive. Threaded rods must meet the requirements of ASTM A36/A36M.

Anchors must be galvanized in accordance with ASTM A153/A153M or stainless steel in accordance with ASTM A193/A193M unless otherwise indicated.

2.2 EQUIPMENT

Assemble at the site of the work, sufficient equipment that is dependable, appropriate and adequate to accomplish the work specified. Maintain the

equipment in good working condition.

PART 3 EXECUTION

3.1 ANCHORING AND REINFORCING

Install anchors in accordance with the spacing and edge clearances indicated on the drawings. Anchor capacity is also highly dependent on proper installation. Follow all manufacturer and Evaluation Report installation instructions.

3.1.1 Drilling and Installing Mechanical Anchors

Drill holes for anchors using drilling equipment and bits suitable for the intended purpose, in accordance with Manufacturer's published installation instructions. Diameter of holes must be as recommended by the anchor manufacturer. Unless otherwise shown on the Drawings, all holes must be drilled perpendicular to the concrete surface. Deviations more than 6 degrees from perpendicular are not acceptable. Unless otherwise specified, do not drill holes in concrete or masonry until concrete, mortar, or grout has achieved full design strength. Mechanical anchors must not be installed in concrete that is less than 7 days old.

Clean holes, install anchors and set anchors in place in accordance with the manufacturer's recommendations. Protect threads and anchor from damage during anchor installation. Ensure proper embedment and placement in accordance with contract documents and all other work. Aim wedges away from any concrete edges that are less than 9 inches from centerline of hole.

Tighten nuts against smooth washers to the manufacturer's recommended torque, using a calibrated torque wrench. Following attainment of 10 percent of the specified torque, 100 percent of the specified torque must be reached within 7 or less complete turns of the nut. If the specified torque is not achieved within the required number of turns, the anchor must be removed and replaced unless otherwise directed by the Engineer of Record.

3.1.2 Drilling and Installing Adhesive Anchors

Drill holes for anchors using drilling equipment and bits suitable for the intended purpose, in accordance with Manufacturer's Printed Installation Instructions and Evaluation Report installation instructions. Diameter of holes must be as recommended by the anchor manufacturer. Unless otherwise shown on the drawings, all holes must be drilled perpendicular to the concrete surface. Deviations more than 10 degrees from perpendicular are not acceptable. Unless otherwise specified, do not drill holes in concrete or masonry until concrete, mortar, or grout has achieved full design strength. Adhesive anchors must not be installed in concrete that is less than 21 days old.

Clean holes, place grout, and install anchors in accordance with anchor manufacturer's recommendations. Remove excess adhesive after the anchor has been set in place. Remove spills on adjacent surfaces. When installing resin cartridges or capsules in submerged conditions, place properly proportioned resin material in bottom of hole using a mixing tube prior to inserting the cartridge or capsule. Protect threads and anchor from damage during anchor installation. Ensure proper embedment and placement in accordance with contract documents and all other work. Do

not disturb or load anchors before manufacturer specified cure time has elapsed.

Adhesives must be stored at temperatures prescribed by the manufacturer and must not be used beyond the expiration date.

3.1.3 Unused or Repairs to Drilled Holes

Any holes made for anchors that are not used must be filled with non-shrink, non metallic grout suitable for the orientation and size of hole and have a minimum compressive strength of 4000 psi. Repair must completely fill hole and be flush with existing concrete or masonry. Place in accordance with manufacturer's recommended instructions. Final anchor positions must not be within1 inch of repair patches.

3.2 EMBEDDED ITEMS

Existing reinforcing bars or other embedded items in the structure may conflict with specified anchor locations. Existing reinforcing and embedded items must not be damaged during installation of post-installed anchors.

The contractor must review the as-built drawings and must use Radar detection systems (such as Hilti Ferroscan), X-Ray, or other appropriate means to accurately locate the position of existing reinforcing bars and embedded items at the locations of the anchors in the field. Scanning method must provide enough accuracy and precision to locate the space between rebar. Structural integrity of existing concrete or masonry must not be impaired by investigating method.

Create a template at each anchor connection location prior to fabricating holes in connection plates. Template must be made by locating existing reinforcing with an approved reinforcement detection system.

3.3 TESTS AND INSPECTIONS

3.3.1 Mechanical Anchors

For mechanical anchors, periodic special inspections are required. Inspections must be in accordance with ICC IBC and the Evaluation Report.

Mechanical Anchors must be inspected during installation, to verify anchor type, anchor dimensions, base material type, drill bit, hole dimensions, hole cleaning procedures, anchor spacing, edge distances, base material thickness, base material age, effective embedment, tightening torque, adherence to the manufacturer's printed installation instructions, and any additional items recommended in the Evaluation Report.

For mechanical anchors whose strength is dependent on a minimum installation torque, the installer under the supervision of the Special Inspector.

ANCHOR	EFFECTIVE EMBEDMENT	CONFINED TENSION PROOF LOAD
	(inches)	(pounds)
Concrete Screw Anchor, 5/8" diameter	4" to 6" in Concrete	1000
Masonry Screw Anchor, 5/8" diameter	4" in Masonry	1000

3.3.2 Adhesive Anchors

For adhesive anchors, periodic special inspection are required as a minimum. Where adhesive anchors are used to resist sustained tension in horizontal or upwardly inclined orientations, or where the findings of the Evaluation Report for the adhesive anchor product require it, continuous special inspection is needed. Inspections must be in accordance with ICC IBC and the Evaluation Report.

Adhesive anchors must be inspected during installation, to verify anchor type, anchor dimensions, base material type, base material age, drill bit, hole dimensions, hole cleaning procedures, anchor spacing, edge distances, base material thickness, effective embedment, tightening torque, adhesive mixing, filling of the hole with adhesive, adherence to the manufacturer's printed installation instructions, and any additional items recommended in the Evaluation Report.

ANCHOR	EFFECTIVE EMBEDMENT	CONFINED TENSION PROOF LOAD
	(inches)	(pounds)
Adhesive anchor, 5/8" diameter rod	4" to 6"	1000
Adhesive anchor, #4 reinforcing bar	4" to 6"	1000

3.3.3 Action Required from Failed Tests/Inspections

Immediately report failed anchor locations and test results to the Contracting Officer. Anchors that fail to meet proof/torque load or installation requirements must be regarded as malfunctioning. Do not re-use holes unless specifically allowed by manufacturer's published instructions and approved by the Post-Installed Anchor Special Inspector.

If any of the tested anchors fail to achieve the specified torque or proof load within the limits of the contract documents, test a minimum of two adjacent anchors for each anchor that fails.

Continuously special inspect and proof load/torque test any replacement anchors.

Fill unused anchor holes and patch failed anchor locations in accordance with this specification. Prior to performing the repair, the Contractor must submit to the Contracting Officer for approval, the proposed fill and patch materials.

Additional tests, repairs, delays, or modification of work to accommodate failed tests will be at no cost to the Government.

3.3.4 Post-Installed Anchor Special Inspections Report

Report the results of all inspections weekly. Submit report as an electronic PDF file to the Contracting Officer for review by the Engineer of Record. The report must include the following:

(1) Exact locations of the inspected and tested work

(2) Inspector's name

(3) Date of inspection

(4) Summary of work completed during the inspection period

(5) Test results

(6) Statement by the Special Inspector that clearly identifies the tested anchors as being acceptable or rejected.

(7) Statement by the Special Inspector confirming that the materials and installation procedures conform with the approved contract documents and the manufacturer's published installation instructions.

3.4 DUST CONTROL

Control dust resulting from demolition to prevent the spread of dust and avoid creation of a nuisance in the surrounding area. Do not use water when it will result in, or create, hazardous or objectionable conditions such as ice, flooding, or pollution.

-- End of Section --

SECTION 05 05 23.16

STRUCTURAL WELDING
08/18

PART 1 GENERAL

1.1 REFERENCES

The publications listed below form a part of this specification to the extent referenced. The publications are referred to within the text by the basic designation only.

AMERICAN INSTITUTE OF STEEL CONSTRUCTION (AISC)

AISC 360	(2016) Specification for Structural Steel Buildings

AMERICAN SOCIETY FOR NONDESTRUCTIVE TESTING (ASNT)

ANSI/ASNT CP-189	(2020) ASNT Standard for Qualification and Certification of Nondestructive Testing Personnel

AMERICAN WELDING SOCIETY (AWS)

AWS A2.4	(2012) Standard Symbols for Welding, Brazing and Nondestructive Examination
AWS D1.1/D1.1M	(2020; Errata 1 2021) Structural Welding Code - Steel
AWS D1.3/D1.3M	(2018) Structural Welding Code - Sheet Steel
AWS D1.4/D1.4M	(2018) Structural Welding Code - Reinforcing Steel
AWS D1.8/D1.8M	(2016) Structural Welding Code—Seismic Supplement
AWS D14.4/D14.4M	(2012) Specification for Welded Joints for Machinery and Equipment
AWS QC1	(2016) Specification for AWS Certification of Welding Inspectors
AWS Z49.1	(2021) Safety in Welding and Cutting and Allied Processes

ASTM INTERNATIONAL (ASTM)

ASTM E165/E165M	(2023) Standard Practice for Liquid Penetrant Examination for General Industry
ASTM E709	(2021) Standard Guide for Magnetic Particle Testing

1.2 SUBMITTALS

Government approval is required for submittals with a "G" or "S" classification. Submittals not having a "G" or "S" classification are for Contractor Quality Control approval. Submittals not having a "G" or "S" classification are for information only. When used, a code following the "G" classification identifies the office that will review the submittal for the Government. Submit the following in accordance with Section 01 33 00 SUBMITTAL PROCEDURES:

SD-01 Preconstruction Submittals

Welding Quality Assurance Plan;

SD-03 Product Data

Welding Procedure Qualifications;

Welder, Welding Operator, and Tacker Qualification

Previous Qualifications

Pre-Qualified Procedures;

Welding Electrodes and Rods

SD-06 Test Reports

Nondestructive Testing

Weld Inspection Log

SD-07 Certificates

Certified Welding Procedure Specifications (WPS)

Certified Brazing Procedure Specifications (BPS)

Certified Procedure Qualification Records (PQR)

Certified Welder Performance Qualifications (WPQ)

Certified Brazer Performance Qualifications (BPQ)

Certified Welding Inspector

Nondestructive Testing Personnel

1.3 QUALITY ASSURANCE

Except for pre-qualified (in accordance with AWS D1.1/D1.1M) and previously qualified procedures, each Contractor performing welding must record in detail and qualify the welding procedure specification for any welding procedure followed in the fabrication of weldments. Conform welding procedure qualifications to AWS D1.1/D1.1M, AWS D1.8/D1.8M and to the specifications in this section. Submit for approval copies of the welding procedure specification and the procedure qualification records for each type of welding being performed. Submission of the welder, welding operator, or tacker qualification test records is also required.

Approval of any procedure, however, does not relieve the Contractor of the sole responsibility for producing a finished structure meeting all the specified requirements. Submit this information on the forms in Annex M of AWS D1.1/D1.1M. Individually identify and clearly reference on the detail drawings and erection drawings all welding procedure specifications, or suitably key them to the contract drawings. In case of conflict between this specification and AWS D1.1/D1.1M, this specification governs.

1.3.1 General Requirements

Fabricate work in an AISC Certified Fabrication Plant, Category BU. Erect work by an AISC Certified Erector, Category CSE.

a. For Structural Projects, provide documentation of the following:

(1) Component Thickness 1/8 inch and greater: Qualification documents (WPS, PQR, and WPQ) in accordance with AWS D1.1/D1.1Mand AWS D1.8/D1.8M.

(2) Component Thickness Less than 1/8 inch: Qualification documents (WPS, PQR, and WPQ) in accordance with AWS D1.3/D1.3M.

(3) Reinforcing Steel: Qualification documents (WPS, PQR, and WPQ) in accordance with AWS D1.4/D1.4M.

b. For other applications, provide documentation of the following:

(1) Submit two copies of the Certified Welding Procedure Specifications (WPS), Certified Brazing Procedure Specifications (BPS) and Certified Procedure Qualification Records (PQR) to the Contracting Officer for review.

(2) Submit two copies of the Certified Welder Performance Qualifications (WPQ)and Certified Brazer Performance Qualifications (BPQ) to the Contracting Officer for review within fifteencalendar days prior to any employee welding on the project material.

(3) Machinery: Qualification documents (WPS, PQR, and WPQ) in accordance with AWS D14.4/D14.4M.

1.3.2 Previous Qualifications

Welding procedures previously qualified by test in accordance with AWS D1.1/D1.1M, may be accepted for this contract without re-qualification, upon receipt of the test results, if the following conditions are met:

a. Testing was performed by an approved testing laboratory, technical consultant, or the Contractor's approved quality control organization.

b. The qualified welding procedure conforms to the requirements of this specification and is applicable to welding conditions encountered under this contract.

c. The welder, welding operator, and tacker qualification tests conform to the requirements of this specification and are applicable to welding conditions encountered under this contract.

1.3.3 Pre-qualified Procedures

Welding procedures which are considered pre-qualified as specified in AWS D1.1/D1.1M will be accepted without further qualification. Submit for approval a listing or an annotated drawing to indicate the joints not pre-qualified. Procedure qualification is mandatory for these joints. No pre-qualified welding procedures are allowed. Qualify the welding procedures and welders by tests prescribed in the applicable code or specification not withstanding the fact the code or specification may allow pre-qualified procedures.

1.3.4 Welder, Welding Operator, and Tacker Qualification

Each welder, welding operator, and tacker assigned to work on this contract must be qualified in accordance with the applicable requirements of AWS D1.1/D1.1M, AWS D1.8/D1.8M and as specified in this section. Welders, welding operators, and tackers who make acceptable procedure qualification test welds will be considered qualified for the welding procedure used within the applicable essential variables for welder qualification.

1.3.4.1 Previous Personnel Qualifications

At the discretion of the Contracting Officer, welders, welding operators, and tackers qualified by test within the previous 6 months may be accepted for this contract without re-qualification if all the following conditions are met:

a. Copies of the welding procedure specifications, the procedure qualification test records, and the welder, welding operator, and tacker qualification test records are submitted and approved in accordance with the specified requirements for detail drawings.

b. Testing was performed by an approved testing laboratory, technical consultant, or the Contractor's approved quality control organization.

c. The welder, welding operator, and tacker qualification tests conform to the requirements of this specification and are applicable to welding conditions encountered under this contract.

1.3.4.2 Certificates

Before assigning any welder, welding operator, or tacker to work under this contract, submit the names and certification that each individual is qualified as specified. State in the certification the type of welding and positions for which the welder, welding operator, or tacker is qualified, the code and procedure under which the individual is qualified, the date qualified, and the name of the firm and person certifying the qualification tests. Keep the certification current, on file, and furnish 3 copies.

1.3.4.3 Renewal of Qualification

Re-qualification of a welder or welding operator is required under any of the following conditions:

a. It has been more than 6 months since the welder or welding operator has used the specific welding process for which he is qualified.

b. There is specific reason to question the welder or welding operator's ability to make welds that meet the requirements of these specifications.

c. The welder or welding operator was qualified by an employer other than those firms performing work under this contract, and a qualification test has not been taken within the past 12 months. Submit as evidence of conformance all records showing periods of employment, name of employer where welder, or welding operator, was last employed, and the process for which qualified.

d. A tacker who passes the qualification test is considered eligible to perform tack welding indefinitely in the positions and with the processes for which he/she is qualified, unless there is some specific reason to question the tacker's ability or there has been a gap greater than 6 months since he/she last used the process. In such a case, the tacker is required to pass the prescribed tack welding test.

1.3.5 Inspector Qualification

Submit certificates indicating that certified welding inspectors meet the requirements of AWS QC1. Submit qualifications for nondestructive testing personnel in accordance with the requirements of ANSI/ASNT CP-189 for Levels I or II in the applicable nondestructive testing method. Level I inspectors must have direct supervision of a Level II inspector.

1.3.6 Symbols and Safety

Use symbols in accordance with AWS A2.4, unless otherwise indicated. Follow safe welding practices and safety precautions during welding in conformance with AWS Z49.1.

PART 2 PRODUCTS

2.1 SYSTEM DESCRIPTION

Conform the design of welded connections to AISC 360, unless otherwise indicated or specified. Material with welds will not be accepted unless the welding is specified or indicated on the drawings or otherwise approved. Perform welding as specified in this section, except where additional requirements are shown on the drawings or are specified in other sections. Do not commence welding until welding procedures, inspectors, nondestructive testing personnel, welders, welding operators, and tackers have been qualified and the submittals approved by the Contracting Officer. Perform all testing at or near the work site. Maintain records of the test results obtained in welding procedure, welder, welding operator, and tacker performance qualifications.

2.1.1 Pre-erection Conference

Hold a pre-erection conference prior to the start of the field welding, to bring all affected parties together and to gain a naturally clear understanding of the project and the Welding Procedure Specifications (WPS) (submitted for all welding, including welding done using pre-qualified procedures). Mandatory attendance is required by all Contractor's welding production and inspection personnel and appropriate Government personnel. Include as items for discussion: responsibilities of various parties; welding procedures and processes to be followed;

welding sequence (both within a joint and joint sequence within the building); inspection requirements and procedures, both visual and nondestructive testing; welding schedule; and other items deemed necessary by the attendees.

2.2 WELDING EQUIPMENT AND MATERIALS

Provide all welding equipment, welding electrodes and rods, welding wire, and fluxes capable of producing satisfactory welds when used by a qualified welder or welding operator. Provide welding equipment and materials that comply with the applicable requirements of AWS D1.1/D1.1M and AWS D1.8/D1.8M. Submit product data on welding electrodes and rods.

PART 3 EXECUTION

3.1 WELDING OPERATIONS

3.1.1 Requirements

Conform workmanship and techniques for welded construction to the requirements of AWS D1.1/D1.1M, AWS D1.8/D1.8M and AISC 360. When AWS D1.1/D1.1M, AWS D1.8/D1.8M and the AISC 360 specification conflict, the requirements of AWS D1.1/D1.1M, AWS D1.8/D1.8M govern.

3.1.2 Identification

Identify all welds in one of the following ways:

a. Submit written records to indicate the location of welds made by each welder, welding operator, or tacker.

b. Identify all work performed by each welder, welding operator, or tacker with an assigned number, letter, or symbol to identify welds made by that individual. The Contracting Officer may require welders, welding operators, and tackers to apply their symbol next to the weld by means of rubber stamp, felt-tipped marker with waterproof ink, or other methods that do not cause an indentation in the metal. Place the identification mark for seam welds adjacent to the weld at 3 foot intervals. Identification with die stamps or electric etchers is not allowed.

3.2 QUALITY CONTROL

Perform testing using an approved inspection or testing laboratory or technical consultant; or if approved, the Contractor's inspection and testing personnel may be used instead of the commercial inspection or testing laboratory or technical consultant. A Certified Welding Inspector must perform visual inspection on 100 percent of all welds. Document this inspection in the Visual Weld Inspection Log. Test 50% of CJP welds using ultrasonic testing per Table 6.2 or 6.3 of AWS D1.1/D1.1M. Randomly test 50% of all PJP and fillet welds or as indicated by magnetic particle or dye penetrant testing. Verify the welds conform to paragraph STANDARDS OF ACCEPTANCE. Conform procedures and techniques for inspection with applicable requirements of AWS D1.1/D1.1M, AWS D1.8/D1.8M, ASTM E165/E165M, and ASTM E709. Submit a Welding Quality Assurance Plan and records of tests and inspections.

3.3 STANDARDS OF ACCEPTANCE

Conform dimensional tolerances for welded construction, details of welds, and quality of welds with the applicable requirements of AWS D1.1/D1.1M, AWS D1.8/D1.8M and the contract drawings. Submit all records of nondestructive testing.

3.3.1 Nondestructive Testing

The welding is subject to inspection and tests in the mill, shop, and field. Inspection and tests in the mill or shop do not relieve the Contractor of the responsibility to furnish weldments of satisfactory quality. When materials or workmanship do not conform to the specification requirements, the Government reserves the right to reject material or workmanship or both at any time before final acceptance of the structure containing the weldment. Any indication of a defect is regarded as a defect, unless re-evaluation by nondestructive methods or by surface conditioning shows that no unacceptable defect is present. Submit all records of nondestructive testing in accordance with paragraph STANDARDS OF ACCEPTANCE.

3.3.2 Destructive Tests

Make all repairs when metallographic specimens are removed from any part of a structure. Employ only qualified welders or welding operators, and use the proper joints and welding procedures, including peening or heat treatment if required, to develop the full strength of the members and joints cut and to relieve residual stress.

3.4 GOVERNMENT INSPECTION AND TESTING

In addition to the inspection and tests performed by the Contractor for quality control, the Government will perform inspection and testing for acceptance to the extent determined by the Contracting Officer. The work may be performed by the Government's own forces or under a separate contract for inspection and testing. The Government reserves the right to perform supplemental nondestructive and destructive tests to determine compliance with paragraph STANDARDS OF ACCEPTANCE.

3.5 CORRECTIONS AND REPAIRS

If inspection or testing indicates defects in the weld joints, repair defective welds using a qualified welder or welding operator as applicable. Conduct corrections in accordance with the requirements of AWS D1.1/D1.1M, AWS D1.8/D1.8M and the specifications. Repair all defects in accordance with the approved procedures. Repair defects discovered between passes before additional weld material is deposited. Wherever a defect is removed and repair by welding is not required, blend the affected area into the surrounding surface to eliminate sharp notches, crevices, or corners. After a defect is thought to have been removed, and before re-welding, examine the area by suitable methods to ensure that the defect has been eliminated. Repaired welds must meet the inspection requirements for the original welds.

-- End of Section --

SECTION 05 50 13

MISCELLANEOUS METAL FABRICATIONS
08/24

PART 1 GENERAL

1.1 REFERENCES

The publications listed below form a part of this specification to the extent referenced. The publications are referred to within the text by the basic designation only.

ALUMINUM ASSOCIATION (AA)

AA DAF45	(2003; Reaffirmed 2009) Designation System for Aluminum Finishes

AMERICAN CONCRETE INSTITUTE (ACI)

ACI 318	(2019; R 2022) Building Code Requirements for Structural Concrete (ACI 318-19) and Commentary (ACI 318R-19)

AMERICAN INSTITUTE OF STEEL CONSTRUCTION (AISC)

ANSI/AISC 303	(2022) Code of Standard Practice for Structural Steel Buildings and Bridges

AMERICAN SOCIETY OF MECHANICAL ENGINEERS (ASME)

ASME B18.2.1	(2012; R 2021) Square, Hex, Heavy Hex, and Askew Head Bolts and Hex, Heavy Hex, Hex Flange, Lobed Head, and Lag Screws (Inch Series)
ASME B18.2.2	(2022) Nuts for General Applications: Machine Screw Nuts, and Hex, Square, Hex Flange, and Coupling Nuts (Inch Series)
ASME B18.6.2	(2020) Square Head Set Screws and Slotted Headless Set Screws (Inch Series)
ASME B18.6.3	(2024) Machine Screws, Tapping Screws, and Metallic Drive Screws (Inch Series)
ASME B18.21.1	(2009; R 2016) Washers: Helical Spring-Lock, Tooth Lock, and Plain Washers (Inch Series)
ASME B18.21.2M	(1999; R 2014) Lock Washers (Metric Series)
ASME B18.22M	(1981; R 2017) Metric Plain Washers

AMERICAN SOCIETY OF SAFETY PROFESSIONALS (ASSP)

ASSP A10.3	(2020) Safety Requirements for Powder-Actuated Fastening Systems American

	National Standard for Construction and Demolition Operations

AMERICAN WELDING SOCIETY (AWS)

AWS D1.1/D1.1M	(2020; Errata 1 2021) Structural Welding Code - Steel
AWS D1.2/D1.2M	(2014; Errata 1 2014; Errata 2 2020) Structural Welding Code - Aluminum

ASTM INTERNATIONAL (ASTM)

ASTM A36/A36M	(2019) Standard Specification for Carbon Structural Steel
ASTM A47/A47M	(1999; R 2022; E 2022) Standard Specification for Ferritic Malleable Iron Castings
ASTM A53/A53M	(2024) Standard Specification for Pipe, Steel, Black and Hot-Dipped, Zinc-Coated, Welded and Seamless
ASTM A123/A123M	(2024) Standard Specification for Zinc (Hot-Dip Galvanized) Coatings on Iron and Steel Products
ASTM A153/A153M	(2023) Standard Specification for Zinc Coating (Hot-Dip) on Iron and Steel Hardware
ASTM A307	(2021) Standard Specification for Carbon Steel Bolts, Studs, and Threaded Rod 60 000 PSI Tensile Strength
ASTM A500/A500M	(2023) Standard Specification for Cold-Formed Welded and Seamless Carbon Steel Structural Tubing in Rounds and Shapes
ASTM A653/A653M	(2023) Standard Specification for Steel Sheet, Zinc-Coated (Galvanized) or Zinc-Iron Alloy-Coated (Galvannealed) by the Hot-Dip Process
ASTM A780/A780M	(2020) Standard Practice for Repair of Damaged and Uncoated Areas of Hot-Dip Galvanized Coatings
ASTM A924/A924M	(2022a) Standard Specification for General Requirements for Steel Sheet, Metallic-Coated by the Hot-Dip Process
ASTM B26/B26M	(2018; E 2018) Standard Specification for Aluminum-Alloy Sand Castings
ASTM B108/B108M	(2019) Standard Specification for Aluminum-Alloy Permanent Mold Castings

ASTM B209/B209M	(2021a) Standard Specification for Aluminum and Aluminum-Alloy Sheet and Plate
ASTM B221	(2021) Standard Specification for Aluminum and Aluminum-Alloy Extruded Bars, Rods, Wire, Profiles, and Tubes
ASTM B221M	(2021) Standard Specification for Aluminum and Aluminum-Alloy Extruded Bars, Rods, Wire, Profiles, and Tubes (Metric)
ASTM C1513	(2018) Standard Specification for Steel Tapping Screws for Cold-Formed Steel Framing Connections
ASTM D1187/D1187M	(1997; R 2018) Standard Specification for Asphalt-Base Emulsions for Use as Protective Coatings for Metal
ASTM E488/E488M	(2022) Standard Test Methods for Strength of Anchors in Concrete Elements
ASTM F1554	(2020) Standard Specification for Anchor Bolts, Steel, 36, 55, and 105-ksi Yield Strength

MASTER PAINTERS INSTITUTE (MPI)

MPI 79	(2016) Primer, Alkyd, Anti-Corrosive for Metal

SOCIETY FOR PROTECTIVE COATINGS (SSPC)

SSPC PA 1	(2024) Shop, Field, and Maintenance Coating of Metals
SSPC SP 3	(2018) Power Tool Cleaning
SSPC SP 6/NACE No.3	(2007) Commercial Blast Cleaning

U.S. ARMY CORPS OF ENGINEERS (USACE)

EM 385-1-1	(2024) Safety -- Safety and Occupational Health (SOH) Requirements

1.2 SUBMITTALS

Government approval is required for submittals with a "G" or "S" classification. Submittals not having a "G" or "S" classification are for Contractor Quality Control approval. Submittals not having a "G" or "S" classification are for information only. When used, a code following the "G" classification identifies the office that will review the submittal for the Government. Submit the following in accordance with Section 01 33 00 SUBMITTAL PROCEDURES:

SD-02 Shop Drawings

Sill Angle, Installation Drawings;

Bollards/Pipe Guards;

Embedded Angles and Plates, Installation Drawings;

SD-03 Product Data

Corner Guards

Cover Plates and Frames;

Window and Door Guards;

Each Downspout Terminations Type;

Recycled Content; S

SD-04 Samples

Expansion Joint Covers

SD-07 Certificates

1.3 QUALIFICATION OF WELDERS

Qualify procedures and personnel according to the following:

a. AWS D1.1/D1.1M Structural Welding Code - Steel.

b. AWS D1.2/D1.2M Structural Welding Code - Aluminum.

1.4 DELIVERY, STORAGE, AND PROTECTION

Protect from corrosion, deformation, and other types of damage. Store items in an enclosed area free from contact with soil and weather. Remove and replace damaged items with new items.

1.5 MISCELLANEOUS REQUIREMENTS

1.5.1 Fabrication Drawings

Submit fabrication drawings showing layout(s), connections to structural system, and anchoring details as specified in ANSI/AISC 303.

1.5.2 Installation Drawings

Submit templates, erection, and installation drawings indicating thickness, type, grade, class of metal, and dimensions. Show construction details, reinforcement, anchorage, and installation in relation to the building construction.

PART 2 PRODUCTS

2.1 SUSTAINABLE DESIGN REQUIREMENTS

See Section 01 33 29 SUSTAINABILITY REQUIREMENTS AND REPORTING for sustainable design requirements for the following, except as modified here:

2.2 MATERIALS

Provide exposed fastenings of compatible materials (avoid contact of dissimilar metals). Coordinate color and finish with the material to which fastenings are applied. Submit the manufacturer's certified mill reports which clearly show the applicable ASTM mechanical and chemical requirements together with the actual test results for the supplied materials.

2.2.1 Structural Carbon Steel

Provide in accordance with ASTM A36/A36M.

2.2.2 Structural Tubing

Provide in accordance with ASTM A500/A500M.

2.2.3 Steel Pipe

Provide in accordance with ASTM A53/A53M, Type E or S, Grade B.

2.2.4 Fittings for Steel Pipe

Provide standard malleable iron fittings in accordance with ASTM A47/A47M.

2.2.5 Anchor Bolts

Provide in accordance with ASTM F1554. Where exposed, provide anchor bolts of the same material, color, and finish as the metal to which they are applied.

2.2.5.1 Expansion Anchors, Sleeve Anchors, Adhesive Anchors

Provide 1/2in. diameter expansion anchors, sleeve anchors, adhesive anchors. Minimum concrete masonry embedment of 4 in. Design values listed are as tested in accordance with ASTM E488/E488M.

a. Provide minimum allowable pullout value of 1000 lb. Calculate pullout capacity according to ACI 318.

b. Provide minimum allowable shear value of 1500 lb. Calculate shear capacity according to ACI 318.

2.2.5.2 Lag Screws and Bolts

Provide in accordance with ASME B18.2.1, type and grade best suited for the purpose.

2.2.5.3 Toggle Bolts

Provide in accordance with ASME B18.2.1.

2.2.5.4 Bolts, Nuts, Studs and Rivets

Provide in accordance with ASME B18.2.2 or ASTM A307.

2.2.5.5 Powder Actuated Fasteners

Follow safety provisions in accordance with ASSP A10.3.

2.2.5.6 Screws

Provide in accordance with ASME B18.2.1, ASME B18.6.2, ASME B18.6.3 and ASTM C1513.

2.2.5.7 Washers

Provide plain washers in accordance with ASME B18.22M, ASME B18.21.1. Provide beveled washers for American Standard beams and channels, square or rectangular, tapered in thickness, and smooth. Provide lock washers in accordance with ASME B18.21.2M, ASME B18.21.1.

2.2.6 Aluminum Alloy Products

Provide in accordance with ASTM B209/B209M for sheet plate, ASTM B221M, ASTM B221M, ASTM B221 for extrusions, and ASTM B26/B26M or ASTM B108/B108M for castings. Provide aluminum extrusions at least 1/8 inch thick and aluminum plate or sheet at least 0.050 inch thick.

2.3 FABRICATION FINISHES

2.3.1 Galvanizing

Hot-dip galvanize items specified to be zinc-coated, after fabrication where practicable. Provide galvanizing in accordance with ASTM A123/A123M, ASTM A153/A153M, ASTM A653/A653M, or ASTM A924/A924M, Z275 G90.

2.3.2 Galvanize

Anchor bolts, grating fasteners, washers, and parts or devices necessary for proper installation, unless indicated otherwise.

2.3.3 Repair of Zinc-Coated Surfaces

Repair damaged surfaces with galvanizing repair method and paint in accordance with ASTM A780/A780M or by application of stick or thick paste material specifically designed for repair of galvanizing, as approved by Contracting Officer. Clean areas to be repaired and remove slag from welds. Heat, with a torch, surfaces to which stick or paste material will be applied. Heat to a temperature sufficient to melt the metals in the stick or paste. Spread molten material uniformly over surfaces to be coated and wipe off excess material.

2.3.4 Shop Cleaning and Painting

2.3.4.1 Surface Preparation

Blast clean surfaces in accordance with SSPC SP 6/NACE No.3. Surfaces that will be exposed in spaces above ceiling or in attic spaces, crawl spaces, furred spaces, and chases may be cleaned in accordance with SSPC SP 3 in lieu of being blast cleaned. Wash cleaned surfaces which become contaminated with rust, dirt, oil, grease, or other contaminants with solvents until thoroughly clean. Steel to be embedded in concrete must be free of dirt and grease prior to embed. Do not paint or galvanize bearing surfaces, including contact surfaces within slip critical joints. Shop coat these surfaces with rust prevention.

2.3.4.2 Pretreatment, Priming and Painting

Apply pre-treatment, primer, and paint in accordance with manufacturer's printed instructions. On surfaces concealed in the finished construction or not accessible for finish painting, apply an additional prime coat to a minimum dry film thickness of 1.0 mil. Tint additional prime coat with a small amount of tinting pigment.

2.3.5 Nonferrous Metal Surfaces

Protect by plating, anodic, or organic coatings.

2.3.6 Aluminum Surfaces

2.3.6.1 Surface Condition

Before finishes are applied, remove roll marks, scratches, rolled-in scratches, kinks, stains, pits, orange peel, die marks, structural streaks, and other defects which will affect uniform appearance of finished surfaces.

2.3.6.2 Aluminum Finishes

Unexposed sheet, plate and extrusions may have mill finish as fabricated. Sandblast castings' finish, medium, AA DAF45. Unless otherwise specified, provide all other aluminum items with an anodized finish. Provide a coating thickness not less than that specified for protective and decorative type finishes for items used in interior locations or architectural Class I type finish for items used in exterior locations. Provide in accordance with AA DAF45. Provide a polished satin finish on items to be anodized.

2.4 CORNER GUARDS

For jambs and sills of openings and edges of platforms provide steel shapes and plates anchored in masonry or concrete with welded steel straps or end-weld stud anchors. Where indicated, form corner guards with glazed or ceramic tile finish on walls with 0.0625 inch thick corrosion-resisting steel with satin finish, extend 5 feet above the top of cove base or to the top of the wainscot, whichever is less, and securely anchor to the supporting wall. Provide galvanized corner guards on exterior. Provide interior corner guards as indicated in Section 10 26 00 WALL AND DOOR PROTECTION.

2.5 COVER PLATES AND FRAMES

Where indicated, fabricate cover plates of 1/4 inch thick rolled steel weighing not more than 100 pounds per plate. Provide structural steel shapes and plates for frames, with bent steel bars or headed anchors welded to frame for anchoring to concrete securely fastened to the structure. Miter and weld all corners. Butt joint straight runs. Allow for expansion on straight runs over 15 feet. Provide holes for lifting tools. Provide flush drop handles for removal where indicated; form from 1/4 inch round stock. Provide holes and openings with 1/2 inch clearance for pipes and equipment. Remove sharp edges and burrs from cover plates and exposed edges of frames. Weld all connections and grind top surface smooth. Weld bar stops every 6 inches. Provide 1/8 inch clearance at edges and between cover plate and frames after fabrication.

2.6 MISCELLANEOUS PLATES AND SHAPES

Submit installation drawings for and provide items that do not form a part of the structural steel framework, such as lintels, sill angles, and miscellaneous mountings and frames. Provide lintels fabricated from structural steel shapes over openings in masonry walls and partitions as indicated and as required to support wall loads over openings. Provide with connections and fasteners welds. Construct to have at least 8 in bearing on masonry at each end.

Provide angles and plates in accordance with ASTM A36/A36M, for embedment as indicated. Galvanize embedded items exposed to the elements in accordance with ASTM A123/A123M.

PART 3 EXECUTION

3.1 GENERAL INSTALLATION REQUIREMENTS

Install items at locations indicated in accordance with manufacturer's instructions. Verify all field dimensions prior to fabrication. Include materials and parts necessary to complete each assembly, whether indicated or not. Miss-alignment and miss-sizing of holes for fasteners is cause for rejection. Conceal fastenings where practicable. Joints exposed to weather must be watertight.

3.2 WORKMANSHIP

Provide miscellaneous metalwork that is true and accurate in shape, size, and profile. Make angles and lines continuous and straight. Make curves consistent, smooth and unfaceted. Provide continuous welding along the entire area of contact except where tack welding is permitted. Do not tack weld exposed connections. Unless otherwise indicated and approved, provide a smooth finish on exposed surfaces. Provide countersunk rivets where exposed. Provide coped and mitered corner joints aligned flush and without gaps. Do not weld, cut or abrade surfaces of exterior units that have been hot-dip galvanized after fabrication and are bolted or screwed field connections.

3.3 ANCHORAGE, FASTENINGS, AND CONNECTIONS

Provide anchorage as necessary, whether indicated or not, for fastening miscellaneous metal items securely in place. Include slotted inserts, expansion shields, powder-driven fasteners, toggle bolts (when approved for concrete), through bolts for masonry, headed shear studs, machine and carriage bolts for steel, through bolts, lag bolts, and screws for wood. Do not use wood plugs. Provide non-ferrous attachments for non-ferrous metal. Provide exposed fastenings of compatible materials (avoid contact of dissimilar metals), that generally match in color and finish the surfaces to which they are applied. Conceal fastenings where practicable. Provide all fasteners flush with the surfaces they fasten, unless indicated otherwise.

3.4 BUILT-IN WORK

Where necessary and not otherwise indicated, form built-in metal work for anchorage with concrete or masonry. Provide built-in metal work in ample time for securing in place as the work progresses.

3.5 WELDING

Perform welding, welding inspection, and corrective welding in accordance with AWS D1.1/D1.1M. Use continuous welds on all exposed connections. Grind visible welds smooth in the finished installation. Provide welded headed shear studs in accordance with AWS D1.1/D1.1M, Clause 7, except as otherwise specified. Provide in accordance with the safety requirements of EM 385-1-1.

3.6 DISSIMILAR METALS

Where dissimilar metals are in contact, protect surfaces with a coating in accordance with MPI 79 to prevent galvanic or corrosive action. Where aluminum is in contact with concrete, plaster, mortar, masonry, wood, or absorptive materials subject to wetting, protect in accordance with ASTM D1187/D1187M, asphalt-base emulsion. Clean surfaces with metal shavings from installation at the end of each work day.

3.7 PREPARATION

3.7.1 Material Coatings and Surfaces

Remove rust preventive coating just prior to field erection, using a remover approved by the metal manufacturer. Surfaces, when assembled, must be free of rust, grease, dirt and other foreign matter.

3.7.2 Environmental Conditions

Do not clean or paint surfaces when damp or exposed to foggy or rainy weather, when metallic surface temperature is less than minus 5 degrees F above the dew point of the surrounding air, or when surface temperature is below 45 degrees F or over 95 degrees F, unless approved by the Contracting Officer. Metal surfaces to be painted must be dry for a minimum of 48 hours prior to the application of primer or paint.

3.8 COVER PLATES AND FRAMES

Provide tops of cover plates and frames flush with finished surface. Test for trip hazards and adjust for any encountered lippage.

3.9 BAR-GRILLE WINDOW GUARDS

Securely anchor bar-grille window guards to masonry with 1/2 inch diameter prison-type screws or bolts and expansion shields, or other type of fastenings if the ends of such fastenings are welded to the adjoining metal grilles or otherwise made tamperproof in manner as approved by the Contracting Officer. Spanner-head screws or bolts are not considered prison-type fasteners.

3.10 DIAMOND MESH WINDOW AND DOOR GUARDS

Provide diamond mesh window guards on interior window frames with not less than two tamperproof hinged butts mounted on wood jambs. exterior of window frames with not less than two tamperproof hinged butts mounted on 1 by 12 by 1/8 inch jamb channel attached to 2 by 1/4 inch plate anchored to wood jambs with 1/4 inch lag bolt, to masonry jamb with toggle bolts, or to concrete jambs and solid masonry jambs with expansion shields and bolts. Provide one additional butt for each 3 foot internal length of guard over 5 feet. Install hasp and padlock jamb opposite the hinged side.

3.11 INSTALLATION MISCELLANEOUS PLATES AND SHAPES

Provide lintels fabricated from structural steel shapes over openings in masonry walls and partitions as indicated and as required to support wall loads over openings. Provide with connections and fasteners welds. Construct to have at least 8 inches bearing on masonry at each end.

3.12 REPAIRS

a. Touchup Painting:

(1) Immediately after erection, clean field welds, bolted connections, and abraded areas. Paint uncoated and abraded areas with same material as used for shop painting to comply with SSPC PA 1 for touching up shop-painted surfaces.

b. Galvanized Surfaces:

(1) Clean field welds, bolted connections, and abraded areas and repair galvanizing to comply with ASTM A780/A780M.

-- End of Section --

SECTION 05 50 14

STRUCTURAL METAL FABRICATIONS
08/18

PART 1 GENERAL

1.1 REFERENCES

The publications listed below form a part of this specification to the extent referenced. The publications are referred to within the text by the basic designation only.

ALUMINUM ASSOCIATION (AA)

AA ADM	(2020) Aluminum Design Manual

AMERICAN SOCIETY FOR NONDESTRUCTIVE TESTING (ASNT)

ANSI/ASNT CP-189	(2020) ASNT Standard for Qualification and Certification of Nondestructive Testing Personnel

AMERICAN SOCIETY OF MECHANICAL ENGINEERS (ASME)

ASME B4.1	(1967; R 1994; R 2004; R 2009; R 2020) Preferred Limits and Fits for Cylindrical Parts

AMERICAN WELDING SOCIETY (AWS)

AWS D1.1/D1.1M	(2020; Errata 1 2021) Structural Welding Code - Steel
AWS D1.2/D1.2M	(2014; Errata 1 2014; Errata 2 2020) Structural Welding Code - Aluminum
AWS QC1	(2016) Specification for AWS Certification of Welding Inspectors

ASTM INTERNATIONAL (ASTM)

ASTM D962	(1981; R 2014) Aluminum Powder and Paste Pigments for Paints
ASTM E165/E165M	(2023) Standard Practice for Liquid Penetrant Examination for General Industry
ASTM E709	(2021) Standard Guide for Magnetic Particle Testing
ASTM F3125/F3125M	(2019) Standard Specification for High Strength Structural Bolts and Assemblies, Steel and Alloy Steel, Heat Treated, Inch Dimensions 120 ksi and 150 ksi Minimum Tensile Strength, and Metric Dimensions 830 MPa and 1040 MPa Minimum Tensile Strength

RESEARCH COUNCIL ON STRUCTURAL CONNECTIONS (RCSC)

RCSC A348	(2020) RCSC Specification for Structural Joints Using High-strength Bolts

1.2 SUBMITTALS

Government approval is required for submittals with a "G" or "S" classification. Submittals not having a "G" or "S" classification are for Contractor Quality Control approval. Submittals not having a "G" or "S" classification are for information only. When used, a code following the "G" classification identifies the office that will review the submittal for the Government. Submit the following in accordance with Section 01 33 00 SUBMITTAL PROCEDURES:

SD-02 Shop Drawings

Detail Drawings;

Welding Procedures;

Welding Repair Plan

Castings

SD-03 Product Data

Filler Metal

Lubricant

SD-06 Test Reports

Tests, Inspections, and Verifications

SD-07 Certificates

Welding Qualifications

Application Qualification for Steel Studs;

Welding of Aluminum

Weld Inspection Log

Certified Welding Inspector

Nondestructive Testing Personnel

1.3 QUALITY ASSURANCE

1.3.1 Detail Drawings

Submit detail drawings for metalwork and machine work, prior to fabrication, include within the detail drawings catalog cuts, templates, fabrication and assembly details and type, grade and class of material as appropriate. Indicate methods of protecting the work during shipping, storage, field assembly, and installation.

1.3.2 Welding Qualifications

Prior to welding, submit certification for each welder stating the type of welding and positions qualified for, the code and procedure qualified under, date qualified, and the firm and individual certifying the qualification tests. If the qualification date of the welder or welding operator is more than 6 months old, accompany the welding operator's qualification certificate with a current certificate by the welder attesting to the fact that he has been engaged in welding since the date of certification, with no break in welding service greater than 6 months.

Conform to all requirements specified in AWS D1.1/D1.1M and AA ADM or AWS D1.2/D1.2M.

PART 2 PRODUCTS

2.1 FABRICATION

2.1.1 Structural Fabrication

Material must be straight before being laid off or worked. Perform straightening, if necessary, by methods that will not impair the metal. Sharp kinks or bends are cause for rejection of the material. Material with welds will not be accepted except where welding is definitely specified, indicated or otherwise approved. Make bends using approved dies, press brakes or bending rolls. Where heating is required, take precautions to avoid overheating the metal and allow it to cool in a manner that will not impair the original properties of the metal. Proposed flame cutting of material, other than structural steel, is subject to approval and must be indicated on detail drawings. Shearing must be accurate and all portions of the work neatly finished. Make corners square and true unless otherwise shown. Fillet re-entrant cuts to a minimum radius of 3/4 inch unless otherwise approved. Provide finished members free of twists, bends and open joints. Tighten bolts, nuts and screws.

2.1.1.1 Dimensional Tolerances for Structural Work

Measure dimensions using an approved calibrated steel tape of approximately the same temperature as the material being measured. The overall dimensions of an assembled structural unit must be within the tolerances indicated on the drawings or as specified in the particular section of these specifications for the item of work. Where tolerances are not specified in other sections of these specifications or shown, an allowable variation of 1/32 inch is permissible in the overall length of component members with both ends milled; component members without milled ends must not deviate from the dimensions shown by more than 1/16 inch for members 30 feet or less in length, and by more than 1/8 inch for members over 30 feet in length.

2.1.1.2 Structural Steel Fabrication

Structural steel may be cut by mechanically guided or hand-guided torches, provided an accurate profile with a surface that is smooth and free from cracks and notches is obtained. Prepare surfaces and edges in accordance with AWS D1.1/D1.1M, Prequalification of WPSs Clause. Where structural steel is not to be welded, chipping or grinding will not be required except as necessary to remove slag and sharp edges of mechanically guided

or hand-guided cuts not exposed to view. Chip, grind or machine to sound metal hand-guided cuts which are to be exposed or visible.

2.1.1.3 Structural Aluminum Fabrication

Lay out and cut aluminum in accordance with the AA ADM, Section 6.

2.1.2 Welding

2.1.2.1 Welding of Structural Steel

2.1.2.1.1 Welding Procedures for Structural Steel

Use prequalied welding procedures for structural steel as described in AWS D1.1/D1.1M, Prequalification of WPSs Clause or qualify by tests as prescribed in AWS D1.1/D1.1M, Qualification Clause. For welding procedures qualified by tests, the coupon welding and specimen testing will be witnessed and the test report document signed by the Contracting Officer. Approval of any welding procedure does not relieve the Contractor of the responsibility for producing a finished structure meeting all requirements of these specifications. The Contractor will be directed or authorized to make any changes in previously approved welding procedures that are deemed necessary or desirable by the Contracting Officer.

a. Submit a complete schedule of welding procedures for each steel structure to be welded prior to commencing fabrication. Provide the schedule in conformance with the requirements specified in the provisions of AWS D1.1/D1.1M

b. Provide within the schedule detailed procedure specifications and tables or diagrams showing the procedures to be used for each required joint. Include in the welding procedures filler metal, preheat, interpass temperature and stress-relief heat treatment requirements. Clearly identify each welding procedure as being prequalified or required to be qualified by tests.

c. Show types and locations of welds designated or in the specifications to receive nondestructive testing in the welding procedures.

2.1.2.1.2 Welding Process

Perform welding of structural steel by an electric arc welding process using a method which excludes the atmosphere from the molten metal and conforms to the applicable provisions of AWS D1.1/D1.1M. Minimize residual stresses, distortion and shrinkage from welding.

2.1.2.1.3 Welding Technique

2.1.2.1.3.1 Filler Metal

Provide the electrode, electrode-flux combination and grade of filler metal conforming to the appropriate AWS specification for the base metal and welding process being used or be as shown where a specific choice of AWS specification allowables is required. Submit filler metal product data. Include the AWS designation of the electrodes to be used in the schedule of welding procedures. Use only low hydrogen electrodes for manual shielded metal-arc welding regardless of the thickness of the steel. Use a controlled temperature storage oven at the job site as

prescribed by AWS D1.1/D1.1M, Fabrication Clause to maintain low moisture of low hydrogen electrodes.

2.1.2.1.3.2 Preheat and Interpass Temperature

Perform preheating as required by AWS D1.1/D1.1M, Fabrication Clause or as otherwise specified except that the temperature of the base metal must be at least 70 degrees F. Slowly and uniformly preheat the joint area by approved means to the prescribed temperature, held at that temperature until the welding is completed and then permitted to cool slowly in still air.

2.1.2.1.3.3 Stress-Relief Heat Treatment

Where stress relief heat treatment is specified or shown, perform in accordance with the requirements of AWS D1.1/D1.1M, Fabrication Clause unless otherwise authorized or directed.

2.1.2.1.4 Workmanship

Perform welding workmanship in accordance with AWS D1.1/D1.1M, Fabrication Clause and other applicable requirements of these specifications.

2.1.2.1.4.1 Preparation of Base Metal

Prior to welding inspect surfaces to be welded to ensure compliance with AWS D1.1/D1.1M, Fabrication Clause.

2.1.2.1.4.2 Temporary Welds

Make temporary welds, required for fabrication and erection, under the controlled conditions prescribed for permanent work. Make temporary welds using low-hydrogen welding electrodes and by welders qualified for permanent work as specified in these specifications. Conduct preheating for temporary welds as required by AWS D1.1/D1.1M for permanent welds except that the minimum temperature must be 120 degrees F in any case. In making temporary welds, do not strike arcs in other than weld locations. Remove each temporary weld and grind flush with adjacent surfaces after serving its purpose.

2.1.2.1.4.3 Tack Welds

Tack welds that are to be incorporated into the permanent work are to exhibit the same quality requirements as the permanent welds; clean and thoroughly fuse them with permanent welds. Perform preheating as specified above for temporary welds. Provide cascaded ends on multiple-pass tack welds. Remove defective tack welds before permanent welding.

2.1.2.2 Welding of Steel Castings

Remove unsound material from the surfaces of steel castings, to be incorporated into welded connections, by chipping, machining, air-arc gouging or grinding. Do not weld major connections designed for transfer of stresses if the temperature of the casting is lower than 100 degrees F. Preheat castings containing over 0.35 percent carbon or over 0.75 percent manganese to a temperature not to exceed 450 degrees F and conduct welding while the castings are maintained at a temperature above 350 degrees F. Welding is not permitted on castings containing carbon in excess of 0.45

percent except on written authorization. Castings requiring welding repairs after the first annealing and castings involving welding fabrication must be stress-relieved annealed prior to receiving final machining unless otherwise permitted.

2.1.2.3 Welding of Steel Studs

Welding of steel studs must conform to the requirements of AWS D1.1/D1.1M, Stud WeldingClause, except as otherwise specified for the procedures for welding steel studs to structural steel, including mechanical, workmanship, technique, stud application qualification, production quality control and fabrication and verification inspection procedures.

2.1.2.3.1 Production Control

Production control of stud welding must conform to the requirements of AWS D1.1/D1.1M, Stud Welding Clause, except as otherwise specified for quality control for production welding of studs. Weld studs on which pre-production testing is to be performed must be in the same general position as required on production studs (flat, vertical, overhead or sloping). If the reduction of the length of studs becomes less than normal as they are welded, stop welding immediately and do not resume until the cause has been corrected.

2.1.2.4 Welding of Aluminum

Welding of aluminum must conform to the requirements of AA ADM and AWS D1.2/D1.2M. Submit a certified report giving the results of the qualifying tests, and a complete schedule of the welding process for each aluminum fabrication to be welded prior to commencing fabrication.

2.1.3 Bolted Connections

2.1.3.1 Bolted Structural Steel Connections

Provide bolts, nuts and washers of the type specified or indicated. Equip all nuts with washers except for high strength bolts. Use beveled washers where bearing faces have a slope of more than 1:20 with respect to a plane normal to the bolt axis. Where the use of high strength bolts is specified or indicated, conform the materials, workmanship and installation to the applicable provisions of ASTM F3125/F3125M. Install High Strength Bolts ASTM F3125/F3125M Grade A325 or Grade A490 in accordance with the requirements of RCSC A348. All High Strength Bolted Connections are fully pretensioned to the minimum pretension as specified in RCSC A348. Follow the pre-installation verification procedures outlined in RCSC A348. All other bolted connections are snug tight in accordance with RCSC A348.

a. Accurately locate bolt holes, smooth, perpendicular to the member and cylindrical.

b. Drill or subdrill holes for regular bolts and ream in the shop and not more than 1/16 inch larger than the diameter of the bolt.

c. Match-ream or drill holes for fitted bolts in the shop. Remove burrs resulting from reaming. Keep bolt threads entirely outside of the holes. The body diameter of bolts must have tolerances as recommended by ASME B4.1 for the class of fit specified. Place fitted bolts in reamed holes by selective assembly to provide an LN-2 fit.

d. Holes for high strength bolts must not have diameters more than 1/16 inch larger than bolt diameters. If the thickness of the material is not greater than the diameter of the bolts, the holes may be punched. If the thickness of the material is greater than the diameter of the bolts the holes may be drilled full size or subpunched or subdrilled at least 1/8 inch smaller than the diameter of the bolts and then reamed to full size. Poor matching of holes will be cause for rejection. Drifting occurring during assembly cannot distort the metal or enlarge the holes. Reaming to a larger diameter of the next standard size bolt will be allowed for slight mismatching.

2.2 TESTS, INSPECTIONS, AND VERIFICATIONS

Perform material tests and analyses certified by an approved laboratory to demonstrate that materials are in conformity with the specifications. These tests and analyses must be performed and certified at the Contractor's expense. Perform tests, inspections, and verifications conforming to the requirements of the particular sections of these specifications for the respective items of work unless otherwise specified or authorized. Conduct tests in the presence of the Contracting Officer if so required. Furnish specimens and samples for additional independent tests and analyses upon request by the Contracting Officer. Properly label specimens and samples and prepare for shipment. Submit certified test reports for materials with all materials delivered to the site.

2.2.1 Nondestructive Testing

When doubt exists as to the soundness of any material part, such part may be subjected to any form of nondestructive testing determined by the Contracting Officer. This may include ultrasonic, magnaflux, dye penetrant, x-ray, gamma ray or any other test that will thoroughly investigate the part in question. The cost of such investigation will be borne by the Government if the part is found to be sound and by the Contractor if the part is found to be defective. Any defects will be cause for rejection; replace and retest rejected parts at the Contractor's expense.

2.2.2 Inspection of Structural Steel Welding

Nondestructive testing of designated welds will be required. Supplemental examination of any joint or coupon cut from any location in any joint may also be required.

2.2.2.1 Visual Examination

All visual inspection will be conducted in accordance with AWS D1.1/D1.1M, by a Certified Welding Inspector. Document this inspection in the Visual Weld Inspection Log. Submit certificates indicating that certified welding inspectors meet the requirements of AWS QC1.

2.2.2.2 Nondestructive Testing

Perform as designated or described in the sections of these specifications, the nondestructive testing of shop and field welds covering the particular items of work. Record final nondestructive testing results in the Weld Inspection Log which identifies final NDT inspection of all welds requiring inspection and submit the log.

2.2.2.2.1 Testing Agency

The nondestructive testing of welds and the evaluation of tests as to the acceptability of the welds must be performed by a testing agency adequately equipped and competent to perform such services or by the Contractor using suitable equipment and qualified personnel. All personnel performing nondestructive testing must be certified Level I or II in the method of NDT being utilized in accordance with ANSI/ASNT CP-189. Level I inspectors must have direct supervision of a Level II inspector. Submit certification for nondestructive testing personnel prior to all testing. In either case, written approval of the examination procedures is required and performance of the examination tests must be done in the presence of the Contracting Officer. The evaluation of tests are subject to the approval and all records become the property of the Government.

2.2.2.2.2 Examination Procedures

Conform to the following requirements.

2.2.2.2.2.1 Ultrasonic Testing

Examine, evaluate and report ultrasonic testing of welds in conformance to the requirements of AWS D1.1/D1.1M, Inspection Clause, for statically cyclically loaded connections. Provide ultrasonic equipment capable of making a permanent record of the test indications. Make a record of each weld tested.

2.2.2.2.2.2 Magnetic Particle Inspection

Conform magnetic particle inspection of welds to the applicable provisions of ASTM E709.

2.2.2.2.2.3 Dye Penetrant Inspection

Perform dye penetrant inspection of welds conforming to the applicable provisions of ASTM E165/E165M.

2.2.2.2.3 Welds to be Subject to Nondestructive Testing

Test 50% of CJP welds using ultrasonic testing per Table 6.2 or6.3 of AWS D1.1/D1.1M. Randomly test 50% of all PJP and fillet welds or as indicated by magnetic particle or dye penetrant testing.

2.2.2.3 Test Coupons

The Government reserves the right to require the Contractor to remove coupons from completed work when doubt as to soundness cannot be resolved by nondestructive testing. When coupons are removed from any part of a structure, repair the members cut in a neat manner with joints of the proper type to develop the full strength of the members. Peen repaired joints as approved or directed to relieve residual stress. The expense for removing and testing coupons, repairing cut members and the nondestructive testing of repairs is borne by the Government or the Contractor in accordance with the Contract Clauses INSPECTION AND ACCEPTANCE.

2.2.2.4 Supplemental Examination

When the soundness of any weld is suspected of being deficient due to

faulty welding or stresses that might occur during shipment or erection, the Government reserves the right to perform nondestructive supplemental examinations before final acceptance. The cost of such inspection will be borne by the Government.

2.2.3 Welding Repair Plan

Repair defective welds in accordance with AWS D1.1/D1.1M, Fabrication Clause. Remove defective weld metal to sound metal by use of air carbon-arc or oxygen gouging. Thoroughly clean surfaces before welding. Retest welds that have been repaired by the same methods used in the original inspection. Except for the repair of members cut to remove test coupons and found to have acceptable welds costs of repairs and retesting will be borne by the Contractor. Submit welding repair plans for steel, prior to making repairs.

2.2.4 Inspection and Testing of Steel Stud Welding

Perform fabrication and verification inspection and testing of steel stud welding conforming to the requirements of AWS D1.1/D1.1M, Welding Clause except as otherwise specified. The Contracting Officer will serve as the verification inspector. Bend or torque test one stud in every 100, including studs that do not show a full 360 degree weld flash, have been repaired by welding or whose reduction in length due to welding is less than normal as required by AWS D1.1/D1.1M, Stud Welding Clause. If any of these studs fail, bend or torque test two additional studs. If either of the two additional studs fails, all of the studs represented by the tests will be rejected. Studs that crack under testing in the weld, base metal or shank will be rejected and replaced by the Contractor at no additional cost.

PART 3 EXECUTION

3.1 INSTALLATION

Thoroughly clean all parts to be installed. Remove packing compounds, rust, dirt, grit and other foreign matter. Clean holes and grooves for lubrication. Examine enclosed chambers or passages to make sure that they are free from damaging materials. Where units or items are shipped as assemblies they will be inspected prior to installation. Disassembly, cleaning and lubrication will not be required except where necessary to place the assembly in a clean and properly lubricated condition. Do not use pipe wrenches, cold chisels or other tools likely to cause damage to the surfaces of rods, nuts or other parts used for assembling and tightening parts. Tighten bolts and screws firmly and uniformly but take care not to overstress the threads. When a half nut is used for locking a full nut place the half nut first followed by the full nut. Lubricate threads of all bolts except high strength bolts, nuts and screws with an appropriate lubricant before assembly. Coat threads of corrosion-resisting steel bolts and nuts with an approved antigalling compound. Driving and drifting bolts or keys will not be permitted.

3.1.1 Alignment and Setting

Accurately align each machinery or structural unit by the use of steel shims or other approved methods so that no binding in any moving parts or distortion of any member occurs before it is fastened in place. The alignment of all parts with respect to each other must be true within the respective tolerances required. Set true machines to the elevations shown.

3.1.2 Blocking and Wedges

Remove all blocking and wedges used during installation for the support of parts to be grouted in foundations before final grouting unless otherwise directed. Blocking and wedges left in the foundations with approval must be of steel or iron.

3.1.3 Foundations and Grouting

Provide concrete subbases and frames and final grout under parts of machines in accordance with the procedures as specified in Section 03 30 53 MISCELLANEOUS CAST-IN-PLACE CONCRETE.

3.2 TESTS

3.2.1 Workmanship

Workmanship must be of the highest grade and in accordance with the best modern practices to conform with the specifications for the item of work being furnished.

3.2.2 Production Welding

Perform production welding conforming to the requirements of AWS D1.1/D1.1M or AWS D1.2/D1.2M, as applicable. Studs, on which pre-production testing is to be performed, must be welded in the same general position as required on production items (flat, vertical, overhead or sloping). Test and production stud welding will be subjected to visual examination or inspection. If the reduction of the length of studs becomes less than normal as they are welded, stop welding immediately and do not resume until the cause has been corrected.

3.3 PROTECTION OF FINISHED WORK

3.3.1 Machined Surfaces

Thoroughly clean foreign matter off machined surfaces. Protect all finished surfaces. Oil and wrap unassembled pins and bolts with moisture resistant paper or protect them by other approved means. Wash finished surfaces of ferrous metals to be in bolted contact, with an approved rust inhibitor and coat them with an approved rust resisting compound for temporary protection during fabrication, shipping and storage periods. Paint finished surfaces of metals which will be exposed after installation, except corrosion resisting steel or nonferrous metals as specified in Section 09 97 02 PAINTING: HYDRAULIC STRUCTURES.

3.3.2 Lubrication After Assembly

After assembly fill all lubricating systems with the appropriate lubricant and apply additional lubricant at intervals as required to maintain the equipment in satisfactory condition until acceptance of the work.

3.3.3 Aluminum

Protect aluminum that will be in contact with grout or concrete from galvanic or corrosive action, with a coat of zinc-chromate primer and a coat of aluminum paint. Protect aluminum in contact with structural steel against galvanic or corrosive action with a coat of zinc-chromate primer

and a coat of aluminum paint. Provide aluminum paint consisting of a aluminum paste conforming to ASTM D962, spar varnish and thinner compatible with the varnish. Field mix the aluminum paint in proportion of 2 pounds of paste, not more than one gallon of spar varnish and not more than one pint of thinner.

-- End of Section --

P2# 519087 - DSSC DLA Repair Building 27
Columbus, OH

SECTION 05 52 00

METAL RAILINGS
08/23

PART 1 GENERAL

1.1 REFERENCES

The publications listed below form a part of this specification to the extent referenced. The publications are referred to within the text by the basic designation only.

AMERICAN INSTITUTE OF STEEL CONSTRUCTION (AISC)

AISC 325	(2017) Steel Construction Manual
AISC 326	(2009) Detailing for Steel Construction

AMERICAN SOCIETY OF CIVIL ENGINEERS (ASCE)

ASCE 7-22	(2022; Supp 1 2023; Supp 2 2023; Supp 3 2025) Minimum Design Loads and Associated Criteria for Buildings and Other Structures

AMERICAN WELDING SOCIETY (AWS)

AWS A2.4	(2012) Standard Symbols for Welding, Brazing and Nondestructive Examination
AWS D1.1/D1.1M	(2025) Structural Welding Code - Steel

ASTM INTERNATIONAL (ASTM)

ASTM B26/B26M	(2018; E 2018) Standard Specification for Aluminum-Alloy Sand Castings

1.2 ADMINISTRATIVE REQUIREMENTS

1.2.1 Preinstallation Meetings

Within 30 days of contract award, submit fabrication drawings to the Contracting Officer for the following items:

a. Steel railings and handrails

b. Anchorage and fastening systems

Submit manufacturer's catalog data, including two copies of manufacturers specifications, load tables, dimension diagrams, and anchor details for the following items:

a. Steel railings and handrails

b. Anchorage and fastening systems

1.3 SUBMITTALS

Government approval is required for submittals with a "G" or "S" classification. Submittals not having a "G" or "S" classification are for information only. When used, a code following the "G" classification identifies the office that will review the submittal for the Government. Submit the following in accordance with Section 01 33 00 SUBMITTAL PROCEDURES:

SD-02 Shop Drawings

Fabrication Drawings; G,

Iron and Steel Hardware; G,

Steel Shapes, Plates, Bars and Strips; G,

SD-03 Product Data

Concrete Inserts; G,

Masonry Anchorage Devices; G,

Protective Coating; G,

Steel Railings and Handrails; G,

Aluminum Railings and Handrails; G,

Anchorage and Fastening Systems; G,

SD-05 Design Data

Design Calculations For Steel Connections; G

SD-06 Test Reports

Welding Inspections; G

Mill Test Reports; G

SD-07 Certificates

Welder Qualification; G,

SD-08 Manufacturer's Instructions

Installation Instructions

1.4 QUALITY CONTROL

1.4.1 Welding Procedures

Section 05 05 23.16 STRUCTURAL WELDING applies to work specified in this section.

Submit results of welding inspections testing in accordance with AWS D1.1/D1.1M by an approved testing laboratory at the Contractor's expense. Provide laboratory welding inspection results to Contracting

Officer.

1.4.2 Welder Qualification

Submit certified welder qualification by tests in accordance with AWS D1.1/D1.1M, or under an equivalent approved qualification test. In addition, perform tests on test pieces in positions and with clearances equivalent to those actually encountered. If a test weld fails to meet requirements, conduct an immediate retest of two test welds and ensure that each test weld passes. Failure in the immediate retest will require that the welder be retested after further practice or training and make a complete set of test welds.

1.5 QUALITY ASSURANCE

1.5.1 Fabrication Drawing Requirements

Submit fabrication drawings for approval prior to fabrication. Prepare in accordance with AISC 325, AISC 326, ASCE 7-22, and State of OH Building Code. Fabrication drawings will not be reproductions of contract drawings. Include complete information for the fabrication and erection of the structure's components, including the location, type, and size of bolts, welds, member sizes and lengths, connection details, blocks, copes, and cuts. Use AWS A2.4 standard welding symbols. Clearly highlight any deviations from the details shown on the contract drawings highlighted on the fabrication drawings. Explain the reasons for any deviations from the contract drawings.

PART 2 PRODUCTS

2.1 FABRICATION

Preassemble items in the shop to the greatest extent possible. Disassemble units only to the extent necessary for shipping and handling. Clearly mark units for reassembly and coordinated installation.

For the fabrication of work exposed to view, use only materials that are smooth and free of surface blemishes, including pitting, seam marks, roller marks, rolled trade names, and roughness. Remove blemishes by grinding, or by welding and grinding, before cleaning, treating, and applying surface finishes, including zinc coatings.

Provide railing and handrail detail plans and elevations at not less than 1 inch to 1 foot. Provide details of sections and connections at not less than 3 inches to 1 foot. Also detail setting drawings, diagrams, templates for installation of anchorages, including concrete inserts, anchor bolts, and miscellaneous metal items having integral anchors.

Use materials of size and thicknesses indicated or, if not indicated, of the size and thickness necessary to produce adequate strength and durability in the finished product for its intended use. Work the materials to the dimensions indicated on approved detail drawings, using proven details of fabrication and support. Use the type of materials indicated or specified for the various components of work.

Form exposed work true to line and level, with accurate angles and surfaces and straight sharp edges. Ensure that all exposed edges are eased to a radius of approximately 1/32 inch. Bend metal corners to the

smallest radius possible without causing grain separation or otherwise impairing the work.

Weld corners and seams continuously and in accordance with the recommendations of AWS D1.1/D1.1M. Grind exposed welds smooth and flush to match and blend with adjoining surfaces.

Form the exposed connections with hairline joints that are flush and smooth, using concealed fasteners wherever possible. Use exposed fasteners of the type indicated or, if not indicated, use countersunk Phillips flathead screws or bolts.

Provide anchorage of the type indicated and coordinated with the supporting structure. Fabricate anchoring devices and space as indicated and as required to provide adequate support for the intended use of the work.

Use hot-rolled steel bars for work fabricated from bar stock unless work is indicated or specified to be fabricated from cold-finished or cold-rolled stock.

2.1.1 Aluminum Railings

Fabrication: Provide fabrication jointing by one of the following methods:

a. Use flush-type rail fittings, welded and ground smooth with splice locks secured with 3/8 inch recessed-head set screws.

b. Ensure that mitered and welded joints made by fitting; post to top rail; intermediate rail to post; and corners, are groove welded and ground smooth. Where allowed by the Contracting Officer, provide butt splices reinforced by a tight-fitting dowel or sleeve not less than 6 inches in length. Tack-weld or epoxy-cement the dowel or sleeve to one side of the splice.

c. Assemble railings using slip-on aluminum-magnesium alloy fittings for joints. Fasten fittings to pipe or tube with 1/4 or 3/8 inch stainless-steel recessed-head setscrews. Provide assembled railings with fittings only at vertical supports or at rail terminations attached to walls. Provide expansion joints at the midpoint of panels. Provide a setscrew in only one side of the slip-on sleeve. Provide alloy fittings to conform to ASTM B26/B26M.

2.1.2 Steel Handrails

Fabricate joint posts, rail, and corners by one of the following methods:

a. Flush-type rail fittings of commercial standard, welded and ground smooth, with railing splice locks secured with 3/8 inch hexagonal-recessed-head setscrews.

b. Mitered and welded joints made by fitting post to top rail and intermediate rail to post, mitering corners, groove-welding joints, and grinding smooth. Butt railing splices and reinforce them by a tight-fitting interior sleeve not less than 6 inches long.

c. Railings may be bent at corners in lieu of jointing, provided that bends are made in suitable jigs and the pipe is not crushed.

2.1.3 Protective Coating

Shop-prime the steelwork as indicated in accordance with Section 09 90 00 PAINTS AND COATINGS except the following:

a. Steel surfaces encased in concrete

b. Steel surfaces for welding

c. High-strength bolt-connected contact surfaces

d. Crane rail surfaces

2.2 COMPONENTS

2.3 Mill Test Reports

Provide mill test reports for . Mill test report will include but is not limited to material heat number, material grade, edition year and type of specification met, material dimension, mechanical properties, chemical analysis, heat treatment (if applicable), and certified inspector signature.

PART 3 EXECUTION

3.1 PREPARATION

Adjust stair railings and handrails before securing in place in order to ensure proper matching at butting joints and correct alignment throughout their length. Space posts not more than 8 feet on center. Plumb posts in each direction. Secure posts and rail ends to building construction as follows:

a. Anchor posts in concrete by means of pipe sleeves set and anchored into concrete. Provide sleeves of galvanized, standard-weight, steel pipe, not less than 6 inches long, and having an inside diameter not less than 1/2 inch greater than the outside diameter of the inserted pipe post. Provide steel plate closure secured to the bottom of the sleeve, with closure width and length not less than 1 inch greater than the outside diameter of the sleeve. After posts have been inserted into sleeves, fill the annular space between the post and sleeve with nonshrink grout or a quick-setting hydraulic cement. Cover anchorage joint with a round steel flange welded to the post.

Secure handrails to walls by means of wall brackets and wall return fitting at handrail ends. Provide brackets of malleable iron castings, with not less than 3 inch projection from the finished wall surface to the center of the pipe, drilled to receive one 3/8 inch bolt. Locate brackets not more than 60 inches on center. Provide wall return fittings of cast iron castings, flush type, with the same projection as that specified for wall brackets. Secure wall brackets and wall return fittings to building construction as follows:

a. For concrete and solid masonry anchorage, use bolt anchor expansion shields and lag bolts.

b. For hollow masonry and stud partition anchorage, use toggle bolts having square heads.

Install toe boards and brackets where indicated. Make splices, where required, at expansion joints. Install removable sections as indicated.

3.2 INSTALLATION

Submit manufacturer's installation instructions for the following products to be used in the fabrication of steel stair railing and hand rail work:

a. Protective coating

b. Masonry anchorage devices

c. Steel railings and handrails

d. Anchorage and fastening systems

Provide complete, detailed fabrication and installation drawings for all iron and steel hardware, and for all steel shapes, plates, bars, and strips used in accordance with the design specifications cited in this section.

3.2.1 Steel Handrail

Install handrail by means of masonry with expansion shields and bolts or toggle bolts. Secure rail ends by steel pipe flanges anchored by expansion shields and bolts.

3.2.2 Touchup Painting

Immediately after installation, clean field welds, bolted connections, abraded areas of the shop paint, and exposed areas painted with the paint used for shop painting. Apply paint by brush or spray to provide a minimum dry-film thickness of 2 mils.

3.3 FIELD QUALITY CONTROL

3.3.1 Field Welding

Ensure that procedures of manual shielded metal arc welding, appearance and quality of welds made, and methods used in correcting welding work comply with AWS D1.1/D1.1M.

-- End of Section --

SECTION 06 10 00

ROUGH CARPENTRY
08/16, CHG 2: 11/18

PART 1 GENERAL

1.1 REFERENCES

The publications listed below form a part of this specification to the extent referenced. The publications are referred to within the text by the basic designation only.

AMERICAN INSTITUTE OF TIMBER CONSTRUCTION (AITC)

AITC TCM	(2012) Timber Construction Manual, 5th Edition

AMERICAN LUMBER STANDARDS COMMITTEE (ALSC)

ALSC PS 20	(2021) American Softwood Lumber Standard

AMERICAN RAILWAY ENGINEERING AND MAINTENANCE-OF-WAY ASSOCIATION (AREMA)

AREMA Eng Man	(2023) Manual for Railway Engineering

AMERICAN SOCIETY OF MECHANICAL ENGINEERS (ASME)

ASME B18.2.1	(2012; R 2021) Square, Hex, Heavy Hex, and Askew Head Bolts and Hex, Heavy Hex, Hex Flange, Lobed Head, and Lag Screws (Inch Series)
ASME B18.2.2	(2022) Nuts for General Applications: Machine Screw Nuts, and Hex, Square, Hex Flange, and Coupling Nuts (Inch Series)
ASME B18.5.2.1M	(2006; R 2011) Metric Round Head Short Square Neck Bolts
ASME B18.5.2.2M	(1982; R 2010) Metric Round Head Square Neck Bolts
ASME B18.6.1	(2016) Wood Screws (Inch Series)

AMERICAN WOOD COUNCIL (AWC)

AWC NDS	(2018) National Design Specification (NDS) for Wood Construction
AWC WFCM	(2012) Wood Frame Construction Manual for One- and Two-Family Dwellings

AMERICAN WOOD PROTECTION ASSOCIATION (AWPA)

AWPA BOOK	(2015) AWPA Book of Standards

AWPA M2	(2019) Standard for the Inspection of Preservative Treated Wood Products for Industrial Use
AWPA M6	(2024) Brands Used on Preservative Treated Materials
AWPA P5	(2015) Standard for Waterborne Preservatives
AWPA P18	(2014) Nonpressure Preservatives
AWPA P49	(2015; R 2021) Standard for Fire Retardant FR-1
AWPA T1	(2024) Use Category System: Processing and Treatment Standard
AWPA U1	(2024) Use Category System: User Specification for Treated Wood

APA - THE ENGINEERED WOOD ASSOCIATION (APA)

APA E445	(2002) Performance Standards and Qualification Policy for Structural-Use Panels (APA PRP-108)
APA EWS T300	(2007) Technical Note: Glulam Connection Details
APA F405	(19) Product Guide: Performance Rated Panels
APA L870	(2010) Voluntary Product Standard, PS 1-09, Structural Plywood
APA S350	(2019) PS 2-18, Performance Standard for Wood-Based Structural-Use Panels

ASTM INTERNATIONAL (ASTM)

ASTM A153/A153M	(2023) Standard Specification for Zinc Coating (Hot-Dip) on Iron and Steel Hardware
ASTM A307	(2021) Standard Specification for Carbon Steel Bolts, Studs, and Threaded Rod 60 000 PSI Tensile Strength
ASTM A653/A653M	(2023) Standard Specification for Steel Sheet, Zinc-Coated (Galvanized) or Zinc-Iron Alloy-Coated (Galvannealed) by the Hot-Dip Process
ASTM C1136	(2023) Standard Specification for Flexible, Low Permeance Vapor Retarders for Thermal Insulation
ASTM C1396/C1396M	(2017) Standard Specification for Gypsum

Board

ASTM D2898 (2010; R 2017) Standard Practice for Accelerated Weathering of Fire-Retardant-Treated Wood for Fire Testing

ASTM E96/E96M (2024) Standard Test Methods for Gravimetric Determination of Water Vapor Transmission Rate of Materials

ASTM F547 (2017) Standard Terminology of Nails for Use with Wood and Wood-Base Materials

ASTM F1667/F1667M (2021a) Standard Specification for Driven Fasteners: Nails, Spikes, and Staples

COMPOSITE PANEL ASSOCIATION (CPA)

ANSI/CPA A135.4 (2012; R2020) Basic Hardboard

GREEN SEAL (GS)

GS-36 (2013) Adhesives for Commercial Use

INTERNATIONAL CODE COUNCIL (ICC)

ICC IBC (2024) International Building Code

NATIONAL HARDWOOD LUMBER ASSOCIATION (NHLA)

NHLA Rules (2023) Rules for the Measurement & Inspection of Hardwood & Cypress

NORTHEASTERN LUMBER MANUFACTURERS ASSOCIATION (NELMA)

NELMA Grading Rules (2021) Standard Grading Rules for Northeastern Lumber

REDWOOD INSPECTION SERVICE (RIS) OF THE WESTERN WOOD PRODUCTS ASSOCIATION (WWPA)

RIS Grade Use (2019) California Redwood Lumber Grades and Uses

SOUTH COAST AIR QUALITY MANAGEMENT DISTRICT (SCAQMD)

SCAQMD Rule 1168 (2022) Adhesive and Sealant Applications

SOUTHERN CYPRESS MANUFACTURERS ASSOCIATION (SCMA)

SCMA Spec (1986; Supple. No. 1, Aug 1993) Standard Specifications for Grades of Southern Cypress

SOUTHERN PINE INSPECTION BUREAU (SPIB)

SPIB 1003 (2021) Standard Grading Rules for Southern Pine Lumber

TRUSS PLATE INSTITUTE (TPI)

TPI 1	(2022) National Design Standard for Metal Plate Connected Wood Truss Construction

U.S. DEPARTMENT OF COMMERCE (DOC)

DOC/NIST PS58	(1973) Basic Hardboard (ANSI A135.4)

U.S. GENERAL SERVICES ADMINISTRATION (GSA)

CID A-A-1923	(Rev A; Notice 1; Notice 2; Notice 3; Notice 4) Shield, Expansion (Lag, Machine and Externally Threaded Wedge Bolt Anchors)
CID A-A-1924	(Rev A; Notice 3) Shield, Expansion (Self Drilling Tubular Expansion Shell Bolt Anchors
CID A-A-1925	(Rev A; Notice 1; Notice 2; Notice 3; Notice 4) Shield Expansion (Nail Anchors)
FS UU-B-790	(Rev A; Notice 2) Building Paper Vegetable Fiber: (Kraft, Waterproofed, Water Repellent and Fire Resistant)

UL SOLUTIONS (UL)

UL 2818	(2022) GREENGUARD Certification Program For Chemical Emissions For Building Materials, Finishes And Furnishings

WEST COAST LUMBER INSPECTION BUREAU (WCLIB)

WCLIB 17	(2015; R 2018) Standard Grading Rules for West Coast Lumber

WESTERN WOOD PRODUCTS ASSOCIATION (WWPA)

WWPA G-5	(2021) Western Lumber Grading Rules

1.2 SUBMITTALS

Government approval is required for submittals with a "G" or "S" classification. Submittals not having a "G" or "S" classification are for Contractor Quality Control approval. Submittals not having a "G" or "S" classification are for information only. When used, a code following the "G" classification identifies the office that will review the submittal for the Government. Submit the following in accordance with Section 01 33 00 SUBMITTAL PROCEDURES:

SD-02 Shop Drawings

Modifications of Structural Members;

Drawings of structural laminated members, fabricated wood trusses, engineered wood joists and rafters, and other fabricated structural members indicating materials, shop fabrication, and

field erection details; including methods of fastening.

Nailers and Nailing Strips;

Drawings of field erection details, including materials and methods of fastening nailers in conformance with Factory Mutual wind uplift rated systems specified in other Sections of these specifications.

SD-03 Product Data

Plastic Lumber

Fiberboard Wall Sheathing

Cellulose Honeycomb Panels

Fire-retardant Treatment

Structural-use and OSB Panels

Oriented Strand Board

Adhesives

Recycled Content for Cellulose Honeycomb Panels; SSD-05 Design Data

Modifications of Structural Members;

Design analysis and calculations showing design criteria used to accomplish the applicable analysis.

SD-06 Test Reports

Preservative-treated Lumber and Plywood

SD-07 Certificates

Preservative Treatment

SD-10 Operation and Maintenance Data

Take-back Program

Include contact information, summary of procedures, and the limitations and conditions applicable to the project. Indicate manufacturer's commitment to reclaim materials for recycling or reuse.

1.3 DELIVERY AND STORAGE

Deliver materials to the site in an undamaged condition. Store, protect, handle, and install prefabricated structural elements in accordance with manufacturer's instructions and as specified. Store materials off the ground to provide proper ventilation, with drainage to avoid standing water, and protection against ground moisture and dampness. Store materials with a moisture barrier at both the ground level and as a cover forming a well ventilated enclosure. Store wood I-beams and glue-laminated beams and joists on edge. Adhere to requirements for

stacking, lifting, bracing, cutting, notching, and special fastening requirements. Do not use materials that have visible moisture or biological growth. Remove defective and damaged materials and provide new materials. Store separated reusable wood waste convenient to cutting station and area of work.

1.4 GRADING AND MARKING

1.4.1 Lumber

Mark each piece of framing and board lumber or each bundle of small pieces of lumber with the grade mark of a recognized association or independent inspection agency. Such association or agency must be certified by the Board of Review, American Lumber Standards Committee, to grade the species used. Surfaces that are to be exposed to view must not bear grademarks, stamps, or any type of identifying mark. Hammer marking will be permitted on timbers when all surfaces will be exposed to view.

1.4.2 Plywood

Mark each sheet with the mark of a recognized association or independent inspection agency that maintains continuing control over the quality of the plywood. The mark must identify the plywood by species group or span rating, exposure durability classification, grade, and compliance with APA L870. Surfaces that are to be exposed to view must not bear grademarks or other types of identifying marks.

1.4.3 Preservative-Treated Lumber and Plywood

The Contractor is responsible for the quality of treated wood products. Each treated piece must be inspected in accordance with AWPA M2 and permanently marked or branded, by the producer, in accordance with AWPA M6. The Contractor must provide Contracting Officer's Representative (COR) with the inspection report of an approved independent inspection agency that offered products comply with applicable AWPA Standards. The appropriate Quality Mark on each piece will be accepted, in lieu of inspection reports, as evidence of compliance with applicable AWPA treatment standards.

1.4.4 Hardboard, Gypsum Board, and Fiberboard

Mark each sheet or bundle to identify the standard under which the material is produced and the producer.

1.5 SIZES AND SURFACING

ALSC PS 20 for dressed sizes of yard and structural lumber. Lumber must be surfaced four sides. Size references, unless otherwise specified, are nominal sizes, and actual sizes must be within manufacturing tolerances allowed by the standard under which the product is produced. Other measurements are IP or SI standard.

1.6 MOISTURE CONTENT

Air-dry or kiln-dry lumber. Kiln-dry treated lumber after treatment. Maximum moisture content of wood products must be as follows at the time of delivery to the job site:

a. Framing lumber and board, 19 percent maximum

b. Timbers 5 inches and thicker, 25 percent maximum

d. Materials other than lumber; moisture content must be in accordance with standard under which the product is produced

1.7 PRESERVATIVE TREATMENT

Treat wood products with waterborne wood preservatives conforming to AWPA P5. Pressure treatment of wood products must conform to the requirements of AWPA BOOK Use Category System Standards U1 and T1. Pressure-treated wood products must not contain arsenic, chromium, or other agents classified as carcinogenic, probably carcinogenic, or possibly carcinogenic to humans (compounds in Groups 1, 2A, or 2B) by the International Agency for Research on Cancer (IARC), Lyon, France. Pressure-treated wood products must not exceed the limits of the U.S. EPA's Toxic Characteristic Leaching Procedure (TCLP), and must not be classified as hazardous waste. Submit certification from treating plant stating chemicals and process used and net amount of preservatives retained are in conformance with specified standards. In accordance with AWPA U1 provide non-copper preservative treatment such as EL2, PTI or SBX,DOT for products in direct contact with sheet metal.

a. 0.25 pcf intended for above ground use.

b. 0.40 pcf intended for ground contact and fresh water use. 0.60 pcf intended for Ammoniacal Copper Quaternary Compound (ACQ)-treated foundations. 0.80 to 1.00 pcf intended for ACQ-treated pilings. All wood must be air or kiln dried after treatment. Specific treatments must be verified by the report of an approved independent inspection agency, or the AWPA Quality Mark on each piece. Do not incise surfaces of lumber that will be exposed. Minimize cutting and avoid breathing sawdust. Brush coat areas that are cut or drilled after treatment with either the same preservative used in the treatment or with a 2 percent copper naphthenate solution. Plastic lumber must not be preservative treated. The following items must be preservative treated:

(1) Wood framing, woodwork, and plywood up to and including the subflooring at the first-floor level of structures having crawl spaces when the bottoms of such items are 24 inches or less from the earth underneath.

(2) Wood members that are in contact with water.

(3) Exterior wood steps, platforms, and railings; and all wood framing of open, roofed structures.

(4) Wood sills, soles, plates, furring, and sleepers that are less than 24 inches from the ground, furring and nailers that are set into or in contact with concrete or masonry.

(5) Nailers, edge strips, crickets, curbs, and cants for roof decks.

1.7.1 Existing Structures

Use borate, permathrin, or a sodium silicate wood mineralization process to treat wood. Use borate for interior applications only.

1.7.2 New Construction

Use a boron-based preservative conforming to AWPA P18, sodium silicate wood mineralization process, or Ammoniacal Copper Quaternary Compound to treat wood. Use boron-based preservatives for above-ground applications only.

1.8 FIRE-RETARDANT TREATMENT

Fire-retardant treated wood must be pressure treated with fire retardants conforming to AWPA P49. Fire retardant treatment of wood products must conform to the requirements of AWPA U1, Commodity Specification H and AWPA T1, Section H. Treatment and performance inspection must be by an independent and qualified testing agency that establishes performance ratings. Each piece or bundle of treated material must bear identification of the testing agency to indicate performance in accordance with such rating. Treated materials to be exposed to rain wetting must be subjected to an accelerated weathering technique in accordance with ASTM D2898 prior to being tested. Such items which will not be inside a building, and such items which will be exposed to heat or high humidity, must receive exterior fire-retardant treatment. Items to be treated include the following:

a. .

1.9 QUALITY ASSURANCE

1.9.1 Drawing Requirements

For fabricated structural members, trusses, qlu-lam members, indicate materials, details of construction, methods of fastening, and erection details. Include reference to design criteria used and manufacturers design calculations. Submit drawings for all proposed modifications of structural members. Do not proceed with modifications until the submittal has been approved.

1.9.2 Data Required

Submit calculations and drawings for all proposed modifications of structural members. Do not proceed with modifications until the submittal has been approved.

1.9.3 Humidity Requirements

Sequence work to minimize use of temporary HVAC to dry out building and control humidity.

1.10 ENVIRONMENTAL REQUIREMENTS

During and immediately after installation of treated wood, engineered wood products, and laminated wood products at interior spaces, provide temporary ventilation.

1.11 CERTIFICATIONS

1.11.1 Certified Wood Grades

Provide certificates of grade from the grading agency on graded but unmarked lumber or plywood attesting that materials meet the grade

requirements specified herein.

1.11.2 Indoor Air Quality Certifications

Submit required indoor air quality certifications in one submittal package.

1.11.2.1 Adhesives and Sealants

Provide products certified to meet indoor air quality requirements by UL 2818 (Greenguard) Gold, SCS Global Services Indoor Advantage Gold or provide certification or validation by other third-party programs that products meet the requirements of this Section. Provide current product certification documentation from certification body. When product does not have certification, provide validation that product meets the indoor air quality product requirements cited herein.

PART 2 PRODUCTS

2.1 MATERIALS

2.1.1 Virgin Lumber

Lumber fabricated from old growth timber is not permitted. Avoid companies who buy, sell, or use old growth timber in their operations, when possible.

2.1.2 Natural Decay- and Insect-Resistant Wood

An occasional piece with corner sapwood is permitted if 90 percent or more of the width of each side on which the sapwood occurs is heartwood.

2.2 LUMBER

2.2.1 Framing Lumber

Framing lumber such as studs, plates, caps, collar beams, cant strips, bucks, sleepers, nailing strips, and nailers and board lumber such as subflooring and wall and roof sheathing must be one of the species listed in the table below. Minimum grade of species must be as listed.

Table of Grades for Framing and Board Lumber			
Grading Rules	Species	Framing	Board Lumber
WWPA G-5 standard grading rules	Aspen, Douglas Fir-Larch, Douglas Fir South, Engelmann Spruce-Lodgepole Pine, Engelmann Spruce, Hem-Fir, Idaho White Pine, Lodgepole Pine, Mountain Hemlock, Mountain Hemlock-Hem-Fir, Ponderosa Pine-Sugar Pine, Ponderosa Pine-Lodgepole Pine, Subalpine Fir, White Woods, Western Woods, Western Cedars, Western Hemlock	All Species: Standard Light Framing or No. 3 Structural Light Framing (Stud Grade for 2x4 nominal size, 10 feet and shorter)	All Species: No. 3 Common
WCLIB 17 standard grading rules	Douglas Fir-Larch, Hem-Fir, Mountain Hemlock, Sitka Spruce, Western Cedars, Western Hemlock	All Species: Standard Light Framing or No. 3 Structural Light Framing (Stud Grade for 2x4 nominal size, 10 feet and shorter)	All Species: Standard

Table of Grades for Framing and Board Lumber			
Grading Rules	Species	Framing	Board Lumber
SPIB 1003 standard grading rules	Southern Pine	All Species: Standard Light Framing or No. 3 Structural Light Framing (Stud Grade for 2x4 nominal size, 10 feet and shorter)	No. 2 Boards
SCMA Spec standard specifications	Cypress	No. 2 Common	No. 2 Common
NELMA Grading Rules standard grading rules	Balsam Fir, Eastern Hemlock-Tamarack, Eastern Spruce, Eastern White Pine, Northern Pine, Northern Pine-Cedar	All Species: Standard Light Framing or No. 3 Structural Light Framing (Stud Grade for 2x4 nominal size, 10 feet and shorter)	All Species: No. 3 Common except Standard for Eastern White and Northern Pine
RIS Grade Use standard specifications	Redwood	All Species: Standard Light Framing or No. 3 Structural Light Framing (Stud Grade for 2x4 nominal size, 10 feet and shorter)	Construction Heart

Table of Grades for Framing and Board Lumber			
Grading Rules	Species	Framing	Board Lumber
NHLA Rules rules for the measurement and inspection of hardwood and cypress lumber	Cypress	No. 2 Dimension	No. 2 Common

2.3 PLYWOOD, STRUCTURAL-USE, AND ORIENTED STRAND BOARD (OSB) PANELS

APA L870, APA S350, APA E445, and APA F405 respectively.

2.3.1 Subflooring

2.3.1.1 Plywood

C-D Grade, Exposure 1 durability classification, Span rating of 48/24 or greater.

2.3.2 Combination Subfloor-Underlayment

2.3.2.1 Plywood

Underlayment Grade, Exposure 1, or Exterior Type,C-C (Plugged) Grade. Minimum thickness must be as listed below except where indicated to have greater thickness.

Support Spacing	Underlayment Minimum Thickness
16 inches	1/2 inch for Group 1 species
	19/32 inch for Group 2 and 3 species
	23/32 inch for Group 4 species
24 inches	23/32 inch for Group 1 species
	7/8 inch for Group 2 and 3 species
	1 inch for Group 4 species

2.3.2.2 Structural-Use Panel

Combination subfloor-underlayment grade with durability equivalent to Exterior plywood, Span Rating of 24 or greater.

2.3.3 Wall Sheathing

2.3.3.1 Plywood

C-D Grade, Exposure 1, and a minimum thickness of 1/2 inch, except where indicated to have greater thickness.

2.3.4 Diaphragms

2.3.4.1 Plywood

, C-D grade, Exposure 1, and a minimum thickness of 1/2 inch.

2.3.5 Other Uses

2.3.5.1 Plywood

Plywood for . C-D Grade, Exposure 1.

2.4 UNDERLAYMENT

Underlayment must conform to one of the following:

2.4.1 Hardboard

ANSI/CPA A135.4 service class, sanded one side, 1/4 inch thick, 4 feet wide.

2.4.2 Plywood

Plywood must conform to APA L870, underlayment grade with exterior glue, or C-C (Plugged) exterior grade 11/32 inch thick, 4 feet wide.

2.4.3 Fiberboard

Use

2.4.4 Strawboard Panels

Minimum 70 percent agricultural waste straw with no added formaldehyde binders. Submit data identifying percentage of biobased content for strawboard panels. Products must contain no added urea-formaldehyde resins. For products located on the interior of the building (inside of the weatherproofing system), provide certification of indoor air quality for strawboard panels.

2.5 OTHER MATERIALS

2.5.1 Hardboard Underlayment

DOC/NIST PS58, service class, sanded on one side, 1/4 inch thick 4 feet wide.

2.5.2 Gypsum Wall Sheathing

ASTM C1396/C1396M, fire retardant (Type X) 5/8 inch thick; 4 feet wide with square edge for supports 16 inches o.c. with or without corner bracing of framing; 2 feet wide with V-tongue and groove (T&G) edge for supports 16 inches o.c. with corner bracing of framing.

2.5.3 Building Paper

FS UU-B-790, Type I, Grade D, Style 1.

2.5.4 Miscellaneous Wood Members

2.5.4.1 Nonstress Graded Members

Members must include bridging, corner bracing, furring, grounds, and nailing strips. Members must be in accordance with TABLE I for the species used. Sizes must be as follows unless otherwise shown:

Member	Size inch
Bridging	1 x 3 or 1 x 4 for use between members 2 x 12 and smaller; 2 x 4 for use between members larger than 2 x 12.
Corner bracing	1 x 4.
Furring	1 x 2
Grounds	Plaster thickness by 38.
Nailing strips	1 x 3 or 1 x 4 when used as shingle base or interior finish, otherwise 2 inch stock.

2.5.4.2 Wood Bumpers

AREMA Eng Man, Industrial grade cross ties

2.5.4.3 Sill Plates

Sill plates must be standard or number 2 grade.

2.5.4.4 Blocking

Blocking must be standard or number 2 grade.

2.5.4.5 Rough Bucks and Frames

Rough bucks and frames must be straight standard or number 2 grade.

2.5.5 Adhesives

Comply with applicable regulations regarding toxic and hazardous materials and as specified. Provide non-aerosol adhesive products used on the interior of the building (defined as inside of the weatherproofing system) meeting either emissions requirements of CDPH SECTION 01350 (limit requirements for either office or classroom spaces regardless of space type) or VOC content requirements of SCAQMD Rule 1168. Provide aerosol

adhesives used on the interior of the building meeting either emissions requirements of CDPH SECTION 01350 (limit requirements for either office or classroom spaces regardless of space type) or VOC content requirements of GS-36. Provide certification or validation of indoor air quality for non-aerosol adhesives applied on the interior of the building (inside of the weatherproofing system). Provide certification or validation of indoor air quality for aerosol adhesives used on the interior of the building (inside of the weatherproofing system).

2.6 ROUGH HARDWARE

Unless otherwise indicated or specified, rough hardware must be of the type and size necessary for the project requirements. Sizes, types, and spacing of fastenings of manufactured building materials must be as recommended by the product manufacturer unless otherwise indicated or specified. Rough hardware exposed to the weather or embedded in or in contact with preservative treated wood, exterior masonry, or concrete walls or slabs must be hot-dip zinc-coated in accordance with ASTM A153/A153M. Nails and fastenings for fire-retardant treated lumber and woodwork exposed to the weather must be copper alloy or hot-dipped galvanized fasteners as recommended by the treated wood manufacturer.

2.6.1 Bolts, Nuts, Studs, and Rivets

ASME B18.2.1, ASME B18.5.2.1M, ASME B18.5.2.2M and ASME B18.2.2.

2.6.2 Anchor Bolts

ASTM A307, size as indicated, complete with nuts and washers.

2.6.3 Expansion Shields

CID A-A-1923, CID A-A-1924, and CID A-A-1925. Except as shown otherwise, maximum size of devices must be 3/8 inch.

2.6.4 Lag Screws and Lag Bolts

ASME B18.2.1.

2.6.5 Wood Screws

ASME B18.6.1.

2.6.6 Nails and Staples

ASTM F547, size and type best suited for purpose; staples must be as recommended by the manufacturer of the materials to be joined. For sheathing and subflooring, length of nails must be sufficient to extend 1 inch into supports. In general, 8-penny or larger nails must be used for nailing through 1 inch thick lumber and for toe nailing 2 inch thick lumber; 16-penny or larger nails must be used for nailing through 2 inch thick lumber. Nails used with treated lumber and sheathing must be hot-dipped galvanized in accordance with ASTM A153/A153M. Nailing must be in accordance with the recommended nailing schedule contained in AWC WFCM. Where detailed nailing requirements are not specified, nail size and spacing must be sufficient to develop an adequate strength for the connection. The connection's strength must be verified against the nail capacity tables in AWC NDS. Reasonable judgment backed by experience must ensure that the designed connection will not cause the wood to split. If

a load situation exceeds a reasonable limit for nails, a specialized connector must be used.

2.6.7 Wire Nails

ASTM F1667/F1667M.

2.6.8 Timber Connectors

Unless otherwise specified, timber connectors must be in accordance with TPI 1, APA EWS T300 or AITC TCM.

2.6.9 Clip Angles

Steel, 3/16 inch thick, size best suited for intended use; or zinc-coated steel or iron commercial clips designed for connecting wood members.

2.6.10 Joist Hangers

Steel or iron, zinc coated, sized to fit the supported member, of sufficient strength to develop the full strength of the supported member in accordance with ICC IBC, and furnished complete with any special nails required.

2.6.11 Tie Straps

For joists supported by the lower flange of steel beams, provide 1/8 by 1-1/2 inch steel strap, 2 feet long , except as indicated otherwise.

2.6.12 Door Buck Anchors

Metal anchors, 1/8 by 1-1/4 inch steel, 12 inches long, with ends bent 2 inches , except as indicated otherwise. Anchors must be screwed to the backs of bucks and built into masonry or concrete. Locate 8 inches above sills and below heads and not more than 24 inches intermediately between. Anchorage of bucks to steel framing must be as necessary to suit the conditions.

2.6.13 Metal Bridging

Where not indicated or specified otherwise, No. 16 U.S. Standard gage, cadmium-plated or zinc-coated.

2.6.14 Toothed Rings and Shear Plates

AWC NDS.

2.6.15 Beam Anchors

Steel U-shaped strap anchors 1/4 inch thick by 1-1/2 inches wide , except as indicated otherwise.

2.6.16 Metal Framing Anchors

Construct anchors to the configuration shown using hot dip zinc-coated steel conforming to ASTM A653/A653M, G90. Except where otherwise shown, Steel must be not lighter than 18 gage. Special nails supplied by the manufacturer must be used for all nailing.

2.6.17 Panel Edge Clips

Extruded aluminum or galvanized steel, H-shaped clips to prevent differential deflection of roof sheathing.

2.7 AIR INFILTRATION BARRIER

Air infiltration barrier must be building paper meeting the requirements of ASTM C1136, Type IV, style optional or a tear and puncture resistant olefin building wrap (polyethylene or polypropylene) with a moisture vapor transmission rate of 125 g per square meter per 24 hours in accordance with ASTM E96/E96M, Desiccant Method at 23 degrees C or with a moisture vapor transmission rate of 670 g per square meter per 24 hours in accordance with ASTM E96/E96M, Water Method at 23 degrees C.

PART 3 EXECUTION

3.1 INSTALLATION

Do not install building construction materials that show visual evidence of biological growth.

Conform to AWC WFCM unless otherwise indicated or specified. Select lumber sizes to minimize waste. Fit framing lumber and other rough carpentry, set accurately to the required lines and levels, and secure in place in a rigid manner. Do not splice framing members between bearing points. Set joists, rafters, and purlins with their crown edge up. Frame members for the passage of pipes, conduits, and ducts. Do not cut or bore structural members for the passage of ducts or pipes without approval. Reinforce all members damaged by such cutting or boring by means of specially formed and approved sheet metal or bar steel shapes, or remove and provide new, as approved. Provide as necessary for the proper completion of the work all framing members not indicated or specified. Spiking and nailing not indicated or specified otherwise must be in accordance with the Nailing Schedule contained in ICC IBC; perform bolting in an approved manner. Spikes, nails, and bolts must be drawn up tight. Timber connections and fastenings must conform to AWC NDS. Use slate or steel shims when leveling joists, beams, and girders on masonry or concrete. Do not use shimming on wood or metal bearings. When joists, beams, and girders are placed on masonry or concrete, a wood base plate must be positioned and leveled with grout. The joist, beam, or girder must then be placed on the plate. When joists, beams, and girders are set into masonry or concrete, a pocket must be formed into the wall. The joist, beam, or girder must then be placed into the pocket and leveled with a steel shim.

3.1.1 Sills

Set sills level and square and wedge with steel or slate shims; point or grout with non-shrinking cement mortar to provide continuous and solid bearing. Anchor sills to the foundations as indicated. Where sizes and spacing of anchor bolts are not indicated, provide not less than 5/8 inch diameter bolts at all corners and splices and space at a maximum of 6 feet o.c. between corner bolts. Provide at least two bolts for each sill member. Lap and splice sills at corners and bolt through the laps or butt the ends and through-bolt not more than 6 inches from the ends. Provide bolts with plate washers and nuts. Bolts in exterior walls must be zinc-coated.

3.1.1.1 Anchors in Masonry

Except where indicated otherwise, Embed anchor bolts not less than 15 inches in masonry unit walls and provide each with a nut and a 2 inch diameter washer at bottom end. Fully grout bolts with mortar.

3.1.1.2 Anchors in Concrete

Except where indicated otherwise, Embed anchor bolts not less than 8 inches in poured concrete walls and provide each with a nut and a 2 inch diameter washer at bottom end. A bent end may be substituted for the nut and washer; bend must be not less than 90 degrees. Powder-actuated fasteners spaced 3 feet o.c. may be provided in lieu of bolts for single thickness plates on concrete.

3.1.2 Bridging

Provide bridging for floor and ceiling joists and for roof rafters having slopes of less than 1/3. Locate bridging as indicated and as specified herein. Provide bridging for spans greater than 6 feet, but do not exceed 8 feet maximum spacing between rows of bridging. Install rows of bridging uniformly. Provide metal or wood cross-bridging, except where solid bridging is indicated. Do not nail the bottom end of cross-bridging until the subfloor has been laid.

3.1.2.1 Wood Cross-Bridging

Provide wood cross-bridging not less than 2 by 4 nominal size. Nail wood cross-bridging at each end with two 8-penny nails for one by thick material

3.1.2.2 Metal Cross-Bridging

Must be the manufacturer's standard product, not less than 16 gage before forming and coating. Metal bridging must be the compression type, lodged into or nailed to the wide faces of opposite joists at points diagonally across from each other near the bottoms and tops of joists.

3.1.3 Wall Framing

3.1.3.1 Studs

Select studs for straightness and set plumb, true, and in alignment. In walls and partitions more than 8 feet tall, provide horizontal bridging at not more than 8 feet o.c. using nominal 2 inch material of the same width as the studs; install the bridging flat. Sizes and spacing of studs must be as indicated. Double studs at jambs and heads of openings and triple at corners to form corner posts. Frame corner posts to receive sheathing, lath, and interior finish. Truss over openings exceeding 4 feet in width or use a header of sufficient depth. Toe-nail studs to sills or sole plates with four 8-penny nails or fasten with metal nailing clips or connectors. Anchor studs abutting concrete or masonry walls thereto near the top and bottom and at midheight of each story using expansion bolts or powder-actuated drive studs.

3.1.3.2 Plates

Use plates for walls and partitions of the same width as the studs to form continuous horizontal ties. Splice single plates; stagger the ends of

double plates. Double top plates in walls and bearing partitions, built up of two nominal 2 inch thick members. Top plates for nonbearing partitions must be single or double plates of the same size as the studs. Nail lower members of double top plates and single top plates to each stud and corner post with two 16-penny nails. Nail the upper members of double plates to the lower members with 10-penny nails, two near each end, and stagger 16 inches o.c. intermediately between. Nail sole plates on wood construction through the subfloor to each joist and header; stagger nails. Anchor sole plates on concrete with expansion bolts, one near each end and at not more than 6 feet o.c., or with powder-actuated fasteners, one near each end and at not more than 3 feet o.c. Provide plates cut for the passage of pipes or ducts with a steel angle as a tie for the plate and bearing for joist.

3.1.3.3 Diagonal Bracing

Provide diagonal bracing at all external corners and internal angles and at maximum 40 foot centers in stud walls, except that bracing may be omitted where diagonally applied wood sheathing, plywood or structural-use panel sheathing, 4 by 8 foot fiberboard sheathing, or gypsum board sheathing is used. Bracing must be of 1 by 6 material, let into the exterior face of studs. Extend bracing from top plates to sill at an angle of approximately 45 degrees and double nail at each stud. When openings occur near corners, provide diagonal knee braces extending from the corner post above headers to top plates and from below window sills to the main sill. Nail bracing at each bearing with two 8-penny nails.

3.1.4 Wall Sheathing

3.1.4.1 Plywood, Structural-Use, and OSB Panel Wall Sheathing

Apply horizontally or vertically. Extend sheathing over and nail to sill and top plate. Abut sheathing edges over centerlines of supports. Allow 1/8 inch spacing between panels and 1/8 inch at windows and doors. If sheathing is applied horizontally, stagger vertical end joints. Nail panels with 6-penny nails spaced 6 inches o.c. along edges of the panel and 12 inches o.c. over intermediate supports. Keep nails 3/8 inches away from panel ledges. Provide 2 by 4 blocking for horizontal edges not otherwise supported.

3.1.4.2 Gypsum Sheathing Board

Apply gypsum sheathing board either horizontally or vertically. Butt joints and locate over the centerlines of supports. Horizontally applied sheathing must be T&G, applied with tongued edge up. Stagger vertical joints and abut sheet closely to frames of openings. Nail sheathing with 11 gage, 3/8 inch head, zinc-coated nails 1-1/2 inches long for 1/2 inch sheathing and 1-3/4 inches long for 5/8 inch sheathing, spaced 3/8 inch minimum from edges. Provide 2 by 4 blocking for horizontal edges of 4 foot wide panels not otherwise supported.

a. Gypsum Sheathing Board Used with Diagonal-Braced Framing: Sheathing must be either 2 or 4 feet wide. Apply sheathing 2 feet wide horizontally. Nail 4 inches maximum o.c. at edges and over intermediate bearings. Apply sheathing 4 feet wide either horizontally or vertically. Nail 4 inches maximum o.c. at edges and 8 inches maximum o.c. at intermediate bearings.

b. Gypsum Sheathing Board Used with Unbraced Frames: Sheathing must be 4

feet wide and applied vertically. Extend sheathing over and nail to both sill and top plates. Nail 4 inches maximum o.c. at edges and 8 inches maximum o.c. at intermediate bearings.

3.1.4.3 Particleboard

Install according to manufacturer's instructions and accepted industry standards.

3.1.4.4 Cellulose Honeycomb Panels

Install according to manufacturer's instructions and accepted industry standards.

3.1.5 Wood Sheathing

Sheathing end joints must be made over framing members and so alternated that there will be at least two boards between joints on the same support. Each board must bear on at least three supports. Boards must be nailed at each support using two nails for boards 6 inches and less in width and three nails for boards more than 6 inches in width. Roof sheathing must not be installed where roof decking is installed.

3.1.6 Ceiling Joists

Size as indicated and set accurately and in alignment. Toe-nail joists to all plates with not less than three 10-penny nails. Frame openings in ceilings with headers and trimmers.

3.1.7 Metal Framing Anchors

Provide framing anchors at every rafter to fasten rafter to plates and studs against uplift movement and forces as indicated. Anchors must be punched and formed for nailing so that nails will be stressed in shear only. Nails must be zinc-coated; drive a nail in each nail hole provided in the anchor.

3.2 MISCELLANEOUS

3.2.1 Wood Roof Nailers, Edge Strips, Crickets, Curbs, and Cants

Provide sizes and configurations indicated or specified and anchored securely to continuous construction.

3.2.2 Wood Blocking

Provide proper sizes and shapes at proper locations for the installation and attachment of wood and other finish materials, fixtures, equipment, and items indicated or specified.

3.2.3 Wood Grounds

Provide for fastening wood trim, finish materials, and other items to plastered walls and ceilings. Install grounds in proper alignment and true with an 8 foot straightedge.

3.2.4 Wood Furring

Provide where shown and as necessary for facing materials specified.

Except as shown otherwise, furring strips must be nominal one by 3, continuous, and spaced 16 inches o.c. Erect furring vertically or horizontally as necessary. Nail furring strips to masonry. Do not use wood plugs. Provide furring strips around openings, behind bases, and at angles and corners. Furring must be plumb, rigid, and level and must be shimmed as necessary to provide a true, even plane with surfaces suitable to receive the finish required. Form furring for offsets and breaks in walls or ceilings on 1 by 4 wood strips spaced 16 inches o.c.

3.2.5 Temporary Closures

Provide with hinged doors and padlocks and install during construction at exterior doorways and other ground level openings that are not otherwise closed. Cover windows and other unprotected openings with polyethylene or other approved material, stretched on wood frames. Provide dustproof barrier partitions to isolate areas as directed.

3.2.6 Temporary Centering, Bracing, and Shoring

Provide for the support and protection of masonry work during construction as specified in Section 04 20 00. Forms and centering for cast-in-place concrete work are specified in Section 03 30 00 CAST-IN-PLACE CONCRETE.

3.2.7 Corner Bracing

Indatall corner bracing when required by type of sheathing used or when siding, other than panel siding, is applied directly to studs. Corner bracing must be let into the exterior surfaces of the studs at an angle of approximately 45 degrees, must extend completely over wall plates, and must be secured at each bearing with two nails.

3.3 ERECTION TOLERANCES

a. Framing members which will be covered by finishes such as wallboard, plaster, or ceramic tile set in a mortar setting bed, must be within the following limits:

(1) Layout of walls and partitions: 1/4 inch from intended position;

(2) Plates and runners: 1/4 inch in 8 feet from a straight line;

(3) Studs: 1/4 inch in 8 feet out of plumb, not cumulative; and

(4) Face of framing members: 1/4 inch in 8 feet from a true plane.

b. Framing members which will be covered by ceramic tile set in dry-set mortar, latex-portland cement mortar, or organic adhesive must be within the following limits:

(1) Layout of walls and partitions: 1/4 inch from intended position;

(2) Plates and runners: 1/8 inch in 8 feet from a straight line;

(3) Studs: 1/8 inch in 8 feet out of plumb, not cumulative; and

(4) Face of framing members: 1/8 in 8 feet from a true plane.

3.4 WASTE MANAGEMENT OF WOOD PRODUCTS

In accordance with the Waste Management Plan and as specified. Clearly separate damaged wood and other scrap lumber for acceptable alternative uses on site, including bracing, blocking, cripples, ties, and shims.

Separate treated, stained, painted, and contaminated wood and place in designated area for hazardous materials. Dispose of according to local regulations. Do not leave any wood, shavings, sawdust, or other wood waste buried in fill or on the ground. Prevent sawdust and wood shavings from entering the storm drainage system. Do not burn scrap lumber that has been pressure treated, or lumber that is less than one year old.

3.5 SCHEDULE

Some metric measurements in this section are based on mathematical conversion of inch-pound measurements. Typical conversion is as shown:

PRODUCTS	INCH-POUND Nominal	METRIC Conversion
Sawn lumber	2 by 4	38 by 89 mm
	1 by	19 mm by
Stud spacing	16 inches	400 mm
	If not 48 inches panel	406 mm
Plywood	48 by 96 inches	1200 mm by 2400 mm

-- End of Section --

SECTION 06 61 16

SOLID SURFACING FABRICATIONS
08/20

PART 1 GENERAL

1.1 REFERENCES

The publications listed below form a part of this specification to the extent referenced. The publications are referred to within the text by the basic designation only.

ASTM INTERNATIONAL (ASTM)

ASTM C920	(2018; R 2024) Standard Specification for Elastomeric Joint Sealants
ASTM D570	(2022) Standard Test Method for Water Absorption of Plastics
ASTM D638	(2014) Standard Test Method for Tensile Properties of Plastics
ASTM D696	(2016) Standard Test Method for Coefficient of Linear Thermal Expansion of Plastics Between -30 degrees C and 30 degrees C With a Vitreous Silica Dilatometer
ASTM D790	(2017) Standard Test Methods for Flexural Properties of Unreinforced and Reinforced Plastics and Electrical Insulating Materials
ASTM D2583	(2013a) Indentation Hardness of Rigid Plastics by Means of a Barcol Impressor
ASTM E84	(2024) Standard Test Method for Surface Burning Characteristics of Building Materials
ASTM G21	(2015; R 2021; E 2021) Standard Practice for Determining Resistance of Synthetic Polymeric Materials to Fungi

CALIFORNIA DEPARTMENT OF PUBLIC HEALTH (CDPH)

CDPH SECTION 01350	(2017; Version 1.2) Standard Method for the Testing and Evaluation of Volatile Organic Chemical Emissions from Indoor Sources using Environmental Chambers

INTERNATIONAL CAST POLYMER ASSOCIATION (ICPA)

ICPA SS-1	(2001) Performance Standard for Solid Surface Materials

NATIONAL ELECTRICAL MANUFACTURERS ASSOCIATION (NEMA)

ANSI/NEMA LD 3	(2005) Standard for High-Pressure Decorative Laminates

NSF INTERNATIONAL (NSF)

NSF/ANSI 51	(2023) Food Equipment Materials

1.2 SYSTEM DESCRIPTION

a. Work under this section includes countertops and other items utilizing solid surfacing material fabrications as indicated on the drawings and as described in this specification. Do not change source of supply for materials after work has started, if the appearance of finished work would be affected.

b. In most instances, installation of solid surfacing material fabricated components and assemblies requires strong correctly located structural support provided by other trades. To provide a stable, sound, secure installation, close coordination is required between the solid surfacing material fabricator/installer and other trades to ensure that necessary structural wall support, cabinet counter top structural support, proper clearances, and other supporting components are provided for the installation of wall panels, counter tops, shelving, and all other solid surfacing material fabrications to the degree and extent recommended by the solid surfacing material manufacturer.

c. Provide appropriate staging areas for solid surfacing material fabrications. Allow variation in component size and location of openings of plus or minus 1/8 inch.

1.3 SUBMITTALS

Government approval is required for submittals with a "G" or "S" classification. Submittals not having a "G" or "S" classification are for Contractor Quality Control approval. Submittals not having a "G" or "S" classification are for information only. When used, a code following the "G" classification identifies the office that will review the submittal for the Government. Submit the following in accordance with Section 01 33 00 SUBMITTAL PROCEDURES:

SD-02 Shop Drawings

Detail Fabrication Drawings;

Installation;

SD-03 Product Data

Solid Polymer;

Indoor air quality for solid surface seam and sealant products; S

Quartz Agglomerate Material;

SD-04 Samples

Material;

Counter Tops;

SD-06 Test Reports

Test Report Results

SD-07 Certificates

Qualifications

Indoor Air Quality for solid surface fabrication products; S

SD-10 Operation and Maintenance Data

Solid Polymer, Data Package 1;

Quartz Agglomerate Material, Data Package 1;

1.4 QUALITY ASSURANCE

1.4.1 Qualifications

To ensure warranty coverage, provide manufacturer certified solid surfacing fabricators to fabricate the solid surfacing material being utilized. Mark all fabrications with the fabricator's certification label affixed in an inconspicuous location. Minimum of 5 years of experience working with solid surfacing materials is required of fabricators. Submit solid surfacing material manufacturer's certification attesting to fabricator qualification approval.

1.4.2 Mock-ups

Submit Detail Fabrication Drawings indicating locations, dimensions, component sizes, fabrication and joint details, attachment provisions, installation details, and coordination requirements with adjacent work. Prior to final approval of shop drawings, provide a full-size mock-up of a typical counter top where multiple units are required. Include all solid surfacing material components required to provide a completed unit. Utilize finishes in patterns and colors as indicated; colors listed are not intended to limit the selection of equal colors from other manufacturers. in the mock-up. Should the mock-up not be approved, re-work or remake it until approval is secured. Remove rejected units from the jobsite. Approved mock-up may remain as part of the finished work.

1.5 DELIVERY, STORAGE, AND HANDLING

Do not deliver materials to project site until areas are ready for installation. Deliver components and materials to the site undamaged, in containers clearly marked and labeled with manufacturer's name. Store materials indoors and take adequate precautions to prevent damage to finished surfaces. Provide protective coverings to prevent physical damage or staining following installation, for duration of project.

1.6 WARRANTY

Provide manufacturer's warranty to repair or replace defective materials, excluding damages caused by physical or chemical abuse or excessive heat,

and workmanship for a period of 10 years from date of final acceptance of the work.

PART 2 PRODUCTS

2.1 MATERIAL

Submit detail fabrication drawings and installation drawings of each solid surfacing fabrication indicated. Include elevations, dimensions, clearances, details of construction and anchorage, and details of joints and connections.

Submit manufacturers' descriptive product data for each type of solid polymer fabrication and quartz agglomerate fabrication indicated. Include manufacturers' literature, finishes, profiles and thicknesses of materials.

Submit manufacturers' operations and maintenance data for each type of solid polymer fabrication and quartz agglomerate material fabrication in accordance with Section 01 78 23 OPERATIONS AND MAINTENANCE DATA.

2.1.1 Solid Surfacing Material

Provide solid polymer and quartz agglomerate material that is a homogeneous filled solid polymer; not coated, laminated or of a composite construction, complying with ICPA SS-1 and ICPA SS-1 for quartz agglomerate, except for composition. Provide material that meets or exceeds the minimum physical and performance properties specified. Superficial damage to a depth of 0.01 inch must be repairable by sanding or polishing. Material thickness is as indicated on the drawings; required minimum thickness is 1/4 inch. Submit a minimum 4 inch by 4 inch sample of each color and pattern for approval; include full range of color and pattern variation. Retain approved samples as a standard for this work. Submit test report results from an independent testing laboratory attesting that the submitted solid surfacing materials meet or exceed each of the specified performance requirements.

a. Horizontal Surfaces: 3/4 inch thick material

b. Vertical Surfaces: 1/2 inch thick material

c. Provide materials that meet the emissions requirements of CDPH SECTION 01350 (limit requirements for either office or classroom spaces regardless of space type). Provide certification or validation of indoor air quality for solid surface fabrication products.

2.1.2 Cast, 100 Percent Acrylic Polymer Solid Surfacing Material

Cast, 100 percent acrylic solid polymer material composed of acrylic polymer, mineral fillers, and pigments. Provide acrylic polymer that meets or exceeds the following minimum performance requirements:

PROPERTY	REQUIREMENT (min. or max.)	TEST PROCEDURE
Tensile Strength	4000 psi (max.)	ASTM D638

PROPERTY	REQUIREMENT (min. or max.)	TEST PROCEDURE
Hardness	55-Barcol Impressor (min.)	ASTM D2583
Thermal Expansion	.000023 in/in/F (max.)	ASTM D696
Boiling Water Surface Resistance	No Change	ANSI/NEMA LD 3-3.05
High Temperature Resistance	No Change	ANSI/NEMA LD 3-3.06
Impact Resistance (Ball drop)		ANSI/NEMA LD 3-303
1/4 inch sheet	36-inches, 1/2 lb ball, no failure	
1/2 inch sheet	140-inches, 1/2 lb ball, no failure	
3/4 inch sheet	200-inches, 1/2 lb ball, no failure	
Mold & Mildew Growth	No growth	ASTM G21
Bacteria Growth	No growth	ASTM G21
Liquid Absorption (Weight in 24 hrs.)	0.1 percent max.	ASTM D570
Flammability		ASTM E84
Flame Spread	25 max.	
Smoke Developed	30 max.	
Sanitation	"Food Contact" approval	NSF/ANSI 51
Flexural Strength	6,800 psi (min.)	ASTM D790

2.1.3 Acrylic-modified Polymer Solid Surfacing Material

Cast, solid polymer material composed of a formulation containing acrylic and polyester polymers, mineral fillers, and pigments. Provide acrylic polymer content not less than 5 percent and not more than 10 percent in order to meet the following minimum performance requirements:

PROPERTY	REQUIREMENT (min. or max.)	TEST PROCEDURE
Tensile Strength	4100 psi (max.)	ASTM D638
Hardness	50-Barcol Impressor (min.)	ASTM D2583

PROPERTY	REQUIREMENT (min. or max.)	TEST PROCEDURE
Thermal Expansion	.000023 in/in/F (max.)	ASTM D696
Boiling Water Surface Resistance	No Change	ANSI/NEMA LD 3-3.05
High Temperature Resistance	No Change	ANSI/NEMA LD 3-3.06
Impact Resistance (Ball drop)		ANSI/NEMA LD 3-303
1/4 inch sheet	36 inches, 1/2 lb ball, no failure	
1/2 inch sheet	140 inches, 1/2 lb ball, no failure	
3/4 inch sheet	200 inches, 1/2 lb ball, no failure	
Mold & Mildew Growth	No growth	ASTM G21
Bacteria Growth	No growth	ASTM G21
Liquid Absorption (Weight in 24 hrs.)	0.6 percent max.	ASTM D570
Flammability		ASTM E84
Flame Spread	25 max.	
Smoke Developed	100 max.	
Sanitation	"Food Contact" approval	NSF/ANSI 51
Flexural Strength	6,800 psi (min.)	ASTM D790

2.1.4 Quartz Agglomerate (or "Engineered Quartz") Solid Surfacing Material

Solid sheets consisting of quartz aggregates in an acrylic or polyester, or a combination of the two, resin binder (or matrix) that is solid and nonporous with integral color.

2.1.5 Material Patterns and Colors

Provide pattern and color for all solid surfacing material components and fabrications as indicated; colors listed are not intended to limit the selection of equal colors from other manufacturers. Provide products with consistent patterned color throughout thickness of the product.

2.1.6 Surface Finish

Provide a uniform appearance on exposed finished surfaces and edges. Exposed surface finish is polished; gloss rating of 55-80 .

2.2 ACCESSORY PRODUCTS

Provide accessory products, as specified below, as manufactured by the solid surfacing material manufacturer or as approved by the solid surfacing material manufacturer for use with the solid surfacing materials being specified.

2.2.1 Adhesives

Provide a two-part seam adhesive kit to create permanent, inconspicuous, non-porous, hard seams and joints by chemical bond between solid surfacing materials and components to create a monolithic appearance of the fabrication. Provide adhesive approved by the solid surfacing material manufacturer. Color-match adhesive to the surfaces being bonded where solid-colored, solid surfacing materials are being bonded together. Provide clear or color matched seam adhesive where particulate patterned, solid surfacing materials are being bonded together.

2.2.2 Seam and Sealant Emissions

Provide seam and other accessory materials that meet the emissions requirements of CDPH SECTION 01350 (limit requirements for either office or classroom spaces regardless of space type). Provide validation of indoor air quality for solid surface seam and sealant products.

2.2.3 Silicone Sealant

Provide silicone sealant, mildew-resistant, single-component, nonsag, plus 25 percent and minus 25 percent movement capability, acid-curing; ASTM C920, Type S, Grade NS, Class 25, Use NT; clear formulation; approved for use by the solid surfacing material manufacturer.

2.2.4 Conductive Tape

Provide manufacturer's standard conductive foil tape, 4 mils thick, applied around the edges of cut outs containing hot or cold appliances.

2.2.5 Insulating Tape

Provide manufacturer's standard insulating tape for use with drop-in food wells used in commercial food service applications to insulate solid surfacing material from hot or cold appliances.

2.2.6 Heat Reflective Tape

Provide heat reflective tape as recommended by the solid surfacing material manufacturer for use with cutouts for heat sources.

2.2.7 Mounting Hardware

Provide mounting hardware, including sink/bowl clips, inserts and fasteners for attachment of undermount sinks and lavatories.

2.3 FABRICATIONS

Provide factory or shop fabricate components to sizes and shapes indicated, to the greatest extent practical, in accordance with approved Shop Drawings and manufacturer's requirements. Provide factory cutouts for sinks, lavatories, and plumbing fixtures where indicated on the drawings. Contours and radii must be routed to template, with edges smooth. Defective and inaccurate work will be rejected. Submit product data indicating product description, fabrication information, and compliance with specified performance requirements for solid surfacing material, joint adhesive, sealants, and heat reflective tape.

2.3.1 Joints and Seams

Form joints and seams between solid surfacing material components using manufacturer's approved seam adhesive. Provide inconspicuous joints in appearance without voids to create a monolithic appearance.

2.3.2 Edge Finishing

Rout and finish component edges to a smooth, uniform appearance and finish. Provide edge shapes and treatments, including any inserts, as detailed on the drawings. Rout all cutouts, then sand all edges smooth. Repair or reject defective or inaccurate work.

2.3.3 Counter Top Splashes

Fabricate backsplashes and end splashes from 1/2 inch thick solid surfacing material to be in conformance with dimensions and shapes as indicated. Provide backsplashes and end splashes for all counter tops . Shop fabricate backsplashes and provide permanently attached .

2.3.3.1 Permanently Attached Backsplash

Provide permanently attached backsplashes straight with seam adhesive to form a 90 degree transition .

2.3.3.2 End Splashes

Provide end splashes loose for installation at the jobsite after horizontal surfaces to which they are to be attached have been installed.

2.3.4 Counter Tops

Fabricate all solid surfacing material, counter top components from 1/2 inch. Attach 2 inch wide reinforcing strip of solid surfacing material under each horizontal counter top seam. Submit a minimum 1 foot wide by 6 inch deep, full size sample for each type of counter top shown on the project drawings; include the edge profile and backsplash as detailed on the drawings and at least one seam. Retain approved sample as standard for this work. Provide mitered and eased edge profile.

PART 3 EXECUTION

3.1 INSTALLATION

3.1.1 Components

Install all components and fabricated units plumb, level, and rigid. Make

field joints between solid surfacing material components using solid surfacing material manufacturer's approved seam adhesives, to provide a monolithic appearance with joints inconspicuous in the finished work. Attach metal or vitreous china sinks and lavatory bowls to counter tops using solid surfacing material manufacturer's recommended clear silicone sealant and mounting hardware. Install solid polymer sinks and bowls using a color-matched seam adhesive.

3.1.1.1 Loose Counter Top Splashes

Mount loose splashes in the locations noted on the drawings. Adhere loose splashes to the counter top with a color matched silicone sealant when the solid surfacing material components are solid colors. Use a clear silicone sealant to provide adhesion of particulate patterned solid surfacing material splashes to counter tops.

3.1.1.2 Wall Panels & Panel Systems

Installation of wall panels and system components to substrates must include the use of a specified panel adhesive. Use specified seam adhesive to adhere all solid surfacing material components to each other with the exception of expansion joints and inside corners. All inside corners and expansion joints between solid surfacing material components must be joined with specified silicone sealant. All joints between solid surfacing material components and non-solid polymer surfaces must be sealed with specified silicone sealant.

3.1.2 Silicone Sealant

Use specified silicone sealant to seal all expansion joints between solid surfacing material components and all joints between solid surfacing material components and other adjacent surfaces such as walls, floors, ceiling, and plumbing fixtures. Provide sealant bead smooth and uniform in appearance and minimum size necessary to bridge any gaps between the solid surfacing material and the adjacent surface. Provide continuous bead and run the entire length of the joint being sealed.

3.2 CLEAN-UP

Components must be cleaned after installation and covered to protect against damage during completion of the remaining project items. Damaged components must be repaired or replaced at the Contractor's sole expense.

-- End of Section --

SECTION 07 24 00

EXTERIOR INSULATION AND FINISH SYSTEMS
08/23

PART 1 GENERAL

1.1 REFERENCES

The publications listed below form a part of this specification to the extent referenced. The publications are referred to within the text by the basic designation only.

ASTM INTERNATIONAL (ASTM)

ASTM B117	(2019) Standard Practice for Operating Salt Spray (Fog) Apparatus
ASTM C67/C67M	(2023a) Standard Test Methods for Sampling and Testing Brick and Structural Clay Tile
ASTM C150/C150M	(2024) Standard Specification for Portland Cement
ASTM C473	(2019) Standard Test Methods for Physical Testing of Gypsum Panel Products
ASTM C578	(2023) Standard Specification for Rigid, Cellular Polystyrene Thermal Insulation
ASTM C847	(2014a) Standard Specification for Metal Lath
ASTM C920	(2018) Standard Specification for Elastomeric Joint Sealants
ASTM C1186	(2022; E 2023) Standard Specification for Flat Fiber-Cement Sheets
ASTM C1325	(2022; E 2023) Standard Specification for Fiber-Mat Reinforced Cementitious Backer Units
ASTM D968	(2022) Standard Test Methods for Abrasion Resistance of Organic Coatings by Falling Abrasive
ASTM D2247	(2015; R 2020) Standard Practice for Testing Water Resistance of Coatings in 100?Percent Relative Humidity
ASTM D3273	(2021) Standard Test Method for Resistance to Growth of Mold on the Surface of Interior Coatings in an Environmental Chamber
ASTM E84	(2023) Standard Test Method for Surface Burning Characteristics of Building

	Materials
ASTM E136	(2024b) Standard Test Method for Assessing Combustibility of Materials Using a Vertical Tube Furnace at 750 Degrees C
ASTM E330/E330M	(2014; R 2021) Standard Test Method for Structural Performance of Exterior Windows, Doors, Skylights and Curtain Walls by Uniform Static Air Pressure Difference
ASTM E331	(2000; R 2023) Standard Test Method for Water Penetration of Exterior Windows, Skylights, Doors, and Curtain Walls by Uniform Static Air Pressure Difference
ASTM E695	(2022) Standard Test Method of Measuring Relative Resistance of Wall, Floor, and Roof Construction to Impact Loading
ASTM E2098/E2098M	(2013; R 2023) Standard Test Method for Determining Tensile Breaking Strength of Glass Fiber Reinforcing Mesh for Use in Class PB Exterior Insulation and Finish Systems (EIFS), after Exposure to a Sodium Hydroxide Solution
ASTM E2486/E2486M	(2022) Standard Test Method for Impact Resistance of Class PB and PI Exterior Insulation and Finish Systems (EIFS)
ASTM E2570/E2570M	(2007; R 2019) Standard Test Methods for Evaluating Water-Resistive Barrier (WRB) Coatings Used under Exterior Insulation and Finish Systems (EIFS) or EIFS with Drainage
ASTM G153	(2013; R 2021) Standard Practice for Operating Enclosed Carbon Arc Light Apparatus for Exposure of Nonmetallic Materials
INTERNATIONAL CODE COUNCIL (ICC)	
ICC IBC	(2024) International Building Code
NATIONAL FIRE PROTECTION ASSOCIATION (NFPA)	
NFPA 268	(2022) Standard Test Method for Determining Ignitability of Exterior Wall Assemblies Using a Radiant Heat Energy Source
NFPA 285	(2023) Standard Fire Test Method for Evaluation of Fire Propagation Characteristics of Exterior Wall Assemblies Containing Combustible Components

1.2 SYSTEM DESCRIPTION AND REQUIREMENTS

The exterior insulation and finish system (EIFS) must be a job-fabricated, drainable, exterior wall covering consisting of sheathing, air and moisture barrier, insulation board, reinforcing fabric, base coat, finish coat, adhesive and mechanical fasteners as applicable. The system components must be compatible with each other and with the substrate as recommended or approved by, and the products of, a single manufacturer regularly engaged in furnishing Exterior Insulation and Finish Systems. All materials must be installed by an applicator approved by the system manufacturer. EIFS must be Class PB and must be as selected by Contracting Officer's color and as selected by Contracting Officer finish.

1.2.1 System Requirements and Tests

The system must meet the performance requirements as verified by the tests listed below. Where a wall system of similar type, size, and design as specified for this project has been previously tested under the condition specified herein, the resulting test reports may be submitted in lieu of job specific tests.

1.2.1.1 Water Penetration

Test the system for water penetration by uniform static air pressure in accordance with ASTM E331. There must be no penetration of water beyond the plane of the base coat/EPS board interface after 15 minutes at 6.4 psf, or 20 percent of positive design wind pressure, whichever is greater.

1.2.1.2 Wind Load Test

Test the system for wind load by uniform static air pressure in accordance with ASTM E330/E330M (procedure A) to a minimum pressure of 25 psf. There must be no permanent deformation, delamination, or other deterioration.

1.2.1.3 Full Scale or Intermediate Scale Fire Test

Conduct wall fire test using apparatus, specimen, performance criteria, and procedure in accordance with NFPA 285 when required by ICC IBC 2603.5.5. The following requirements must be met:

a. No vertical spread of flame within core of panel from one story to the next.

b. No flame spread over the exterior surface.

c. No vertical flame spread over the interior surface from one story to the next.

d. No significant lateral spread of flame from compartment of fire origin to adjacent spaces.

1.2.1.4 Mock-Up Installation of EIFS

Complete wall mock-up installation 4 ft high by 4 ft wide, including typical control joints and at least one window opening. Control joints to be filled with sealant of type, manufacturer, and color selected. Construct mock-up installation at job site. Build mock-up to comply with the following requirements, using materials indicated for the completed

work:

a. Locate mock-up installation(s) in the location and size as directed by the Contracting Officer.

b. Demonstrate the proposed range of color, texture, thickness, insulation, and workmanship.

c. Obtain Contracting Officer's written approval of mock-up before starting fabrication of work.

d. Maintain mock-up installation(s) during construction as a standard for judging the completed work by protecting them from weather and construction activities.

e. When directed, demolish and remove mock-up from the site.

1.2.2 Component Requirements and Tests

The components of the system must meet the performance requirements as verified by the tests listed below.

1.2.2.1 Surface Burning Characteristics

Conduct ASTM E84 test on samples consisting of base coat, reinforcing fabric, and finish coat. Cure for 28 days. The flame spread index must be 25 or less and the smoke developed index must be 450 or less.

1.2.2.2 Radiant Heat

The system must be tested in accordance with NFPA 268 on both the minimum and maximum thickness of insulation intended for use with no ignition during the 20-minute period.

1.2.2.3 Impact Resistance

a. Class PB Systems: Hemispherical Head Test; 28 day cured specimen of PB EIFS in accordance with ASTM E2486/E2486M. The test specimen must exhibit no broken reinforcing fabric in accordance with ASTM E2486/E2486M at an impact of 25 in-lb.

b. Impact Mass: Test 28 day cured specimen of PM EIFS in accordance with ASTM E695. The test specimen must exhibit no cracking or denting after twelve impacts by 30 lbs lead shot mass from 6 in to 6 ft drop heights in 6 in intervals.

1.2.3 Sub-Component Requirements and Tests

Unless otherwise stated, the test specimen must consist of reinforcing mesh, base coat, and finish coat applied in accordance with manufacturer's printed recommendations to the insulation board to be used on the building. For mildew resistance, only the finish coat is applied onto glass slides for testing. The specimen must be suitably sized for the apparatus used and be allowed to cure for a minimum of 28 days prior to testing.

1.2.3.1 Abrasion Resistance

Test in accordance with ASTM D968, Method A. Test a minimum of two specimens. After testing, the specimens must show only very slight smoothing, with no loss of film integrity after 132 gallons of sand.

1.2.3.2 Accelerated Weathering

Test in accordance with ASTM G153, Cycle 1. After 2000 hours specimens must exhibit no visible cracking, flaking, peeling, blistering, yellowing, fading, or other such deterioration.

1.2.3.3 Mildew Resistance

Test in accordance with ASTM D3273. The specimen must consist of the finish coat material, applied to clean 3 inch by 4 inch glass slides and must be allowed to cure for 28 days. After 28 days of exposure, the specimen must not show any growth.

1.2.3.4 Salt Spray Resistance

Test in accordance with ASTM B117. The specimen must be a minimum of 4 inch by 6 inch and must be tested for a minimum of 300 hours. After exposure, the specimen must exhibit no observable deterioration, such as chalking, fading, or rust staining.

1.2.3.5 Water Resistance

Test in accordance with ASTM D2247. The specimen must be a minimum of 4 inch by 6 inch. After 14 days, the specimen must exhibit no cracking, checking, crazing, erosion, blistering, peeling, or delamination.

1.2.3.6 Absorption-Freeze-Thaw

Class PB systems must be tested in accordance with ASTM E2570/E2570M for 60 cycles of freezing and thawing. After testing, the specimen must exhibit no cracking, checking, or splitting, and negligible weight gain. Class PM systems must be tested in accordance with ASTM C67/C67M for 50 cycles of freezing and thawing. After testing, the specimens must exhibit no cracking or checking and have negligible weight gain.

1.2.3.7 Sample Boards

Unless otherwise stated, provide sample EIFS Component 12 by 24 inches, on sheathing board, including finish color and texture, typical joints and sealant. If more than one color, finish, or pattern is used, provide one sample for each. The test specimen must consist of reinforcing mesh, base coat, and finish coat applied in accordance with manufacturer's printed recommendations to the insulation board to be used on the building.

1.2.4 Moisture Analysis

Perform a job specific vapor transmission analysis based on project specific climate and specified wall components and materials. Indicate the temperatures and relative humidities for the inside and outside of the building; a complete listing of the building components, their thickness, thermal resistance and permeance, as well as building location and use. If a mathematical model was used for the analysis, include the name of the model and the supplier/developer.

1.3 SUBMITTALS

Government approval is required for submittals with a "G" or "S" classification. Submittals not having a "G" or "S" classification are for information only. When used, a code following the "G" classification identifies the office that will review the submittal for the Government. Submit the following in accordance with Section 01 33 00 SUBMITTAL PROCEDURES:

SD-02 Shop Drawings

Shop Drawings;

SD-03 Product Data

Sheathing Board

Thermal Insulation

Adhesive

Mechanical Fasteners

Accessories

Base Coat

Portland Cement

Reinforcing Fabric

Finish Coat

Joint Sealant

Sealant Primer

Bond Breaker

Backer Rod

Insulation Board

Warranty

SD-04 Samples

Sample Boards;

Color and Texture

Mock-up Installation of EIFS;

SD-05 Design Data

Moisture Analysis Calculations

SD-06 Test Reports

Abrasion Resistance

Accelerated Weathering

Impact Resistance

Mildew Resistance

Salt Spray Resistance

Water Vapor Transmission

Absorption-Freeze-Thaw

Wall Fire Test

Water Penetration

Water Resistance

Full Scale or Intermediate Scale Fire Test

Surface Burning Characteristics

Radiant Heat

Substrate

Wind Load Test

SD-07 Certificates

Qualifications of EIFS Manufacturer

Qualification of EIFS Installer

Qualification of Sealant Applicator

Qualifications of Third-Party Inspector

Inspection Checklist;

SD-08 Manufacturer's Instructions

Manufacturer's Instructions

1.4 QUALITY CONTROL

1.4.1 Qualifications of EIFS Manufacturer

The EIFS must be the product of a manufacturer who has been in the practice of manufacturing and designing EIFS for a period of not less than 3 years, and has been involved in at least five projects similar to this project in size, scope, and complexity, in the same or a similar climate as this project.

1.4.2 Qualification of EIFS Installer

The EIFS Installer must be trained by the EIFS manufacturer to perform the installation of the System and must have successfully installed at least five projects at or near the size and complexity of this project. The Contractor must employ qualified workers trained and experienced in installing the manufacturer's EIFS.

1.4.3 Qualification of Sealant Applicator

The sealant applicator must be experienced and competent in the installation of high performance industrial and commercial sealants and must have successfully installed at least five projects at or near the size and complexity of this project. Also provide certification that sealant applicator is approved by the EIFS Manufacturer.

1.4.4 Qualifications of Third-Party Inspector

Submit evidence that third-party inspector has current certification from the Exterior Design Institute or equal inspector certification as inspector for the installation of EIFS.

1.4.5 Insulation Board

Insulation Board must be approved and labeled under third party quality program as required by applicable building code.

1.4.6 Shop Drawings

Submit shop drawings for EIFS. Show wall layout, construction and expansion joints, decorative grooves, layout of sheathing board, thermal insulation board, and reinforcing mesh and strip reinforcing fabric; joint and flashing details; details at wall penetrations; types and location of fasteners; details at windows and doors; and details at base, corners, projecting features, abutments of lower walls with higher walls.

1.4.7 Pre-Installation Conference

After approval of submittals and before commencing any work on the EIFS, including installation of any insulation, and associated work, the Contracting Officer will hold a pre-installation conference to review:

a. Drawings, specifications, and samples;

b. Procedure for on-site inspection and acceptance of EIFS substrate and pertinent details (for example, mock-up installation);

c. Contractor's plan for coordination of work of the various trades involved in providing EIF system and other components;

d. Inspection procedures; and

e. Safety requirements.

Pre-installation conference must be attended by the Contractor, EIFS Q.C. Specialist (EIFS Inspector), and all personnel directly responsible for installation of the EIF system, including sealant applicator, and personnel responsible for related work, such as flashing and sheet metal, windows and doors, and a representative of the EIFS manufacturer. Before

beginning EIFS work, the Contractor must confirm in writing the resolution of conflicts among those attending the pre-installation conference.

1.5 DELIVERY AND STORAGE

Deliver materials to job site in original unopened packages, marked with manufacturer's name, brand name, and description of contents. Store materials off the ground and in accordance with the manufacturer's recommendations in a clean, dry, well-ventilated area. Protect stored materials from rain, sunlight, and excessive heat. Keep coating materials which would be damaged by freezing at a temperature not less than 40 degrees F. Do not expose insulation board to flame or other ignition sources.

1.6 ENVIRONMENTAL CONDITIONS

a. Do not prepare materials or apply EIFS during inclement weather unless appropriate protection is provided. Protect installed materials from inclement weather until they are dry.

b. Apply sealants and wet materials only at ambient temperatures of 40 degrees F or above, unless supplemental heat is provided. The system must be protected from inclement weather and maintain this temperature for a minimum of 24 hours after installation.

c. Do not leave insulation board exposed to sunlight after installation.

1.7 WARRANTY

Furnish manufacturer's standard warranty for the EIFS. Warranty must run directly to Government and cover a period of not less than 5 years from date Government accepted the work.

Warranty submittal must include joint and other details, such as end conditions, corners, windows, and parapet. Include shelf life and recommended cleaning solvents in data for sealants. Include Safety Data Sheets (SDS)for all components of the EIFS. The SDS must be available at the job site.

PART 2 PRODUCTS

2.1 COMPATIBILITY

Provide all materials compatible with each other and with the substrate, and as recommended by EIFS manufacturer.

2.2 SHEATHING BOARD

2.2.1 Fiber Reinforced Cement Sheathing Board

a. Meet ASTM C1186, Type A, Grade , or.

b. Meet ASTM C1325, Type A, Flexural Strength

c. Non-combustible in accordance with ASTM E136.

d. Nail Pull Resistance: No less than 120 lb when tested in accordance with ASTM C473.

e. Thickness no less than 1/2 inch.

f. Water Absorption not to exceed 17 percent.

2.3 ADHESIVE

Manufacturer's standard product, including primer as required, must be compatible with substrate and insulation board to which the system is applied.

2.4 LATHING AND FURRING

Conform to ASTM C847, 2.5 lb/sqyd, self-furring, galvanized.

2.5 MECHANICAL FASTENERS

Corrosion resistant and as approved by EIFS manufacturer. Select fastener type and pattern based on applicable wind loads and substrate into which fastener will be attached, to provide the necessary pull-out, tensile, and shear strengths.

2.6 THERMAL INSULATION

2.6.1 Manufacturer's Recommendations

Provide only thermal insulation recommended by the EIFS manufacturer for the type of application intended.

2.6.2 Insulation Board

Insulation board must be standard product of manufacturer and must be compatible with other system components. Boards must be factory marked individually with the manufacturer's name or trademark, the material specification number, the R-value at 75 degree F, and thickness. No layer of insulation can be less than 3/4 inch thick. The maximum thickness of all layers must not exceed 4 inches. Insulation Board must be certified as aged, in block form, prior to cutting and shipping, a minimum of 6 weeks by air drying, or equivalent.

a. Thermal resistance: As indicated on drawings.

b. Insulating material: ASTM C578 Type I as recommended by the EIFS manufacturer and treated to be compatible with other EIFS components. Age insulation by air drying a minimum of 6 weeks prior to cutting and shipping.

c. Drainage: Preform channels into the interior face of insulation board or provide polypropylene drainage lath spacer to provide water drainage system.

2.7 BASE COAT

Manufacturer's standard product and compatible with other system components.

2.8 PORTLAND CEMENT

Conform to ASTM C150/C150M, Type I or II as required, fresh and free of lumps, and approved by the systems manufacturer.

2.9 REINFORCING FABRIC

Reinforcing fabric mesh must be alkali-resistant, balanced, open weave, glass fiber fabric made from twisted multi-end strands specifically treated for compatibility with the other system materials, and comply with ASTM E2098/E2098M and as recommended by EIFS manufacturer.

2.10 FINISH COAT

Manufacturer's standard product conforming to the requirements in the paragraph on Sub-Component Requirements and Tests. For color consistency, use materials from the same batch or lot number.

2.11 SEALANT PRIMER

Non-staining, quick-drying type recommended by sealant manufacturer and EIFS manufacturer.

2.12 ACCESSORIES

Conform to recommendations of EIFS manufacturer, including trim, edging, anchors, and expansion joints. All metal items and fasteners to be corrosion resistant.

2.13 JOINT SEALANT

Non-staining, quick-drying type meeting ASTM C920, as Type S or M, minimum Grade NS, minimum Class 25 and compatible with the finish system type and grade, and recommended by both the sealant manufacturer and EIFS manufacturer.

2.14 BOND BREAKER

As required by EIFS manufacturer and recommended by sealant manufacturer and EIFS manufacturer.

2.15 BACKER ROD

Closed cell polyethylene free from oil or other staining elements and as recommended by sealant manufacturer and EIFS manufacturer. Do not use absorptive materials as backer rod. Size the backer rod 25 percent larger than the width of the joint.

PART 3 EXECUTION

3.1 EXAMINATION

Examine substrate and existing conditions to determine that the EIFS can be installed as required by the EIFS manufacturer and that all work related to the EIFS is properly coordinated. Surface must be sound and free of oil, loose materials or protrusions which will interfere with the system installation. If deficiencies are found, notify the Contracting Officer and do not proceed with installation until the deficiencies are corrected. The substrate must be plane, with no deviation greater than 1/4 inch when tested with a 10 foot straightedge. Determine flatness, plumbness, and any other conditions for conformance to manufacturer's instructions.

3.2 SURFACE PREPARATION

Prepare existing surfaces for application of the EIFS to meet flatness tolerances and surface preparation according to manufacturer's installation instructions but provide a flatness of not more than 1/4 inch in 10 feet. Provide clean surfaces free of oil and loose material without protrusions adversely affecting the installation of the insulation board. For adhesively attached EIFS, existing deteriorated paint must be removed. Due to substrate conditions or as recommended by the system manufacturer, a primer may be required. Apply the primer to existing surfaces as recommended by the manufacturer. Use masking tape to protect areas adjacent to the EIFS to prevent base or finish coat to be applied to areas not intended to be covered with the EIFS. The Contractor must not proceed with the installation until all noted deficiencies of the substrate are corrected.

3.3 INSTALLATION

Install EIFS as indicated, comply with manufacturer's instructions except as otherwise specified, and in accordance with the shop drawings. Submit manufacturer's standard printed instructions for the installation of the EIFS; include requirements for condition and preparation of substrate, installation of EIFS, and requirements for sealants and sealing. Also include detailed finish repair procedures and information regarding compatibility of sealants with base and finish coatings.

EIFS must be installed only by an applicator trained by the EIFS manufacturer. Specifically, include all manufacturer recommended provisions regarding flashing and treatment of wall penetrations. Any materials that show visual evidence of biological growth due to the presence of moisture must not be installed on the building project.

3.3.1 Insulation Board

Unless otherwise specified by the system manufacturer, place the long edge horizontally from level base line. Stagger vertical joints and interlock at corners. Butt joints tightly. Provide flush surfaces at joints. Offset insulation board joints from joints in sheathing by at least 8 inches. Align drainage channels of integral drainage system or provide polypropylene drainage lath space to provide a path for any water weeped from behind the insulation to escape wall construction. Use L-shaped insulation board pieces at corners of openings. Joints of insulation must be butted tightly. Surfaces of adjacent insulation boards must be flush at joints. Gaps greater than 1/16 inch between the insulation boards must be filled with slivers of insulation. Uneven board surfaces with irregularities projecting more than 1/16 inch must be rasped in accordance with the manufacturer's instructions to produce an even surface. Attach insulation board as recommended by manufacturer. The adhered insulation board must be allowed to remain undisturbed for 24 hours prior to proceeding with the installation of the base coat/reinforcing mesh, or longer if necessary for the adhesive to dry. However, do not leave insulation board exposed longer than recommended by insulation manufacturer.

3.3.1.1 Adhesively Fastened Insulation Boards

Apply insulation board using adhesive spread with a notched trowel to the back of the insulation boards in accordance with the manufacturer’s instructions.

3.3.2 Base Coat and Reinforcing Fabric Mesh,

3.3.2.1 Class PB Systems

Allow the adhered insulation board to dry for 24 hours, or longer if necessary, prior to proceeding with the installation of the base coat/reinforcing fabric mesh. Install reinforcing fabric in accordance with manufacturer's instructions. Mix base coat in accordance with the manufacturer's instructions and apply to insulated wall surfaces to the thickness specified by the system manufacturer and provide any other reinforcement recommended by EIFS manufacturer. Trowel the reinforcing fabric mesh into the wet base coat material. Fully embed the mesh in the base coat. When properly worked-in, the pattern of the reinforcing fabric mesh must not be visible. Provide diagonal reinforcement at opening corners. Back-wrap or edge wrap all terminations of the EIFS. Overlap the reinforcing fabric mesh a minimum of 2.5 inches on previously installed mesh, or butted, in accordance with the manufacturer’s instructions.

3.3.3 Finish Coat

The base coat/reinforcing mesh must be allowed to dry a minimum of 24 hours prior to application of the finish coat. Surface irregularities in the base coat, such as trowel marks, board lines, and reinforcing mesh laps, must be corrected prior to the application of the finish coat. Apply and level finish coat in one operation. Obtain final texture by trowels, floats, or by spray application as necessary to achieve the required finish matching approved mock-up installation. Apply the finish coat to the dry base coat maintaining a wet edge at all times to obtain a uniform appearance. The thickness of the finish coat must be in accordance with the system manufacturer’s current published instructions. Apply finish coat so that it does not cover surfaces to which joint sealants are to be applied.

3.4 JOINT SEALING

Seal EIFS at openings as recommended by the system manufacturer. Apply sealant only to the base coat with EIFS Manufacturer's color coating. Do not apply sealant to the finish coat.

3.4.1 Surface Preparation, Backer Rod, and Primer

Immediately prior to application, remove loose matter from joint. Ensure that joint is dry and free of finish coat, or other foreign matter. Install backer rod. Apply primer as required by sealant and EIFS manufacturer. Check that joint width is as shown on drawings but in no case can it be less than 0.5 inch for perimeter seals and 0.75 inch for expansion joints. The width must not be less than 4 times the anticipated movement. Check sealant manufacturer's recommendations regarding proper width to depth ratio.

3.4.2 Sealant

Do not apply sealant until all EIFS coatings are fully dry. Apply sealant in accordance with sealant manufacturer's instructions with gun having nozzle that fits joint width. Do not use sealant that has exceeded shelf life or cannot be discharged in a continuous flow. Completely fill the joint solidly with sealant without air pockets so that full contact is made with both sides of the joint. Tool sealant with a round instrument

that provides a concave profile and a uniformly smooth and wrinkle free sealant surface. Do not wet tool the joint with soap, water, or any other liquid tooling aid. During inclement weather, protect the joints until sealant application. Use particular caution in sealing joints between window and door frames and the EIFS wall and at all other wall penetrations. Clean all surfaces to remove excess sealant.

3.5 FIELD QUALITY CONTROL

Throughout the installation, the Contractor must establish and maintain an inspection procedure to assure compliance of the installed EIFS with Contract requirements. Work not in compliance must be removed and replaced or corrected in an approved manner. The inspection procedures, from acceptance of deliveries through installation of sealants and final acceptance must be performed by a qualified inspector trained by the manufacturer. No work on the EIFS is allowed unless the inspector is present at the job site.

3.5.1 Third-Party Inspection

Provide full-time third-party inspection during the entire process of installing the EIFS, from examination through cleanup. The third-party inspector must be certified by the Exterior Design Institute (EDI), AWCI, or by an equivalent independent party and must be trained in the proper installation of EIFS.

3.5.2 Inspection Checklist

During the installation and at the completion of installation, perform inspections covering at the minimum all applicable items enumerated on the attached checklist. The inspector must initial and date all applicable items, sign the checklist, and submit to the Contracting Officer daily.

CHECKLIST

Item	Description	Appr'd/Date
a.	Materials are handled and stored correctly.	_____ ____
b.	Environmental conditions are within specified limits, including temperature not below 4 degrees C (40 degrees F), and the work is protected from the elements as required.	_____ _____
c.	Preparation and installation is performed by qualified personnel using the correct tools.	_____ _____
d.	Adjacent areas to which EIFS is not to be applied (such as on window and door frames) are protected with masking tape, plastic films, drop cloths, or other covering to prevent accidental application of EIFS materials.	_____ ____
e.	Control, expansion and aesthetic joints are installed as indicated or recommended. Accessories are properly installed.	_____ ____
f.	Substrate is in-plane, properly attached, clean, dry, and free of contaminants. Concrete substrate is free of efflorescence.	_____ ____

CHECKLIST

Item	Description	Appr'd/Date
g.	Materials are mixed thoroughly and in proper proportions.	_____
h.	Adhesive is applied in sufficient quantity with proper-size notched trowel.	_____
i.	Mechanical attachments have proper spacing, layout and fastener depth.	_____
j.	Insulation boards are tightly abutted, in running bond pattern, with joints staggered with the sheathing, board corners interlocked, L-shaped boards around openings, edges free of adhesive, and provision for joints. Gaps are filled and surfaces rasped.	_____
k.	Insulation adhesive must be allowed to dry (a minimum of 24-hours) prior to the application of the base coat.	_____
l.	Reinforcing fabric mesh is properly back-wrapped at terminations.	_____
m.	Reinforcing fabric mesh is fully embedded and properly placed. Corners are reinforced. Openings are diagonally reinforced. Mesh overlaps minimum 65 mm (2-1/2 inches).	_____
n.	Base coat thickness is within specified limits.	_____
o.	The base coat/reinforcing fabric mesh must be allowed to dry (a minimum of 24-hours) prior to the application of the finish coat.	_____
p.	Finish coat is applied with sufficient number of personnel and stopped at suitable points. Floats and methods of texturing are uniform.	_____
q.	All flashings are properly installed.	_____
r.	All joints are properly sealed in their entire length at time and under environmental conditions as specified by the manufacturer.	_____
s.	All scaffolding, equipment, materials, debris and temporary protection are removed from site upon completion.	_____

Name of Inspector:_____ Signed:_____
Date:_____

3.6 CLEANUP

Upon completion, remove all scaffolding, equipment, materials and debris from site. Remove all temporary protection installed to facilitate installation of EIFS.

P2# 519087 - DSSC DLA Repair Building 27
Columbus, OH

-- End of Section --

P2# 519087 - DSSC DLA Repair Building 27
Columbus, OH

SECTION 07 27 19.01

SELF-ADHERING AIR BARRIERS
08/23, CHG 1: 08/24

PART 1 GENERAL

1.1 REFERENCES

The publications listed below form a part of this specification to the extent referenced. The publications are referred to within the text by the basic designation only.

AIR BARRIER ASSOCIATION OF AMERICA (ABAA)

ABAA Accreditation	Accreditation
ABAA QAP	Quality Assurance Program

ASTM INTERNATIONAL (ASTM)

ASTM D4263	(1983; R 2018) Standard Test Method for Indicating Moisture in Concrete by the Plastic Sheet Method
ASTM D4541	(2022) Standard Test Method for Pull-Off Strength of Coatings Using Portable Adhesion Testers

NATIONAL FIRE PROTECTION ASSOCIATION (NFPA)

NFPA 285	(2023) Standard Fire Test Method for Evaluation of Fire Propagation Characteristics of Exterior Wall Assemblies Containing Combustible Components

1.2 RELATED REQUIREMENTS

Coordinate the requirements of Section 07 27 10 BUILDING AIR BARRIER SYSTEM and other building enclosure sections to provide a complete building air barrier system. Submit all materials, components, and assemblies of the air barrier system together as one complete submittal package.

1.3 SUBMITTALS

Government approval is required for submittals with a "G" or "S" classification. Submittals not having a "G" or "S" classification are for information only. When used, a code following the "G" classification identifies the office that will review the submittal for the Government. Submit the following in accordance with Section 01 33 00 SUBMITTAL PROCEDURES:

SD-01 Preconstruction Submittals

Qualifications of Manufacturer;

Qualifications of Installer;

SD-02 Shop Drawings

Self-adhering Air Barrier Shop Drawings;

SD-03 Product Data

Self-adhering Air Barrier;

Primers, Adhesives, and Mastics;

Safety Data Sheets;

SD-04 Samples

Self-adhering Air Barrier System Mockup;

SD-06 Test Reports

Field Peel Adhesion Test;

Flame Propagation of Wall Assemblies;

Site Inspections and Testing;

SD-08 Manufacturer's Instructions

Self-adhering Air Barrier Manufacturer's Printed Instructions;

Primers, Adhesives, and Mastics;

1.4 MISCELLANEOUS REQUIREMENTS

For self-adhering air barrier provide the following:

1.4.1 Shop Drawings

Submit self-adhering air barrier shop drawings showing locations and extent of air barrier assemblies and details of all typical conditions, intersections with other building enclosure assemblies and materials, and membrane counterflashings. Show details for bridging of gaps in construction, treatment of inside and outside corners, expansion joints, methods of attachment of materials covering the self-adhered barrier without compromising the barrier. Indicate how miscellaneous penetrations such as conduit, pipes, electric boxes, brick ties, and similar items will be sealed.

1.4.2 Product Data

Submit manufacturer's technical data indicating compliance with performance and environmental requirements in Part 2 of this specification. Also submit self-adhering air barrier manufacturer's printed instructions for evaluating, preparing, and treating substrates, temperature and other limitations of installation conditions, safety requirements for installation, and Safety Data Sheets. Indicate flame and smoke spread ratings for all products.

1.4.3 Mockup

Provide a self-adhering air barrier system mockup. Apply product in an area designated by the Contracting Officer. Apply an area of not less than 54 square feet. Include all components specified as representative of the complete system. Notify the Contracting Officer a minimum of 48 hours prior to the test application. Select a test area representative of conditions to be covered including window or door openings, wall to ceiling transitions, flashings, and penetrations, as applicable.

1.4.4 Test Reports

Submit test reports indicating that field peel-adhesion tests on all materials have been performed and the changes made, if required, in order to achieve successful and lasting adhesion. Submit test reports for flame propagation of wall assemblies tested in accordance with NFPA 285.

1.5 DELIVERY, STORAGE, AND HANDLING

1.5.1 Delivery

Deliver and store materials in sufficient quantity to allow for uninterrupted flow of work. Inspect materials delivered to the site for damage and store out of weather. Deliver materials to the jobsite in their original unopened packages, clearly marked with the manufacturer's name, brand designation, description of contents, and shelf life of containerized materials. Store and handle to protect from damage.

1.5.2 Storage

Inspect materials delivered to the site for damage; unload and store out of weather in manufacturer's original packaging. Store only in dry locations, not subject to open flames or sparks, and easily accessible for inspection and handling. Protect stored materials from direct sunlight. Keep materials sealed and separated from absorptive materials, such as wood and insulation.

1.6 QUALITY ASSURANCE

1.6.1 Qualifications of Manufacturer

Submit documentation verifying that the manufacturer of the self-adhering air barrier is currently accredited by Air Barrier Association of America (ABAA Accreditation https://www.airbarrier.org/).

1.6.2 Qualifications of Installer

Submit documentation verifying that installers of the self-adhering air barrier are currently certified in accordance with the ABAA QAP Quality Assurance Program (https://www.airbarrier.org/qap/).

1.6.3 Field Peel Adhesion Test

Perform a field peel-adhesion test on the construction mockup. Test the self-adhering air barrier for adhesion in accordance with ASTM D4541 using a Type II pull tester except use a disk that is 4 inches in diameter and cut through the membrane to separate the material attached to the dish from the surrounding material. Perform test after curing period in accordance with manufacturer's written recommendations. Record mode of

failure and area which failed in accordance with ASTM D4541. Compare adhesion values with the manufacturer's established minimum values for the particular combination of material and substrate. Indicate on the inspection report whether the manufacturer's requirement has been met. Where the manufacturer has not declared a minimum adhesion value for their product and substrate combination, the inspector must record actual values.

1.7 PRECONSTRUCTION MEETING

Conduct a preconstruction meeting a minimum of two weeks prior to commencing work specified in this specification Section. Agenda must include, at a minimum, construction and testing of mockup, sequence of construction, coordination with substrate preparation, materials approved for use, compatibility of materials, coordination with installation of adjacent and covering materials, and details of construction. Attendance is required by representatives of related trades including covering materials, substrate materials, adjacent materials, and materials and components of the air barrier system.

1.8 ENVIRONMENTAL CONDITIONS

1.8.1 Temperature

Install air barrier within the range of ambient and substrate temperatures as recommended in writing by the air barrier manufacturer. Verify that the surface to receive self-adhering air barrier is dry for a minimum of 48 hours prior to the installation of the barrier. Do not apply air barrier to damp or wet substrates. Do not apply during inclement weather or when ice, frost, surface moisture, or visible dampness is present on surfaces to be covered, or when precipitation is imminent.

1.8.2 Exposure to Weather and Ultraviolet Light

Protect air barrier products from direct exposure to rain, snow, sunlight, mist, and other extreme weather conditions. Replace, at no additional cost to the Government, barrier products that have been exposed to ultraviolet (sun)light longer than allowed by manufacturer's written requirements.

PART 2 PRODUCTS

2.1 PRIMERS, ADHESIVES, AND MASTICS

Provide primers, adhesives, mastics and other accessory materials as recommended in writing by the manufacturer of the self-adhering air barrier for adequate bonding to each type of substrate. Adhesive must be butyl- or acrylic-based.

2.2 SHEET METAL FLASHING

Provide as specified in Section 07 60 00 FLASHING AND SHEET METAL.

2.3 JOINT SEALANTS

Provide as specified in Section 07 92 00 JOINT SEALANTS. Verify compatibility with adjacent products that are or will be in contact with one another.

PART 3 EXECUTION

3.1 EXAMINATION

Before installing air barrier, examine substrates, areas, and conditions under which air barrier assemblies will be applied, with Installer present, for compliance with requirements. Ensure the following conditions are met:

a. Surfaces are sound, dry, even, and free of oil, grease, dirt, excess mortar or other contaminants.

b. Concrete surfaces are cured and dry, smooth without large voids, spalled areas or sharp protrusions.

c. Verify substrate is visibly dry and free of moisture. Test for capillary moisture by plastic sheet method in accordance with ASTM D4263 and take suitable measures until substrate passes moisture test.

d. Verify sealants used in sheathing are compatible with membrane proposed for use. Perform field peel adhesion test on materials to which sealants are adhered.

3.2 PREPARATION

Clean, prepare, and treat substrate in accordance with manufacturer's written instructions. Ensure clean, dust-free, and dry substrate for air barrier application.

a. Prime masonry and concrete substrates with conditioning primer.

b. Prime gypsum sheathing an adequate number of coats to achieve required bond, with adequate drying time between coats.

c. Prime wood, metal, and painted substrates with primer.

d. Prepare, treat, and seal vertical and horizontal surfaces at terminations and penetrations through air barrier and at protrusions.

3.3 INSTALLATION

3.3.1 Installation of Self-adhering Air Barrier

Install materials in accordance with manufacturer's recommendations and the following:

a. Apply primer at rate recommended by manufacturer prior to membrane installation. Allow primer to dry completely before membrane application. Apply as many coats as necessary for proper adhesion.

b. When membrane is properly positioned, press into place and roll membrane with roller immediately after placement.

c. Apply membrane sheets to shed water naturally without interception by a sheet edge, unless that edge is sealed with permanently flexible termination mastic.

d. Position subsequent sheets of membrane applied above so that membrane

overlaps the membrane sheet below by a minimum of 2-1/2 inches, unless greater overlap is recommended by manufacturer. Roll into place with roller.

e. Make side laps a minimum of 2-1/2 inches and end laps a minimum of 5 inches, unless greater overlap is recommended by manufacturer. Roll seams with roller.

f. Roll membrane to adhere to substrate. Cover corners and joints with two layers of reinforcement by first applying a 12 inch width of membrane centered along the axis. Flash drains and projections with a second ply of membrane for a distance of 6 inches from the drain or projection.

g. Seal around all penetrations through the air barrier resulting from pipes, vents, conduit, electrical fixtures, structural members, or other construction passing through it. Seal with termination mastic, extruded silicone sealant, membrane counterflashing or other sealing methods in accordance with manufacturer's written recommendations.

h. Continuously connect the air barrier between walls, roof, floor and below grade assemblies to form a continuous integrated air barrier system around the entire building enclosure. Extend the air barrier membrane into rough openings such as doors, windows, louvers, and other exterior penetrations. Seal edges of barrier at junctures with rough openings.

i. At changes in substrate plane, provide transition material (e.g., bead of sealant, mastic, extruded silicone sealant, membrane counterflashing or other material recommended by manufacturer) under membrane to eliminate all sharp 90-degree inside corners and to make a smooth transition from one plane to another.

j. Provide mechanically fastened non-corrosive metal sheet to span gaps in substrate plane and to make a smooth transition from one plane to the other. Continuously support membrane with substrate.

k. At deflection and control joints, provide backup for the membrane to accommodate anticipated movement.

l. At expansion and seismic joints provide transition to the joint assemblies.

m. Apply a bead or trowel coat of mastic along membrane seams at reverse lapped seams, rough cuts, and as recommended by the manufacturer.

n. At end of each working day, seal top edge of membrane to substrate with termination mastic.

o. Do not allow materials to come in contact with chemically incompatible materials.

p. Counterflash upper edge of thru-wall flashing and air barrier. Counter flashing is specified in Section 07 60 00 FLASHING AND SHEET METAL. See applicable wall-type Sections for thru-wall flashing requirements.

3.4 FIELD QUALITY CONTROL

3.4.1 Site Inspections and Testing

Provide site inspections and testing in accordance with the manufacturer's instructions, Section 07 27 10 BUILDING AIR BARRIER SYSTEM and this section.

a. Conduct inspections and testing at 5, 50, and 95 percent completion of this scope of work. Forward written site inspections and testing reports to the Contracting Officer within five working days of the inspection and test being performed.

b. If inspections reveal defects, promptly remove and replace defective work at no additional expense to the Government.

3.5 FIELD PEEL ADHESION TEST

Conduct in accordance with test protocol indicated in Part 1, paragraph FIELD PEEL ADHESION TEST.

3.6 PROTECTION AND CLEANING

3.6.1 Protection

3.6.1.1 Adjacent Surfaces

Protect exposed adjacent surfaces that could be damaged by primers and adhesives associated with air barrier membrane. Provide protection during application and the remainder of construction in accordance with manufacturer's written instructions.

3.6.1.2 The Air Barrier Assembly

Protect finished portions of the air barrier assembly from damage during ongoing application and throughout the remainder of the construction period in accordance with manufacturer's written instructions. Coordinate timing of installation of materials that will cover the air barrier membrane to ensure the exposure period does not exceed that recommended by the air barrier manufacturer's written installation instructions. Remove and replace, at no additional cost to the Government, membrane products that exceed the manufacturer's allowed exposure limits.

3.6.2 Cleaning

Clean spillage and soiling from adjacent construction using cleaning agents and procedures recommended by manufacturer of affected construction and as acceptable to the primary material manufacturer.

-- End of Section --

P2# 519087 - DSSC DLA Repair Building 27
Columbus, OH

SECTION 07 27 26

FLUID-APPLIED MEMBRANE AIR BARRIERS
08/23

PART 1 GENERAL

1.1 REFERENCES

The publications listed below form a part of this specification to the extent referenced. The publications are referred to within the text by the basic designation only.

AIR BARRIER ASSOCIATION OF AMERICA (ABAA)

ABAA Accreditation	Accreditation
ABAA QAP	Quality Assurance Program

ASTM INTERNATIONAL (ASTM)

ASTM C1305/C1305M	(2016) Standard Test Method for Crack Bridging Ability of Liquid-Applied Waterproofing Membrane
ASTM D412	(2016; R 2021) Standard Test Methods for Vulcanized Rubber and Thermoplastic Elastomers - Tension
ASTM D4263	(1983; R 2018) Standard Test Method for Indicating Moisture in Concrete by the Plastic Sheet Method
ASTM D4541	(2022) Standard Test Method for Pull-Off Strength of Coatings Using Portable Adhesion Testers
ASTM D5590	(2017; R 2021) Standard Test Method for Determining the Resistance of Paint Films and Related Coatings to Fungal Defacement by Accelerated Four-Week Agar Plate Assay
ASTM E96/E96M	(2024a) Standard Test Methods for Gravimetric Determination of Water Vapor Transmission Rate of Materials
ASTM E283/E283M	(2019) Standard Test Method for Determining Rate of Air Leakage Through Exterior Windows, Skylights, Curtain Walls, and Doors Under Specified Pressure Differences Across the Specimen
ASTM E331	(2000; R 2023) Standard Test Method for Water Penetration of Exterior Windows, Skylights, Doors, and Curtain Walls by Uniform Static Air Pressure Difference
ASTM E2178	(2021a) Standard Test Method for

	Determining Air Leakage Rate and Calculation of Air Permeance of Building Materials
ASTM E2357	(2018) Standard Test Method for Determining Air Leakage Rate of Air Barrier Assemblies

NATIONAL FIRE PROTECTION ASSOCIATION (NFPA)

NFPA 285	(2023) Standard Fire Test Method for Evaluation of Fire Propagation Characteristics of Exterior Wall Assemblies Containing Combustible Components

1.2 RELATED REQUIREMENTS

Coordinate the requirements of Section 07 27 10 BUILDING AIR BARRIER SYSTEM and other building enclosure sections to provide a complete building air barrier system. Submit all materials, components and assemblies of the air barrier system together as one complete submittal package.

1.3 SUBMITTALS

Government approval is required for submittals with a "G" or "S" classification. Submittals not having a "G" or "S" classification are for information only. When used, a code following the "G" classification identifies the office that will review the submittal for the Government. Submit the following in accordance with Section 01 33 00 SUBMITTAL PROCEDURES:

SD-01 Preconstruction Submittals

Qualifications of Manufacturer;

Qualifications of Installer;

SD-02 Shop Drawings

Fluid-Applied Membrane Air Barrier Shop Drawings;

SD-03 Product Data

Fluid-Applied Membrane Air Barrier;

Transition Membrane;

Primers, Adhesives, and Mastics;

Reinforcement;

Safety Data Sheets;

SD-04 Samples

Fluid-Applied Membrane Air Barrier Mockup;

SD-06 Test Reports

Capillary Moisture Test;

Field Peel Adhesion Test;

Flame Propagation of Wall Assemblies;

Site Inspections Reports;

SD-08 Manufacturer's Instructions

Fluid-Applied Membrane Air Barrier Manufacturer's Printed Instructions;

Primers, Adhesives, and Mastics Printed Manufacturer's Instructions;

1.4 MISCELLANEOUS REQUIREMENTS

For fluid-applied membrane air barriers provide the following:

1.4.1 Shop Drawings

Submit fluid-applied membrane air barrier shop drawings showing locations and extent of barrier assemblies, transition membranes, details of all typical conditions, intersections with other envelope assemblies and materials, and membrane counterflashings. Show details for bridging of gaps in construction, treatment of inside and outside corners, expansion joints, methods of attachment of materials covering the self-adhered barrier without compromising the barrier. Indicate how miscellaneous penetrations such as conduit, pipes, electric boxes, brick ties, and similar items will be sealed.

1.4.2 Product Data

Submit manufacturer's technical data indicating compliance with performance and environmental requirements. Submit fluid-applied membrane air barrier manufacturer's printed instructions for evaluating, preparing, and treating substrates, temperature and other limitations of installation conditions, safety requirements for installation, and Safety Data Sheets. Also, submit primers, adhesives and mastics printed manufacturer's instructions for installation conditions and safety requirements. Indicate flame and smoke spread ratings for all products.

1.4.3 Mockup

Provide a mockup of the fluid-applied membrane air barrier. Apply product in an area designated by the Contracting Officer. Apply an area of not less than 54 square feet. Include all components specified as representative of the complete system. Notify the Contracting Officer a minimum of 48 hours prior to the test application. Select a test area representative of conditions to be covered including window or door openings, wall to ceiling transitions, flashings, and penetrations, as applicable.

1.4.4 Test Reports

Submit test reports indicating that capillary moisture tests and field peel adhesion tests on all substrate materials have been performed and the changes made, if required, in order to achieve successful and lasting

adhesion. Submit test reports for flame propagation of wall assemblies tested in accordance with NFPA 285.

1.5 DELIVERY, STORAGE, AND HANDLING

1.5.1 Delivery

Deliver and store materials in sufficient quantity to allow for uninterrupted flow of work. Inspect materials delivered to the site for damage and store out of weather. Deliver materials to the jobsite in their original unopened packages, clearly marked with the manufacturer's name, brand designation, description of contents, and shelf life of containerized materials. Store and handle to protect from damage.

1.5.2 Storage

Inspect materials delivered to the site for damage; unload and store out of weather in manufacturer's original packaging. Store only in dry locations, not subject to open flames or sparks, and easily accessible for inspection and handling. Protect stored materials from direct sunlight.

1.6 CAPILLARY MOISTURE TEST

Perform a capillary moisture test by plastic sheet method in accordance with ASTM D4263 on the construction mockup and substrate materials. Perform test after curing period as recommended by the air barrier manufacturer. Record mode of failure and area which failed in accordance with ASTM D4263. Once the air barrier material manufacturer has established a minimum adhesion or moisture level for the product on the particular substrate, indicate on the inspection report whether this requirement has been met. Where the manufacturer has not declared a minimum adhesion or moisture value for their product and substrate combination, the inspector must record actual values.

1.7 FIELD PEEL ADHESION TEST

Perform a field peel adhesion test on a construction mockup. Test the applied product for adhesion in accordance with manufacturer's recommendations. Perform test after curing period recommended by the manufacturer. Record mode of failure and area which failed in accordance with ASTM D4541. When the manufacturer has established a minimum adhesion level for the product on the particular substrate, the inspection report must indicate whether this requirement has been met. Where the manufacturer has not declared a minimum adhesion value for their product/substrate combination, the inspector must record actual values.

1.8 AIR BARRIER TESTING

Perform air barrier testing in accordance with Section 07 27 10 BUILDING AIR BARRIER SYSTEM.

1.9 QUALITY ASSURANCE

1.9.1 Qualifications of Manufacturer

Submit documentation verifying that manufacturer of fluid-applied membrane air barrier is currently accredited by the Air Barrier Association of America (ABAA Accreditation https://www.airbarrier.org/).

1.9.2 Qualifications of Installer

Submit documentation verifying that installers of the fluid-applied membrane air barrier are currently certified in accordance with the ABAA QAP Quality Assurance Program (https://www.airbarrier.org/qap/).

1.10 PRECONSTRUCTION MEETING

Conduct a preconstruction meeting a minimum of two weeks prior to commencing work specified in this specification Section. Agenda must include, at a minimum, construction and testing of construction mock-up, sequence of construction, coordination with substrate preparation, materials approved for use, compatibility of materials, coordination with installation of adjacent and covering materials, and details of construction. Attendance is required by representatives of related trades including covering materials, substrate materials, adjacent materials, and materials and components of the fluid-applied membrane air barrier.

1.11 ENVIRONMENTAL CONDITIONS

1.11.1 Temperature

Install fluid-applied membrane air barrier within the range of ambient and substrate temperatures as recommended in writing by the fluid-applied membrane air barrier manufacturer. Do not apply fluid-applied membrane air barrier to a damp or wet substrate. Do not apply during inclement weather or when ice, frost, surface moisture, or visible dampness is present on surfaces to be covered, or when precipitation is imminent.

1.11.2 Exposure to Weather

Protect fluid-applied membrane air barrier products from direct exposure to rain, snow, sunlight, mist, and other extreme weather conditions. Replace, at no additional cost to the Government, barrier products that have been exposed to ultraviolet (sun)light longer than allowed by manufacturer's written requirements.

PART 2 PRODUCTS

2.1 FLUID-APPLIED MEMBRANE AIR BARRIER

Provide a fluid-applied, vapor retarding, air barrier. This barrier must exhibit no visible water leakage when tested in accordance with ASTM E331 and must perform as a liquid water drainage plane with thru-wall flashing to discharge incidental condensation and water penetration to the exterior of the building enclosure. Provide products suitable for use within temperature ranges specified by manufacturer for the location of the project.

2.1.1 Physical Properties

a. Air Permeance (ASTM E2178): less than 0.004 CFM per sf at 1.57 psf.

b. Air Leakage (ASTM E2357, ASTM E283/E283M): Less than 0.04 CFM per sf at 1.57 psf at one inch.

c. Water Vapor Permeance (Vapor Impermeable Membrane) (ASTM E96/E96M, desiccant method A): 0.1 perms or less.

d. Pull Adhesion (ASTM D4541): Not less than 15 psi.

e. Elongation (ASTM D412): Not less than 300 percent.

f. Low temperature Flexibility and Crack Bridging (ASTM C1305/C1305M): Pass at minus 15 degrees F.

g. Solids by Volume: minimum 50 percent.

h. Flame propagation of wall assemblies (NFPA 285): Pass

i. Resistance to Mold, Mildew and Fungal Growth (ASTM D5590): 0, No growth.

2.2 PRIMERS, ADHESIVES, AND MASTICS

Provide primers, adhesives, mastics, sealants and other accessories as recommended by manufacturer of fluid-applied membrane air barrier for a complete installation.

2.3 TRANSITION MEMBRANE

Provide as specified in Section 07 27 19.01 SELF-ADHERING AIR BARRIERS.

2.4 SHEET METAL FLASHING

Provide as specified in Section 07 60 00 FLASHING AND SHEET METAL.

2.5 JOINT SEALANTS

Provide as specified in Section 07 92 00 JOINT SEALANTS.

2.6 REINFORCEMENT

Provide fiberglass mesh tape, or fluid-applied air barrier manufacturer's approved comparable equivalent product, reinforcement at seams, edges, projections and penetrations. Reinforce all joints exceeding 1/4 inch with fiberglass mesh.

PART 3 EXECUTION

3.1 EXAMINATION

Before installing fluid-applied membrane air barrier, examine substrates, areas, and conditions under which fluid-applied membrane air barrier assemblies will be applied, with installer present, for compliance with requirements. Ensure the following conditions are met:

a. Surfaces are sound, dry, even, and free of oil, grease, dirt, excess mortar or other contaminants detrimental to the adhesion of the membranes.

b. Concrete and masonry surfaces are cured and dry, smooth without large voids, spalled areas or sharp protrusions. Do not proceed with installation until after minimum concrete curing period recommended by fluid-applied membrane air barrier manufacturer.

c. Fill voids, gaps and spalled areas in substrate to provide an even plane. Strike masonry joints full flush.

d. Verify substrate is visibly dry and free of moisture. Test for capillary moisture by plastic sheet method in accordance with ASTM D4263 and take suitable measures until substrate passes moisture test.

e. Verify sealants used in substrates, and in joints between substrates, are compatible with fluid-applied membrane air barrier.

3.2 PREPARATION

Clean, prepare, and treat substrate in accordance with manufacturer's written instructions. Ensure clean, dust-free, and dry substrate for fluid-applied membrane air barrier application.

a. Remove dust, dirt and other contaminants from joints and cracks before coating surfaces.

b. Prepare, treat, and seal vertical and horizontal surfaces at terminations and penetrations through fluid-applied membrane air barrier.

c. At changes in substrate plane, provide transition material (bead of sealant, mastic, extruded silicone sealant, membrane counterflashing or other material recommended by manufacturer) under transition membrane to eliminate all sharp 90-degree inside corners and to make a smooth transition from one plane to another.

d. Provide mechanically fastened non-corrosive metal sheet to span gaps in substrate plane and to make a smooth transition from one plane to the other. Continuously support membrane with substrate.

e. For exterior sheathing substrates, ensure that exterior sheathing is stabilized, with corners and edges fastened with appropriate screws. Treat all joints in accordance with the air barrier manufacturer's instructions prior to application of air barrier material. Allow sufficient time for joint treatments to fully cure before application of transition membranes and fluid-applied membrane air barrier.

f. For concrete and masonry substrates, fill all voids and holes, particularly in mortar joints, with non-shrinking grout.

g. Mask off and cover adjacent surfaces to protect from spillage and overspray.

3.3 INSTALLATION

3.3.1 Installation of Transition Membrane

Install transition membrane materials in accordance with the details on the drawings, Section 07 27 19.01 SELF-ADHERING AIR BARRIERS, and the following:

a. Install transition membrane at all required locations (such as at any voids, gaps, or interstitial spaces that the fluid-applied air barrier cannot adequately protect) prior to installation of the fluid-applied membrane air barrier.

b. Verify transition membrane is fully adhered to substrate and that its

surface is clean, dry and wrinkle free prior to installation of the fluid-applied membrane air barrier.

c. Verify transition membrane completely covers all transition areas and provides continuity of the finished fluid-applied membrane air barrier without gaps or cracks.

3.3.2 Installation of Flashing

Counterflash upper edge of thru-wall flashing and fluid-applied air barrier. Counter flashing is specified in Section 07 60 00 FLASHING AND SHEET METAL. See applicable wall-type Sections for thru-wall flashing requirements.

3.3.3 Installation of Fluid-Applied Membrane Air Barrier

Install materials in accordance with manufacturer's recommendations and the following:

a. Apply fluid-applied membrane air barrier in single or dual coat application by spray or roller. Apply fluid-applied membrane air barrier within manufacturer's recommended temperature range for application.

b. Apply fluid-applied membrane air barrier in manner and at rate and wet film thickness recommended by manufacturer to yield a finished dry film thickness of not less than 60 mils or as otherwise required by the manufacturer for the application substrate material and surface roughness.

c. Apply fluid-applied membrane air barrier around all penetrations ensuring a complete and continuous air barrier. Lap fluid-applied membrane air barrier a minimum of 3 inch over transition membrane to seal leading edge.

d. Seal membrane terminations, heads of mechanical fasteners, masonry tie fasteners, around penetrations, HVAC assemblies, plumbing and electrical assemblies, doors, windows, louvers, and other assemblies penetrating the fluid-applied membrane air barrier with a termination sealant recommended by the fluid-applied membrane air barrier manufacturer.

e. Notify the Contracting Officer and Testing Agency upon completion of fluid-applied membrane air barrier installation. Air barrier materials and assemblies must remain exposed until tested and inspected in accordance with the ABAA protocol.

f. Do not allow materials to come in contact with chemically incompatible materials.

3.3.4 Installation of Reinforcement

Install reinforcement at projections, corners, joints, and penetrations where applicable.

3.4 FIELD QUALITY CONTROL

3.4.1 Site Inspections and Testing

Provide site inspections and testing in accordance with the manufacturer's instructions, Section 07 27 10 BUILDING AIR BARRIER SYSTEM and this Section.

a. Conduct inspections and testing at 5, 50, and 95 percent completion of this scope of work. Forward written inspection reports to the Contracting Officer within five working days of the inspection and test being performed.

b. If the inspections reveal defects, promptly remove and replace defective work at no additional expense to the Government.

3.5 PROTECTION AND CLEANING

3.5.1 Protection

Protect fluid-applied membrane air barrier assemblies from damage during application and remainder of construction in accordance with manufacturer's written instructions.

Coordinate installation, testing, and inspection procedures to ensure exposure period does not exceed that recommended by the product manufacturer. Remove and replace, at no additional cost to the government, membrane products that exceed manufacturer's allowed exposure limits.

3.5.2 Cleaning of Adjacent Surfaces

Clean excess product from adjacent construction using cleaning agents and procedures as recommended in writing by the manufacturer of each type of affected construction and as acceptable to same.

3.6 CLEANUP OF SPILLS

Conduct cleanup of uncured product spillage in accordance with manufacturer's written safe handling instructions.

-- End of Section --

P2# 519087 - DSSC DLA Repair Building 27
Columbus, OH

SECTION 07 60 00

FLASHING AND SHEET METAL
08/23

PART 1 GENERAL

1.1 REFERENCES

The publications listed below form a part of this specification to the extent referenced. The publications are referred to within the text by the basic designation only.

AMERICAN SOCIETY OF HEATING, REFRIGERATING AND AIR-CONDITIONING ENGINEERS (ASHRAE)

ASHRAE 90.1 - IP	(2019) Energy Standard for Buildings Except Low-Rise Residential Buildings

AMERICAN WELDING SOCIETY (AWS)

AWS D1.2/D1.2M	(2014; Errata 1 2014; Errata 2 2020) Structural Welding Code - Aluminum

ASTM INTERNATIONAL (ASTM)

ASTM A308/A308M	(2010) Standard Specification for Steel Sheet, Terne (Lead-Tin Alloy) Coated by the Hot Dip Process
ASTM A480/A480M	(2024) Standard Specification for General Requirements for Flat-Rolled Stainless and Heat-Resisting Steel Plate, Sheet, and Strip
ASTM A653/A653M	(2023) Standard Specification for Steel Sheet, Zinc-Coated (Galvanized) or Zinc-Iron Alloy-Coated (Galvannealed) by the Hot-Dip Process
ASTM A792/A792M	(2022) Standard Specification for Steel Sheet, 55% Aluminum-Zinc Alloy-Coated by the Hot-Dip Process
ASTM B32	(2020) Standard Specification for Solder Metal
ASTM B69	(2021) Standard Specification for Rolled Zinc
ASTM B101	(2022) Standard Specification for Lead-Coated Copper Sheet and Strip for Building Construction
ASTM B209/B209M	(2021a) Standard Specification for Aluminum and Aluminum-Alloy Sheet and Plate
ASTM B221	(2021) Standard Specification for Aluminum

	and Aluminum-Alloy Extruded Bars, Rods, Wire, Profiles, and Tubes
ASTM B370	(2022) Standard Specification for Copper Sheet and Strip for Building Construction
ASTM D41/D41M	(2011; R 2016) Standard Specification for Asphalt Primer Used in Roofing, Dampproofing, and Waterproofing
ASTM D226/D226M	(2017) Standard Specification for Asphalt-Saturated Organic Felt Used in Roofing and Waterproofing
ASTM D1784	(2020) Standard Specification for Rigid Poly(Vinyl Chloride) (PVC) Compounds and Chlorinated Poly(Vinyl Chloride) (CPVC) Compounds
ASTM D2244	(2021) Standard Practice for Calculation of Color Tolerances and Color Differences from Instrumentally Measured Color Coordinates
ASTM D4214	(2007; R 2015) Standard Test Method for Evaluating the Degree of Chalking of Exterior Paint Films
ASTM D4586/D4586M	(2007; R 2018) Asphalt Roof Cement, Asbestos-Free
ASTM E1980	(2011; R 2019) Standard Practice for Calculating Solar Reflectance Index of Horizontal and Low-Sloped Opaque Surfaces
ASTM E2112	(2023) Standard Practice for Installation of Exterior Windows, Doors and Skylights

COOL ROOF RATING COUNCIL (CRRC)

ANSI/CRRC S100	(2016) Standard Test Methods for Determining Radiative Properties of Materials

NATIONAL ROOFING CONTRACTORS ASSOCIATION (NRCA)

NRCA 0429	(2022) The NRCA Roofing Manual: Architectural Metal Flashing, Condensation and Air Leakage Control and Reroofing

SHEET METAL AND AIR CONDITIONING CONTRACTORS' NATIONAL ASSOCIATION (SMACNA)

SMACNA 1793	(2012) Architectural Sheet Metal Manual, 7th Edition

SINGLE PLY ROOFING INDUSTRY (SPRI)

ANSI/SPRI RD-1	(2019) Performance Standard for Retrofit

Drains

1.2 GENERAL REQUIREMENTS

Finished sheet metal assemblies must form a weathertight enclosure without waves, warps, buckles, fastening stresses or distortion, while allowing for expansion and contraction without damage to the system. The sheet metal installer is responsible for cutting, fitting, drilling, and other operations in connection with sheet metal modifications required to accommodate the work of other trades. Coordinate installation of sheet metal items used in conjunction with roofing with roofing work to permit continuous, uninterrupted roofing operations.

1.2.1 General Material Requirements

All materials specified in this Section installed in conjunction with the roofing system must be provided by the roofing system manufacturer, or by a manufacturer approved by the roofing system manufacturer for use in the roofing system, and must form a part of the Warranty as required by the applicable roofing system Section.

1.3 SUBMITTALS

Government approval is required for submittals with a "G" or "S" classification. Submittals not having a "G" or "S" classification are for information only. When used, a code following the "G" classification identifies the office that will review the submittal for the Government. Submit the following in accordance with Section 01 33 00 SUBMITTAL PROCEDURES:

SD-02 Shop Drawings

Exposed Sheet Metal Coverings;

Gutters;

Downspouts;

Expansion Joints;

Gravel Stops and fascia;

Splash Pans;

Flashing for Roof Drains;

Base Flashing;

Counterflashing;

Flashing at Roof Penetrations and Equipment Supports;

Reglets;

Scuppers;

Copings;

Drip Edges;

Conductor Heads;

Open Valley Flashing;

Eave Flashing;

Recycled Content; S

SD-03 Product Data

Cool Roof Data;

SD-04 Samples

Finish Samples;

SD-07 Certificates

Warranty on Finishes;

SD-08 Manufacturer's Instructions

Instructions for Installation; SD-10 Operation and Maintenance Data

Cleaning and Maintenance;

1.4 MISCELLANEOUS REQUIREMENTS

1.4.1 Product Data

Indicate thicknesses, dimensions, fastenings, anchoring methods, expansion joints, and other provisions necessary for thermal expansion and contraction. Scaled manufacturer's catalog data may be submitted for factory fabricated items.

1.4.2 Finish Samples

Submit two color charts and two finish sample chips from manufacturer's standard color and finish options for each type of finish indicated.

1.4.3 Operation and Maintenance Data

Submit detailed instructions for installation and quality control during installation, cleaning and maintenance, for each type of assembly indicated.

1.5 DELIVERY, HANDLING, AND STORAGE

Package and protect materials during shipment. Uncrate and inspect materials for damage, dampness, and wet-storage stains upon delivery to the job site. Remove from the site and replace damaged materials that cannot be restored to like-new condition. Handle sheet metal items to avoid damage to surfaces, edges, and ends. Store materials in dry, weather-tight, ventilated areas until installation.

PART 2 PRODUCTS

2.1 RECYCLED CONTENT

Provide products with recycled content. Provide data for each product with recycled content, identifying percentage of recycled content.

2.2 MATERIALS

Use any metal listed by NRCA 0429 or SMACNA 1793 for a particular item, unless otherwise indicated. Provide materials and configurations in accordance with NRCA 0429 or SMACNA 1793 for each material, while also meeting the minimum thickness requirements specified in this Section. Different items need not be of the same metal, except that contact between dissimilar metals must be avoided.

Provide sheet metal items in 8 to 10 foot lengths. Single pieces less than 8 feet long may be used to connect to factory-fabricated inside and outside corners, and at ends of runs. Factory fabricate corner pieces with minimum 12 inch legs. Provide accessories and other items essential to complete the sheet metal installation. Provide accessories made of the same or compatible materials as the items to which they are applied. Fabricate sheet metal items of the materials specified below and to the gage, thickness, or weight shown in Table I at the end of this section. Provide sheet metal items with mill finish unless specified otherwise. Where more than one material is listed for a particular item in Table I, each is acceptable and may be used, except as follows:

2.2.1 Exposed Sheet Metal Items

Provide exposed sheet metal items of the same material. Consider the following as exposed sheet metal: gutters, including hangers; downspouts; gravel stops and fascia; cap, valley, steeped, base, and eave flashings and related accessories.

2.2.2 Drainage

Do not use copper for an exposed item if drainage from that item will pass over exposed masonry, stonework or other metal surfaces. In addition to the metals listed in Table I, lead-coated copper may be used for such items.

2.2.3 Copper, Sheet and Strip

Provide in accordance with ASTM B370, cold-rolled temper, H 00 (standard).

2.2.4 Lead-Coated Copper Sheet

Provide in accordance with ASTM B101.

2.2.5 Lead Sheet

Provide in a minimum weight of 4 pounds per square foot.

2.2.6 Steel Sheet, Zinc-Coated (Galvanized)

Provide in accordance with ASTM A653/A653M, a minimum of 24 gauge, and a minimum zinc coat weighting of 90 ounces per square feet.

2.2.7 Zinc Sheet and Strip

Provide in accordance with ASTM B69, Type I, a minimum of 0.024 inch thick.

2.2.8 Steel Sheet, Aluminum Zinc-Coated

Provide in accordance with ASTM A792/A792M, a minimum of 24 gauge.

2.2.9 Stainless Steel

Provide in accordance with ASTM A480/A480M, Type 302 or 304, 2D Finish, fully annealed, dead-soft temper, a minimum of 24 gauge.

2.2.10 Terne-Coated Steel

Provide in accordance with ASTM A308/A308M, a minimum of 14 by 20 inch with minimum of 40 pound coating per double base box. ASTM A308/A308M.

2.2.11 Aluminum Alloy Sheet and Plate

Provide in accordance with ASTM B209/B209M anodized color to match existing form alloy, and temper appropriate for use. Provide material not less than 0.065-in in thickness.

2.2.12 Finishes

Provide exposed exterior sheet metal and aluminum with a baked on, factory applied coil fluoropolymer color coating or approved equal siliconized polyester coating. Dry film thickness of coatings must be 0.8 to 1.3 mils. Color to be selected from as indicated on the Drawings. Field applications of color coatings are prohibited and will be rejected.

2.2.12.1 Warranty on Finishes

Provide a manufacturer's warranty to repair, or replace, sheet metal flashing and trim that shows evidence of deterioration of factory-applied finishes within 20 years from date of project substantial completion. Deterioration includes the following:

a. Color fading more than 5 Delta E units when tested in accordance with ASTM D2244.

b. Chalking in excess of a No. 8 rating when tested in accordance with ASTM D4214.

c. Cracking, checking, peeling, or failure of paint to adhere to bare metal.

2.2.13 Cool Roof Finishes

Provide roof finishes having a minimum 3-year aged solar reflectance of 0.55, and a minimum 3-year aged thermal emittance of 0.75 when tested in accordance with ANSI/CRRC S100, or, a minimum 3-year aged Solar Reflectance Index of 64 when determined in accordance with the Solar Reflectance Index method in ASTM E1980 using a convection coefficient of 2.1 BTU per h ft2, to comply with ASHRAE 90.1 - IP.

2.2.14 Aluminum Alloy, Extruded Bars, Rods, Shapes, and Tubes

ASTM B221.

2.2.15 Solder

Provide in accordance with ASTM B32, 95-5 tin-antimony.

2.2.16 Reglets

2.2.16.1 Polyvinyl Chloride Reglets

Provide in accordance with ASTM D1784, Type II, Grade 1, Class 14333-D, 0.075 inch minimum thickness.

2.2.16.2 Metal Reglets

Provide factory fabricated caulked type or friction type reglets with a minimum opening of 1/4 inch and a depth of 1-1/4 inch, as approved.

2.2.16.2.1 Caulked Reglets

Provide with rounded edges, temporary reinforcing cores, and accessories as required for securing to adjacent construction. Provide built-up mitered corner pieces for inside and outside corners.

2.2.16.2.2 Friction Reglets

Provide with flashing receiving slots not less than 5/8 inch deep, one inch jointing tongues, and upper and lower anchoring flanges installed at 24 inch maximum snap-lock type receiver.

2.2.17 Scuppers

Line interiors of scupper openings with sheet metal. Provide a drip edge at bottom edges with returns of not less than one inch against the face of the outside wall at the top and sides. Provide the perimeter of the lining approximately 1/2 inch less than the perimeter of the scupper.

2.2.18 Conductor Heads

Provide conductor heads and screens in the same material as downspouts. Provide outlet tubes not less than 4 inches long.

2.2.19 Splash Pans

Provide splash pans where downspouts discharge onto roof surfaces and at locations indicated. Unless otherwise indicated, provide pans not less than 24 inches long by 18 inches wide with metal ribs across bottoms of pans. Provide sides of pans with vertical baffles not less than one inch high in the front, and 4 inches high in the back.

2.2.20 Copings

Unless otherwise indicated, provide copings in copper sheets, 8 or 10 feet long, joined by a 3/4 inch locked and soldered seam.

2.2.21 Bituminous Plastic Cement

Provide in accordance with ASTM D4586/D4586M, Type I.

2.2.22 Roofing Felt

Provide in accordance with ASTM D226/D226M Type II.

2.2.23 Asphalt Primer

Provide in accordance with ASTM D41/D41M.

2.2.24 Fasteners

Use the same metal as, or a metal compatible with the item fastened. Confirm compatibility of fasteners and items to be fastened to avoid galvanic corrosion due to dissimilar materials.

PART 3 EXECUTION

3.1 INSTALLATION

3.1.1 Workmanship

Make lines and angles sharp and true. Free exposed surfaces from visible wave, warp, buckle, and tool marks. Fold back exposed edges neatly to form a 1/2 inch hem on the concealed side. Make sheet metal exposed to the weather watertight with provisions for expansion and contraction.

Make surfaces to receive sheet metal plumb and true, clean, even, smooth, dry, and free of defects and projections. For installation of items not shown in detail or not covered by specifications conform to the applicable requirements of SMACNA 1793, Architectural Sheet Metal Manual. Provide sheet metal flashing in the angles formed where roof decks abut walls, curbs, ventilators, pipes, or other vertical surfaces and wherever indicated and necessary to make the work watertight. Join sheet metal items together as shown in Table II.

3.1.2 Nailing

Confine nailing of sheet metal generally to sheet metal having a maximum width of 18 inches. Confine nailing of flashing to one edge only. Space nails evenly not over 3 inch on center and approximately 1/2 inch from edge unless otherwise specified or indicated. Face nailing is not permitted. Where sheet metal is applied to other than wood surfaces, include in shop drawings, the locations for sleepers and nailing strips required to secure the work.

3.1.3 Cleats

Provide cleats for sheet metal 18 inches and over in width. Space cleats evenly not over 12 inches on center unless otherwise specified or indicated. Unless otherwise specified, provide cleats of 2 inches wide by 3 inches long and of the same material and thickness as the sheet metal being installed. Secure one end of the cleat with two nails and the cleat folded back over the nailheads. Lock the other end into the seam. Where the fastening is to be made to concrete or masonry, use screws and drive in expansion shields set in concrete or masonry. Pre-tin cleats for soldered seams.

3.1.4 Bolts, Rivets, and Screws

Install bolts, rivets, and screws where indicated or required. Provide compatible washers where required to protect surface of sheet metal and to provide a watertight connection. Provide mechanically formed joints in aluminum sheets 0.040 inches or less in thickness.

3.1.5 Seams

Straight and uniform in width and height with no solder showing on the face.

3.1.5.1 Flat-lock Seams

Finish not less than 3/4 inch wide.

3.1.5.2 Lap Seams

Finish soldered seams not less than one inch wide. Overlap seams not soldered, not less than 3 inches.

3.1.5.3 Loose-Lock Expansion Seams

Not less than 3 inches wide; provide minimum one inch movement within the joint. Completely fill the joints with the specified sealant, applied at not less than 1/8 inch thick bed.

3.1.5.4 Standing Seams

Not less than one inch high, double locked without solder.

3.1.5.5 Flat Seams

Make seams in the direction of the flow.

3.1.6 Soldering

Where soldering is specified, apply to copper, terne-coated stainless steel, zinc-coated steel, and stainless steel items. Pre-tin edges of sheet metal before soldering is begun. Seal the joints in aluminum sheets of 0.040 inch or less in thickness with specified sealants. Do not solder aluminum.

3.1.6.1 Edges

Scrape or wire-brush the edges of lead-coated material to be soldered to produce a bright surface. Flux brush the seams in before soldering. Treat with soldering acid flux the edges of stainless steel to be pre-tinned. Seal the joints in aluminum sheets of 0.040 inch or less in thickness with specified sealants. Do not solder aluminum.

3.1.7 Welding and Mechanical Fastening

Use welding for aluminum of thickness greater than 0.040 inch. Aluminum 0.040 inch or less in thickness must be butted and the space backed with formed flashing plate; or lock joined, mechanically fastened, and filled with sealant as recommended by the aluminum manufacturer.

3.1.7.1 Welding of Aluminum

Use welding of the inert gas, shield-arc type. For procedures, appearance and quality of welds, and the methods used in correcting welding work, conform to AWS D1.2/D1.2M.

3.1.7.2 Mechanical Fastening of Aluminum

Use No. 12, aluminum alloy, sheet metal screws or other suitable aluminum alloy or stainless steel fasteners. Drive fasteners in holes made with a No. 26 drill in securing side laps, end laps, and flashings. Space fasteners 12 inches maximum on center. Where end lap fasteners are required to improve closure, locate the end lap fasteners not more than 2 inches from the end of the overlapping sheet.

3.1.8 Protection from Contact with Dissimilar Materials

3.1.8.1 Copper or Copper-bearing Alloys

Paint with heavy-bodied bituminous paint surfaces in contact with dissimilar metal, or separate the surfaces by means of moistureproof building felts.

3.1.8.2 Aluminum

Do not allow aluminum surfaces in direct contact with other metals except stainless steel, zinc, or zinc coating. Where aluminum contacts another metal, paint the dissimilar metal with a primer followed by two coats of aluminum paint. Where drainage from a dissimilar metal passes over aluminum, paint the dissimilar metal with a non-lead pigmented paint.

3.1.8.3 Metal Surfaces

Paint surfaces in contact with mortar, concrete, or other masonry materials with alkali-resistant coatings such as heavy-bodied bituminous paint.

3.1.8.4 Wood or Other Absorptive Materials

Paint surfaces that may become repeatedly wet and in contact with metal with two coats of aluminum paint or a coat of heavy-bodied bituminous paint.

3.1.9 Expansion and Contraction

Provide expansion and contraction joints at not more than 32 foot intervals for aluminum and at not more than 40 foot intervals for other metals. Provide an additional joint where the distance between the last expansion joint and the end of the continuous run is more than half the required interval. Space joints evenly. Join extruded aluminum gravel stops and fascia by expansion and contraction joints spaced not more than 12 feet apart.

3.1.10 Base Flashing

Extend up vertical surfaces of the flashing not less than 8 inches and not less than 4 inches under the roof covering. Where finish wall coverings form a counterflashing, extend the vertical leg of the flashing up behind the applied wall covering not less than 6 inches. Overlap the flashing

strips with the previously laid flashing not less than 3 inches. Fasten the strips at their upper edge to the deck. Horizontal flashing at vertical surfaces must extend vertically above the roof surface and fastened at their upper edge to the deck a minimum of 6 inches on center with a minimum of 2 inch lap of any surface. Solder end laps and provide for expansion and contraction. Extend the metal flashing over crickets at the up-slope side of vertical surfaces extending through sloping roofs, the metal flashings. Extend the metal flashings onto the roof covering not less than 4.5 inches at the lower side of vertical surfaces extending through the roof decks. Install and fit the flashings so as to be completely weathertight. Provide factory-fabricated base flashing for interior and exterior corners. Do not use metal base flashing on built-up roofing.

3.1.11 Counterflashing

Except where indicated or specified otherwise, insert counterflashing in reglets located from 9 to 10 inches above roof decks, extend down vertical surfaces over upturned vertical leg of base flashings not less than 3 inches. Fold the exposed edges of counterflashings 1/2 inch. Where stepped counterflashings are required, they may be installed in short lengths a minimum 8 inches by 8 inches or may be of the preformed single piece type. Provide end laps in counterflashings not less than 3 inches and make it weathertight with plastic cement. Do not make lengths of metal counterflashings exceed 10 feet. Form flashings to the required shapes before installation. Factory form corners not less than 12 inches from the angle. Secure the flashings in the reglets with lead wedges and space not more than 18 inches apart; on short runs, place wedges closer together. Fill caulked-type reglets or raked joints which receive counterflashing with caulking compound. Turn up the concealed edge of counterflashings built into masonry or concrete walls not less than 1/4 inch and extend not less than 2 inches into the walls. Install counterflashing to provide a spring action against base flashing.

3.1.12 Metal Reglets

Keep temporary cores in place during installation. Ensure factory fabricated caulked type or friction type, reglets have a minimum opening of 1/4 inch and a minimum depth of 1-1/4 inch, when installed.

3.1.12.1 Caulked Reglets

Wedge flashing in reglets with lead wedges every 18 inches, caulked full and solid with an approved compound.

3.1.12.2 Friction Reglets

Install flashing snap lock receivers at 24 inches on center maximum. When flashing has been inserted the full depth of the slot, caulk the slot, lock, and fill with sealant.

3.1.13 Polyvinyl Chloride Reglets for Temporary Construction

Rigid polyvinyl chloride reglets may be provided in lieu of metal reglets for temporary construction.

3.1.14 Gutters

The hung type of shape indicated and supported on underside by brackets

that permit free thermal movement of the gutter. Provide gutters in sizes indicated complete with mitered corners, end caps, outlets, brackets, and other accessories necessary for installation. Bead with hemmed edge or reinforce the outer edge of gutter with a stiffening bar not less than 3/4 by 3/16 inch of material compatible with gutter. Fabricate gutters in sections not less than 8 feet. Lap the sections a minimum of one inch in the direction of flow or provide with concealed splice plate 6 inches minimum. Join the gutters, other than aluminum, by riveted and soldered joints. Join aluminum gutters with riveted sealed joints. Provide expansion-type slip joints midway between outlets. Install gutters below slope line of the roof so that snow and ice can slide clear. Support gutters on as indicated. Adjust gutters to slope uniformly to outlets, with high points occurring midway between outlets. Fabricate hangers and fastenings from compatible metals.

3.1.15 Downspouts

Space supports for downspouts according to the manufacturer's recommendation for the masonry or steel substrate. Types, shapes and sizes are indicated. Provide complete including elbows and offsets. Provide downspouts in approximately 10 foot lengths. Provide end joints to telescope not less than 1/2 inch and lock longitudinal joints. Provide gutter outlets with wire ball strainers for each outlet. Provide strainers to fit tightly into outlets and be of the same material used for gutters. Keep downspouts not less than one inch away from walls. Fasten to the walls at top, bottom, and at an intermediate point not to exceed 5 feet on center with leader straps or concealed rack-and-pin type fasteners. Form straps and fasteners of metal compatible with the downspouts.

3.1.15.1 Terminations

Neatly fit into the drainage connection the downspouts terminating in drainage lines and fill the joints with a portland cement mortar cap sloped away from the downspout. Provide downspouts terminating in splash blocks with elbow-type fittings. Provide splash pans as specified.

3.1.16 Flashing for Roof Drains

Provide a 30 inches square sheet indicated. Taper insulation to drain from 24 inches out. Set flashing on finished felts in a full bed of asphalt roof cement, ASTM D4586/D4586M. Heavily coat the drain flashing ring with asphalt roof cement. Clamp the roof membrane, flashing sheet, and stripping felt in the drain clamping ring. Secure clamps so that felts and drain flashing are free of wrinkles and folds. Retrofit roof drains must conform to ANSI/SPRI RD-1.

3.1.17 Scuppers

Extend the scupper liner through and project outside of, the wall it penetrates to form a bottom drip edge against the face of the wall. Fold outside edges under 1/2 inch on all sides. Join the top and sides of the lining on the roof deck side to a closure flange by a locked and soldered joint. Join the bottom edge by a locked and soldered joint to the closure flange, where required, form with a ridge to act as a gravel stop around the scupper inlet. Provide surfaces to receive the scupper lining and coat with bituminous plastic cement.

3.1.18 Conductor Heads

Set the depth of the top opening equal to two-thirds of the width or the conductor head. Flat-lock solder seams. Where conductor heads are used in conjunction with scuppers, set the conductor a minimum of 2 inches wider than the scupper. Attach conductor heads to the wall with masonry fasteners. Securely fasten screens to heads.

3.1.19 Splash Pans

Install splash pans lapped with horizontal roof flanges not less than 4 inches wide to form a continuous surface. Bend the rear flange of the pan to contour of can't strip and extend up 6 inches under the side wall covering or to height of base flashing under counterflashing. Bed the pans and roof flanges in plastic bituminous cement and strip-flash as specified.

3.1.20 Flashing at Wall Openings

Install pan flashing in the rough opening sill at all penetrations in the exterior wall assemblies, such as windows, louvers, storefronts and curtain walls. Pan sill flashing must have end dams at both jambs a minimum of 2 in high and a rear dam of 2 in high. Flashing must comply with ASTM E2112 and SMACNA 1793.

3.1.21 Sheet Metal Covering on Flat, Sloped, or Curved Surfaces

Except as specified or indicated otherwise, cover and flash all minor flat, sloped, or curved surfaces such as crickets, bulkheads, dormers and small decks with metal sheets of the material used for flashing; maximum size of sheets, 16 by 18 inches. Fasten sheets to sheathing with metal cleats. Lock seams and solder. Lock aluminum seams as recommended by aluminum manufacturer. Provide an underlayment of roofing felt for all sheet metal covering.

3.1.22 Expansion Joints

Provide expansion joints for roofs, walls, and floors as indicated. Provide expansion joints in continuous sheet metal at 40 foot intervals for copper and stainless steel and at 32 foot intervals for aluminum, aluminum gravel stops and fascia which must have expansion joints at not more than 12 foot spacing. Provide evenly spaced joints. Provide an additional joint where the distance between the last expansion joint and the end of the continuous run is more than half the required interval spacing. Conform to the requirements of Table I.

3.1.22.1 Floor and Wall Expansion Joints

Provide U-shape with extended flanges for expansion joints in concrete and masonry walls and in floor slabs.

3.1.23 Through Wall Flashing

Provide through wall flashing as required in the applicable wall system Sections.

3.2 PAINTING

Touch ups in the field may be applied only after metal substrates have

been cleaned and pretreated in accordance with manufacturer's written instructions and products.

Field-paint dissimilar sheet metals in contact to separate and deter galvanic interactions.

3.2.1 Aluminum Surfaces

Clean with solvent and apply one coat of zinc-molybdate primer and one coat of aluminum paint.

3.3 CLEANING

Clean exposed sheet metal work at completion of installation. Remove grease and oil films, handling marks, contamination from steel wool, fittings and drilling debris, and scrub-clean. Free the exposed metal surfaces of dents, creases, waves, scratch marks, and solder or weld marks.

3.4 REPAIRS TO FINISH

Scratches, abrasions, and minor surface defects of finish may be repaired in accordance with the manufacturer's printed instructions and as approved. Repair damaged surfaces caused by scratches, blemishes, and variations of color and surface texture. Replace items which cannot be repaired.

3.5 FIELD QUALITY CONTROL

Establish and maintain a Quality Control Plan for sheet metal used in conjunction with roofing to assure compliance of the installed sheet metalwork with the Contract requirements. Remove work that is not in compliance with the Contract and replace or correct. Include quality control, but not be limited to, the following:

a. Observation of environmental conditions; number and skill level of sheet metal workers; condition of substrate.

b. Verification that specified material is provided and installed.

c. Inspection of sheet metalwork, for proper size(s) and thickness(es), fastening and joining, and proper installation.

3.5.1 Procedure

Submit for approval prior to start of roofing work. Include a checklist of points to be observed. Document the actual quality control observations and inspections. Provide a copy of the documentation to the Contracting Officer at the end of each day.

TABLE I. SHEET METAL WEIGHTS, THICKNESSES, AND GAGES					
Sheet Metal Items		Aluminum, inch			Zinc-Coated Steel, U.S. Std. Gage
	16	.032	.015	.015	24
	16	-	.015	.015	-
	20	.040	.018	.018	-
Downspouts and leaders	16	.032	.015	.015	24
Downspout clips and anchors	-	.040 clip .125 anchor	-	-	-
Downspout straps, 2-inch	48 (a)	.060	.050	-	-
Conductor heads	16	.032	.015	.015	-
Scupper lining	20	.032	.015	.015	-
Strainers, wire diameter or gage	No. 9 gage	.144 diameter	.109 diameter	-	
Flashings:					
	20	.040	.018	.018	24
Cap (Counter-flashing)	16	.032	.015	.015	26
	16	-	.015	.015	24
	10	-	.010	.010	-
	16	-	.015	.015	-
	16	.032	.015	.015	-
	16	.032	.015	.015	-
	16 (b)				
Pipe vent sleave (d)					
	16	-	-	-	-

TABLE I. SHEET METAL WEIGHTS, THICKNESSES, AND GAGES					
Sheet Metal Items		Aluminum, inch			Zinc-Coated Steel, U.S. Std. Gage
	-	.075	-	-	-
	16	.032	.015	.015	-
	20	.050	.018	.018	24
	24	.050	.025	-	-
Gutters:					
Gutter section	16	.032	.015	.015	24
Continuous cleat	16	.032	.015	.015	24
Hangers, dimensions	1 inch by 1/8 inch (a)	1 inch by .(inch (c)	1 inch by .0 inch	-	-
	16	.032	.015	.015	24
	10	-	.010	.010	-
	16	.040	.018	.018	-
(a) Brass.					
(b) May be lead weighing 4 pounds per square foot.					
(c) May be polyvinyl chloride.					
(d) 2.5 pound minimum lead sleeve with 4 inch flange. Where lead sleeve is impractical, refer to paragraph SINGLE PIPE VENTS for optional material.					

TABLE II. SHEET METAL JOINTS			
	TYPE OF JOINT		
Item Designation	Copper, Terne-Coated Stainless Steel, Zinc-Coated Steel and Stainless Steel	Aluminum	Remarks
Joint cap for building expansion seam, cleated joint at roof	1.25 inch single lock, standing seam, cleated	1.25 inch single lock, standing	--
Flashings			
Base	One inch 3 inch lap for expansion joint	One inch flat locked, soldered; sealed; 3 inch lap for expansion joint	Aluminum manufacturer's recommended hard setting sealant for locked aluminum joints. Fill each metal expansion joint with a joint sealing compound.
Cap-in reglet	3 inch lap	3 inch lap	Seal groove with joint sealing compound.
Reglets	Butt joint	--	Seal reglet groove with joint sealing compound.
Eave	One inch flat locked, cleated. One inch loose locked, sealed expansion joint, cleated.	One inch flat locked, locked, cleated one inch loose locked, sealed expansion joints, cleated	Same as base flashing.
Stepped	3 inch lap	3 inch lap	--
Valley	6 inch lap cleated	6 inch lap cleated	--
Edge strip	Butt	Butt	--
Gravel stops:			
Extrusions	--	Butt with 1/2 inch space	Use sheet flashing beneath and a cover plate

TABLE II. SHEET METAL JOINTS			
TYPE OF JOINT			
Item Designation	Copper, Terne-Coated Stainless Steel, Zinc-Coated Steel and Stainless Steel	Aluminum	Remarks
Sheet, smooth	Butt with 1/4 inch space	Butt with 1/4 inch space	Use sheet flashing backup plate.
Sheet, corrugated	Butt with 1/4 inch space	Butt with 1/4 inch space	Use sheet flashing beneath and a cover plate or a combination unit
Gutters	1.5 inch lap, riveted and soldered	One inch flat locked riveted and sealed	Aluminum producers recommended hard setting sealant for locked aluminum joints.
(a) Provide a 3 inch lap elastomeric flashing with manufacturer's recommended sealant.			
(b) Seal Polyvinyl chloride reglet with manufacturer's recommended sealant.			

-- End of Section --

P2# 519087 - DSSC DLA Repair Building 27
Columbus, OH

SECTION 07 92 00

JOINT SEALANTS
08/23

PART 1 GENERAL

1.1 REFERENCES

The publications listed below form a part of this specification to the extent referenced. The publications are referred to within the text by the basic designation only.

ASTM INTERNATIONAL (ASTM)

ASTM C734	(2015; R 2019) Standard Test Method for Low-Temperature Flexibility of Latex Sealants After Artificial Weathering
ASTM C919	(2024) Standard Practice for Use of Sealants in Acoustical Applications
ASTM C920	(2018) Standard Specification for Elastomeric Joint Sealants
ASTM C1193	(2016) Standard Guide for Use of Joint Sealants
ASTM C1521	(2019; R 2020) Standard Practice for Evaluating Adhesion of Installed Weatherproofing Sealant Joints
ASTM D217	(2021a) Standard Test Methods for Cone Penetration of Lubricating Grease
ASTM D2452	(2015; R 2019) Standard Test Method for Extrudability of Oil- and Resin-Base Caulking Compounds
ASTM D2453	(2015; R 2020; E 2020) Standard Test Method for Shrinkage and Tenacity of Oil- and Resin-Base Caulking Compounds
ASTM E84	(2023) Standard Test Method for Surface Burning Characteristics of Building Materials

CALIFORNIA DEPARTMENT OF PUBLIC HEALTH (CDPH)

CDPH SECTION 01350	(2017; Version 1.2) Standard Method for the Testing and Evaluation of Volatile Organic Chemical Emissions from Indoor Sources using Environmental Chambers

SCIENTIFIC CERTIFICATION SYSTEMS (SCS)

SCS	SCS Global Services (SCS) Indoor Advantage

SOUTH COAST AIR QUALITY MANAGEMENT DISTRICT (SCAQMD)

SCAQMD Rule 1168	(2022) Adhesive and Sealant Applications

UL SOLUTIONS (UL)

UL 2818	(2022) GREENGUARD Certification Program For Chemical Emissions For Building Materials, Finishes And Furnishings

1.2 SUBMITTALS

Government approval is required for submittals with a "G" or "S" classification. Submittals not having a "G" or "S" classification are for information only. When used, a code following the "G" classification identifies the office that will review the submittal for the Government. Submit the following in accordance with Section 01 33 00 SUBMITTAL PROCEDURES:

SD-03 Product Data

Sealants;

Primers;

Bond Breakers;

Backstops;

Caulking;

Cleaning Solvents;

SD-06 Test Reports

Field Adhesion;

SD-07 Certificates

Indoor Air Quality For Interior Sealants; S

Indoor Air Quality For Interior Floor Joint Sealants; S

Indoor Air Quality For Interior Acoustical Sealants; S

Indoor Air Quality For Interior Caulking; S

1.3 PRODUCT DATA

Include storage requirements, shelf life, curing time, instructions for mixing and application, and accessories. Provide manufacturer's Safety Data Sheets (SDS) for each solvent, primer and sealant material proposed.

1.4 CERTIFICATIONS

1.4.1 Indoor Air Quality Certifications

Submit required indoor air quality certifications in one submittal package.

1.4.1.1 Adhesives and Sealants

Provide products certified to meet indoor air quality requirements by UL 2818 (Greenguard) Gold, SCS Global Services Indoor Advantage Gold or provide certification or validation by other third-party program that products meet the requirements of this Section. Provide current product certification documentation from certification body. When product does not have certification, provide validation that product meets the indoor air quality product requirements cited herein.

1.5 ENVIRONMENTAL CONDITIONS

Apply sealant when the ambient temperature is between 40 and 90 degrees F.

1.6 DELIVERY AND STORAGE

Deliver materials to the jobsite in unopened manufacturers' sealed shipping containers, with brand name, date of manufacture, color, and material designation clearly marked thereon. Label elastomeric sealant containers to identify type, class, grade, and use. Handle and store materials in accordance with manufacturer's printed instructions. Prevent exposure to foreign materials or subjection to sustained temperatures exceeding 90 degrees F or lower than 0 degrees F. Keep materials and containers closed and separated from absorptive materials such as wood and insulation.

1.7 QUALITY ASSURANCE

1.7.1 Compatibility with Substrate

Verify that each sealant is compatible for use with each joint substrate in accordance with sealant manufacturer's printed recommendations for each application.

1.7.2 Joint Tolerance

Provide joint tolerances in accordance with manufacturer's printed instructions.

1.7.3 Mock-Up

Provide a mock-up of each type of sealant using materials, colors, and techniques approved for use on the project. Approved mock-ups may be incorporated into the Work.

1.7.4 Adhesion

Provide in accordance with ASTM C1193 or ASTM C1521.

PART 2 PRODUCTS

2.1 SEALANTS

Provide sealant products that have been tested, found suitable, and documented as such by the manufacturer for the particular substrates to which they will be applied.

In areas with ambient temperatures that exceed 110 degrees F, do not use polybutene, bituminous, acrylic-latex, polyvinyl acetate latex sealants,

polychloroprene (neoprene), polyvinyl chloride (PVC), and polyurethane foams, and neoprene, PVC, and styrene butadiene rubber extruded seals and closure strips due to these materials having maximum recommended surface temperature ranges from 130 to 180 degrees F.

2.1.1 Interior Sealants

Provide ASTM C920, Type S or M, Grade NS, Class 12.5, Use NT. Provide sealant products used on the interior of the building (defined as inside of the weatherproofing system) meeting either emissions requirements of CDPH SECTION 01350 (limit requirements for either office or classroom spaces regardless of space type) or VOC content requirements of SCAQMD Rule 1168. Provide certification or validation of indoor air quality for interior sealants. Location(s) and color(s) of sealant for the following (Note, color "as selected" refers to manufacturer's full range of color options):

LOCATION	COLOR
a. Small voids between walls or partitions and adjacent lockers, casework, shelving, door frames, built-in or surface mounted equipment and fixtures, and similar items.	As selected
b. Perimeter of frames at doors, windows, and access panels which adjoin exposed interior concrete and masonry surfaces.	Match existing.
c. Joints of interior masonry walls and partitions which adjoin columns, pilasters, concrete walls, and exterior walls unless otherwise detailed.	Match existing.
d. Joints between edge members for acoustical tile and adjoining vertical surfaces.	Match existing
e. Interior locations, not otherwise indicated or specified, where small voids exist between materials specified to be painted.	Match existing.
f. Joints between bathtubs and ceramic tile; joints between shower receptors and ceramic tile; joints formed where non-planar tile surfaces meet.	Match existing.
g. Joints formed between tile floors and tile base cove; joints between tile and dissimilar materials; joints occurring where substrates change.	As selected by Contracting Agent
h. Behind escutcheon plates at valve pipe penetrations and showerheads in showers.	As selected by Contracting Agent
i.	

2.1.2 Exterior Sealants

For joints in vertical surfaces, provide ASTM C920, Type S or M, Grade NS, Class 25, Use NT. For joints in horizontal surfaces, provide ASTM C920, Type S or M, Grade P, Class 25, Use T. Provide location(s) and color(s) of sealant as follows (Note, color "as selected" refers to manufacturer's full range of color options):

LOCATION	COLOR
a. Joints and recesses formed where frames and subsills of windows, doors, louvers, and vents adjoin masonry, concrete, or metal frames. Use sealant at both exterior and interior surfaces of exterior wall penetrations.	Match adjacent surface color
b. Joints between new and existing exterior masonry walls.	
c. Masonry joints where shelf angles occur.	
d. Joints in wash surfaces of stonework.	
e. Expansion and control joints.	Match existing.
f. Interior face of expansion joints in exterior concrete or masonry walls where metal expansion joint covers are not required.	Match existing.
g. Voids where items pass through exterior walls.	Match existing.
h. Metal reglets, where flashing is inserted into masonry joints, and where flashing is penetrated by coping dowels.	Match existing.
i. Metal-to-metal joints where sealant is indicated or specified.	Match existing.
j. Joints between ends of gravel stops, fascia, copings, and adjacent walls.	
k.	

2.1.3 Floor Joint Sealants

ASTM C920, Type S or M, Grade P, Class 25, Use T. Provide sealant products used on the interior of the building (defined as inside of the weatherproofing system) meeting either emissions requirements of CDPH SECTION 01350 (limit requirements for either office or classroom spaces regardless of space type) or VOC content requirements of SCAQMD Rule 1168. Provide certification or validation of indoor air quality for interior floor joint sealants. Provide location(s) and color(s) of sealant as follows (Note, color "as selected" refers to manufacturer's full range of color options):

LOCATION	COLOR
a. Seats of metal thresholds for exterior doors.	Match existing.
b. Control and expansion joints in floors, slabs, ceramic tile, and walkways.	Match existing.

2.1.4 Acoustical Sealants

Rubber or polymer based acoustical sealant in accordance with ASTM C919 to have a flame spread of 25 or less and a smoke developed rating of 50 or less when tested in accordance with ASTM E84. Provide non-staining acoustical sealant with a consistency of 250 to 310 when tested in accordance with ASTM D217. Acoustical sealant must remain flexible and adhesive after 500 hours of accelerated weathering as specified in ASTM C734. Provide sealant products used on the interior of the building (defined as inside of the weatherproofing system) meeting either emissions requirements of CDPH SECTION 01350 (limit requirements for either office or classroom spaces regardless of space type) or VOC content requirements of SCAQMD Rule 1168. Provide certification or validation of indoor air quality for interior acoustical sealants.

2.2 PRIMERS

Non-staining, quick drying type and consistency as recommended by the sealant manufacturer for the particular application. Provide primers for interior applications that meet the indoor air quality requirements of the paragraph INTERIOR SEALANTS above.

2.3 BOND BREAKERS

Type and consistency as recommended by the sealant manufacturer to prevent adhesion of the sealant to the backing or to the bottom of the joint. Provide bond breakers for interior applications that meet the indoor air quality requirements of the paragraph INTERIOR SEALANTS above.

2.4 CAULKING

For interior use and only where there is little or no anticipated joint movement. Provide in accordance with ASTM D2452 and ASTM D2453, Type I, for oil and resin-based caulking. Provide products used on the interior of the building (defined as inside of the weatherproofing system) meeting either emissions requirements of CDPH SECTION 01350 (limit requirements for either office or classroom spaces regardless of space type) or VOC content requirements of SCAQMD Rule 1168. Provide certification or validation of indoor air quality for interior caulking.

2.5 CLEANING SOLVENTS

Provide type(s) recommended by the sealant manufacturer and in accordance with environmental requirements herein. Protect adjacent aluminum and bronze surfaces from solvents. Provide solvents for interior applications that meet the indoor air quality requirements of the paragraph INTERIOR SEALANTS above.

PART 3 EXECUTION

3.1 FIELD QUALITY CONTROL

Perform a field adhesion test in accordance with manufacturer's instructions and ASTM C1193, Method A or ASTM C1521, Method A, Tail Procedure. Remove sealants that fail adhesion testing; clean substrates, reapply sealants, and re-test. Test sealants adjacent to failed sealants. Submit field adhesion test report indicating tests, locations, dates, results, and remedial actions taken.

3.2 SURFACE PREPARATION

Prepare surfaces according to manufacturer's printed installation instructions. Clean surfaces from dirt, frost, moisture, grease, oil, wax, lacquer, paint, or other foreign matter that would destroy or impair adhesion. Remove oil and grease with solvent; thoroughly remove solvents prior to sealant installation. Wipe surfaces dry with clean cloths. When resealing an existing joint, remove existing caulk or sealant prior to applying new sealant. For surface types not listed below, provide in accordance with sealant manufacturer's printed instructions for each specific surface.

3.2.1 Steel Surfaces

Remove loose mill scale by sandblasting or, if sandblasting is impractical or would damage finished work, scraping and wire brushing. Remove protective coatings by sandblasting or using a residue free solvent. Remove resulting debris and solvent residue prior to sealant installation.

3.2.2 Aluminum or Bronze Surfaces

Remove temporary protective coatings from surfaces that will be in contact with sealant. When masking tape is used as a protective coating, remove tape and residual adhesive prior to sealant application. For removing protective coatings and final cleaning, use non-staining solvents recommended by the manufacturer of the item(s) containing aluminum or bronze surfaces.

3.2.3 Concrete and Masonry Surfaces

Where surfaces have been treated with curing compounds, oil, or other such materials, remove materials by sandblasting or wire brushing. Remove laitance, efflorescence and loose mortar from the joint cavity. Remove resulting debris prior to sealant installation.

3.2.4 Wood Surfaces

Ensure wood surfaces that will be in contact with sealants are free of splinters, sawdust and other loose particles.

3.2.5 Removing Existing Hazardous Sealants

For sealants applied prior to 1979, or that have been tested and found to contain polychlorinated biphenyls (PCBs), remove and dispose of these sealants in accordance with Section 02 84 33 REMOVAL AND DISPOSAL OF POLYCHLORINATED BIPHENYLS (PCBs).

3.3 SEALANT PREPARATION

Do not add liquids, solvents, or powders to sealants. Mix multicomponent elastomeric sealants in accordance with manufacturer's printed instructions.

3.4 APPLICATION

3.4.1 Joint Width-To-Depth Ratios

Acceptable Ratios:

JOINT WIDTH	JOINT DEPTH	
	Minimum	Maximum
For metal, glass, or other nonporous surfaces:		
1/4 inch (minimum)	1/4 inch	1/4 inch
over 1/4 inch	1/2 of width	Equal to width
For wood, concrete, masonry, stone, or metal:		
1/4 inch (minimum)	1/4 inch	1/4 inch
over 1/4 inch to 1/2 inch	1/4 inch	Equal to width
over 1/2 inch to 1 inch	1/2 inch	5/8 inch
Over 1 inch	prohibited	

Unacceptable Ratios: Where joints of acceptable width-to-depth ratios have not been provided, clean out joints to acceptable depths and grind or cut to acceptable widths without damage to the adjoining work. Grinding is prohibited at metal surfaces.

3.4.2 Unacceptable Sealant Use

Do not install sealants in lieu of other required building enclosure weatherproofing components such as flashing, drainage components, and joint closure accessories, or to close gaps between walls, floors, roofs, windows, and doors, that exceed acceptable installation tolerances. Remove sealants that have been used in an unacceptable manner and correct building enclosure deficiencies to comply with contract documents requirements.

3.4.3 Masking Tape

Place masking tape on the finished surface on one or both sides of joint cavities to protect adjacent finished surfaces from primer or sealant smears. Remove masking tape within 10 minutes of joint filling and tooling.

3.4.4 Backstops

Provide backstops dry and free of tears or holes. Tightly pack the back

or bottom of joint cavities with backstop material to provide joints in specified depths. Provide backstops where indicated and where backstops are not indicated but joint cavities exceed the acceptable maximum depths specified in JOINT WIDTH-TO-DEPTH RATIOS Table.

3.4.5 Primer

Clean out loose particles from joints immediately prior to application of. Apply primer to joints in concrete masonry units, wood, and other porous surfaces in accordance with sealant manufacturer's printed instructions. Do not apply primer to exposed finished surfaces.

3.4.6 Bond Breaker

Provide bond breakers to surfaces not intended to bond in accordance with, sealant manufacturer's printed instructions for each type of surface and sealant combination specified.

3.4.7 Sealants

Provide sealants compatible with the material(s) to which they are applied. Do not use a sealant that has exceeded its shelf life or has jelled and cannot be discharged in a continuous flow from the sealant gun. Apply sealants in accordance with the manufacturer's printed instructions with a gun having a nozzle that fits the joint width. Work sealant into joints so as to fill the joints solidly without air pockets. Tool sealant after application to ensure adhesion. Apply sealant uniformly smooth and free of wrinkles. Upon completion of sealant application, roughen partially filled or unfilled joints, apply additional sealant, and tool smooth as specified. Apply sealer over sealants in accordance with the sealant manufacturer's printed instructions.

3.5 PROTECTION AND CLEANING

3.5.1 Protection

Protect areas adjacent to joints from sealant smears. Masking tape may be used for this purpose if removed 5 to 10 minutes after the joint is filled and no residual tape marks remain.

3.5.2 Final Cleaning

Upon completion of sealant application, remove remaining smears and stains and leave the work in a clean and neat condition.

a. Masonry and Other Porous Surfaces: Immediately remove fresh sealant that has been smeared on adjacent masonry, rub clean with a solvent, and remove solvent residue, in accordance with sealant manufacturer's printed instructions. Allow excess sealant to cure for 24 hours then remove by wire brushing or sanding. Remove resulting debris.

b. Metal and Other Non-Porous Surfaces: Remove excess sealant with a solvent moistened cloth. Remove solvent residue in accordance with solvent manufacturer's printed instructions.

-- End of Section --

P2# 519087 - DSSC DLA Repair Building 27
Columbus, OH

SECTION 08 11 13

STEEL DOORS AND FRAMES
08/20

PART 1 GENERAL

1.1 REFERENCES

The publications listed below form a part of this specification to the extent referenced. The publications are referred to within the text by the basic designation only.

ASTM INTERNATIONAL (ASTM)

ASTM A653/A653M	(2023) Standard Specification for Steel Sheet, Zinc-Coated (Galvanized) or Zinc-Iron Alloy-Coated (Galvannealed) by the Hot-Dip Process
ASTM A879/A879M	(2012; R 2017) Standard Specification for Steel Sheet, zinc Coated by the Electrolytic Process for Applications Requiring Designation of the Coating Mass on Each Surface
ASTM A924/A924M	(2022a) Standard Specification for General Requirements for Steel Sheet, Metallic-Coated by the Hot-Dip Process
ASTM C578	(2023) Standard Specification for Rigid, Cellular Polystyrene Thermal Insulation
ASTM C591	(2022) Standard Specification for Unfaced Preformed Rigid Cellular Polyisocyanurate Thermal Insulation
ASTM C612	(2014; R 2019) Standard Specification for Mineral Fiber Block and Board Thermal Insulation
ASTM D2863	(2019) Standard Test Method for Measuring the Minimum Oxygen Concentration to Support Candle-Like Combustion of Plastics (Oxygen Index)
ASTM E1300	(2024) Standard Practice for Determining Load Resistance of Glass in Buildings
ASTM F2247	(2018) Standard Test Method for Metal Doors Used in Blast Resistant Applications (Equivalent Static Load Method)
ASTM F2248	(2012) Standard Practice for Specifying an Equivalent 3-Second Duration Design Loading for Blast Resistant Glazing Fabricated with Laminated Glass

ASTM F2927	(2012) Standard Test Method for Door Systems Subject to Airblast Loadings

BUILDERS HARDWARE MANUFACTURERS ASSOCIATION (BHMA)

ANSI/BHMA A156.115	(2016) Hardware Preparation in Steel Doors and Steel Frames

STEEL DOOR INSTITUTE (SDI/DOOR)

SDI/DOOR 111	(2009) Recommended Details for Standard Steel Doors, Frames, and Accessories and Related Components
SDI/DOOR 113	(2023) Standard Practice for Determining the Steady-State Thermal Transmittance of Steel Door and Frame Assemblies
SDI/DOOR A250.6	(2020) Recommended Practice for Hardware Reinforcing on Standard Steel Doors and Frames
SDI/DOOR A250.8	(2023) Specifications for Standard Steel Doors and Frames
SDI/DOOR A250.11	(2022) Recommended Erection Instructions for Steel Frames

U.S. DEPARTMENT OF DEFENSE (DOD)

UFC 4-010-01	(2018; with Change 3, 2024) DoD Minimum Antiterrorism Standards for Buildings

1.2 SUBMITTALS

Government approval is required for submittals with a "G" or "S" classification. Submittals not having a "G" or "S" classification are for Contractor Quality Control approval. Submittals not having a "G" or "S" classification are for information only. When used, a code following the "G" classification identifies the office that will review the submittal for the Government. Submit the following in accordance with Section 01 33 00 SUBMITTAL PROCEDURES:

SD-02 Shop Drawings

Doors;

Frames;

Accessories

Schedule of Doors;

Schedule of Frames;

SD-03 Product Data

Doors;

Recycled Content for Steel Door Product; S

Frames;

Recycled Content for Steel Frame Product; S

Accessories

SD-04 Samples

Factory-applied Enamel Finish;

1.3 DELIVERY, STORAGE, AND HANDLING

Deliver doors, frames, and accessories undamaged and with protective wrappings or packaging. Strap knock-down frames in bundles. Store doors and frames on platforms under cover in clean, dry, ventilated, and accessible locations, with 1/4 inch airspace between doors. Remove damp or wet packaging immediately and wipe affected surfaces dry. Replace damaged materials with new.

PART 2 PRODUCTS

2.1 STANDARD STEEL DOORS

SDI/DOOR A250.8, except as specified otherwise. Prepare doors to receive door hardware as specified in Section 08 71 00 DOOR HARDWARE. Undercut where indicated. Provide exterior doors with top edge closed flush and sealed to prevent water intrusion. Provide doors at 1-3/4 inch thick, unless otherwise indicated. Provide door material that uses a minimum of 25 percent recycled content. Provide data indicating percentage of recycled content for steel door product. Provide exterior glazing in accordance with ASTM F2248 and ASTM E1300. Exterior doors must be tested in accordance with ASTM F2247 or ASTM F2927 to meet requirements of UFC 4-010-01.

2.1.1 Classification - Level, Performance, Model

2.1.1.1 Standard Duty Doors

SDI/DOOR A250.8, Level 1, physical performance Level C, Model 1 , of size(s) and design(s) indicated and core construction as required by the manufacturer. Provide where shown.

2.1.1.2 Heavy Duty Doors

SDI/DOOR A250.8, Level 2, physical performance Level B, Model 1, with core construction as required by the manufacturer for interior doors and for exterior doors, of size(s) and design(s) indicated. Where vertical stiffener cores are required, the space between the stiffeners must be filled with board insulation.

2.2 NOT USED

2.3 INSULATION CORES

Provide insulating cores at all exterior doors and other specific doors noted in the door schedule, and provide an apparent U-factor of.48 in accordance with SDI/DOOR 113 and conforming to:

a. Rigid Cellular Polyisocyanurate Foam: ASTM C591, Type I or II, foamed-in-place or in board form, with oxygen index of not less than 22 percent when tested in accordance with ASTM D2863; or

b. Rigid Polystyrene Foam Board: ASTM C578, Type I or II; or

c. Mineral board: ASTM C612, Type I.

2.4 STANDARD STEEL FRAMES

SDI/DOOR A250.8, Level 1, except as otherwise specified. Form frames to sizes and shapes indicated, with knock-down field-assembled corners. Provide steel frames for doors, unless otherwise indicated. Provide frame product that uses a minimum of 25 percent recycled content. Provide data indicating percentage of recycled content for steel frame product.

2.4.1 Knock-Down Frames

Design corners for simple field assembly by concealed tenons, splice plates, or interlocking joints that produce square, rigid corners and a tight fit and maintain the alignment of adjoining members. Provide locknuts for bolted connections.

2.4.2 Stops and Beads

Provide form and loose stops and beads from 20 gage steel. Provide for glazed and other openings in standard steel frames. Secure beads to frames with oval-head, countersunk Phillips self-tapping sheet metal screws or concealed clips and fasteners. Space fasteners approximately 12 to 16 inch on center. Miter molded shapes at corners. Butt or miter square or rectangular beads at corners.

2.4.3 Terminated Stops

Where indicated, terminate interior door frame stops 6 inch above floor.

2.4.4 Cased Openings

Fabricate frames for cased openings of same material, gage, and assembly as specified for metal door frames, except omit door stops and preparation for hardware.

2.4.5 Anchors

Provide anchors to secure the frame to adjoining construction. Provide steel anchors, zinc-coated not lighter than 18 gage.

2.4.5.1 Wall Anchors

Provide at least three anchors for each jamb. For frames which are more than 7.5 feet in height, provide one additional anchor for each jamb for each additional 2.5 feet or fraction thereof.

a. Masonry: Provide anchors of corrugated or perforated steel straps or 3/16 inch diameter steel wire, adjustable or T-shaped;

b. Stud partitions: Weld or otherwise securely fasten anchors to backs of frames. Design anchors to be fastened to closed steel

studs with sheet metal screws, and to open steel studs by wiring or welding;

c. Completed openings: Secure frames to previously placed concrete or masonry with expansion bolts in accordance with SDI/DOOR 111; and

d. Solid plaster partitions: Secure anchors solidly to back of frames and tie into the lath. Provide adjustable top strut anchors on each side of frame for fastening to structural members or ceiling construction above. Provide size and type of strut anchors as recommended by the frame manufacturer.

2.4.5.2 Floor Anchors

Provide floor anchors drilled for 3/8 inch anchor bolts at bottom of each jamb member.

2.5 EXTERIOR FRAMES

Provide thermal insulation in all exterior frames. Provide frames of a minimum Level 4, with frames of a minimum thickness of 0.067 inch, 14 gage.

2.6 HARDWARE PREPARATION

Drill and tap doors and frames to receive finish hardware. Prepare doors and frames for hardware in accordance with the applicable requirements of SDI/DOOR A250.8 and SDI/DOOR A250.6. For additional requirements refer to ANSI/BHMA A156.115. Drill and tap for surface-applied hardware at the project site. Build additional reinforcing for surface-applied hardware into the door at the factory. Punch door frames, with the exception of frames that will have weatherstripping gasketing, to receive a minimum of two rubber or vinyl door silencers on lock side of single doors and one silencer for each leaf at heads of double doors. Set lock strikes out to provide clearance for silencers.

2.7 FINISHES

2.7.1 Hot-Dip Zinc-Coated and Factory-Primed Finish

Fabricate scheduled doors and frames from hot dipped zinc coated steel, alloyed type, that complies with ASTM A924/A924M and ASTM A653/A653M. The coating weight must meet or exceed the minimum requirements for coatings having 0.4 ounces per square foot, total both sides, i.e., A40. Repair damaged zinc-coated surfaces by the application of zinc dust paint. Thoroughly clean and chemically treat to insure maximum paint adhesion. Factory prime as specified in SDI/DOOR A250.8. Provide for exterior doors and interior doors.

2.7.2 Electrolytic Zinc-Coated Anchors and Accessories

Provide electrolytically deposited zinc-coated steel in accordance with ASTM A879/A879M, Commercial Quality, Coating Class A. Phosphate treat and factory prime zinc-coated surfaces as specified in SDI/DOOR A250.8.

2.8 FABRICATION AND WORKMANSHIP

Provide finished doors and frames that are strong and rigid, neat in appearance, and free from defects, waves, scratches, cuts, dents, ridges,

holes, warp, and buckle. Provide molded members that are clean cut, straight, and true, with joints coped or mitered, well formed, and in true alignment. Dress exposed welded and soldered joints smooth. Design door frame sections for use with the wall construction indicated. Corner joints must be well formed and in true alignment. Conceal fastenings where practicable. Design frames in exposed masonry walls or partitions to allow sufficient space between the inside back of trim and masonry to receive caulking compound.

2.9 PROVISIONS FOR GLAZING

Materials are specified in Section 08 81 00, GLAZING.

PART 3 EXECUTION

3.1 INSTALLATION

3.1.1 Frames

Set frames in accordance with SDI/DOOR A250.11. Plumb, align, and brace securely until permanent anchors are set. Anchor bottoms of frames with expansion bolts or powder-actuated fasteners. Build in or secure wall anchors to adjoining construction.

3.1.2 Doors

Hang doors in accordance with clearances specified in SDI/DOOR A250.8. After erection and glazing, clean and adjust hardware.

3.2 PROTECTION

Protect doors and frames from damage. Repair damaged doors and frames prior to completion and acceptance of the project or replace with new, as directed. Wire brush rusted frames until rust is removed. Clean thoroughly. Apply an all-over coat of rust-inhibitive paint of the same type used for shop coat.

3.3 CLEANING

Upon completion, clean exposed surfaces of doors and frames thoroughly. Remove mastic smears and other unsightly marks.

-- End of Section --

SECTION 08 11 16

ALUMINUM DOORS AND FRAMES
05/17, CHG 2: 11/18

PART 1 GENERAL

1.1 REFERENCES

The publications listed below form a part of this specification to the extent referenced. The publications are referred to within the text by the basic designation only.

ALUMINUM ASSOCIATION (AA)

AA DAF45	(2003; Reaffirmed 2009) Designation System for Aluminum Finishes

AMERICAN ARCHITECTURAL MANUFACTURERS ASSOCIATION (AAMA)

AAMA 2603	(2020) Voluntary Specification, Performance Requirements and Test Procedures for Pigmented Organic Coatings on Aluminum Extrusions and Panels

AMERICAN SOCIETY OF HEATING, REFRIGERATING AND AIR-CONDITIONING ENGINEERS (ASHRAE)

ASHRAE 90.1 - IP	(2019) Energy Standard for Buildings Except Low-Rise Residential Buildings

ASTM INTERNATIONAL (ASTM)

ASTM A36/A36M	(2019) Standard Specification for Carbon Structural Steel
ASTM B209	(2014) Standard Specification for Aluminum and Aluminum-Alloy Sheet and Plate
ASTM B209M	(2014) Standard Specification for Aluminum and Aluminum-Alloy Sheet and Plate (Metric)
ASTM B221	(2021) Standard Specification for Aluminum and Aluminum-Alloy Extruded Bars, Rods, Wire, Profiles, and Tubes
ASTM B221M	(2021) Standard Specification for Aluminum and Aluminum-Alloy Extruded Bars, Rods, Wire, Profiles, and Tubes (Metric)
ASTM E283	(2019) Standard Test Method for Determining the Rate of Air Leakage Through Exterior Windows, Curtain Walls, and Doors Under Specified Pressure Differences Across the Specimen
ASTM E331	(2000; R 2023) Standard Test Method for Water Penetration of Exterior Windows,

	Skylights, Doors, and Curtain Walls by Uniform Static Air Pressure Difference
ASTM F1642/F1642M	(2017) Standard Test Method for Glazing and Glazing Systems Subject to Airblast Loadings
ASTM F1643	(2012) Standard Test Methods for Detention Sliding Door Locking Device Assembly
ASTM F2247	(2018) Standard Test Method for Metal Doors Used in Blast Resistant Applications (Equivalent Static Load Method)

NATIONAL FENESTRATION RATING COUNCIL (NFRC)

NFRC 100	(2020) Procedure for Determining Fenestration Product U-Factors
NFRC 200	(2020) Procedure for Determining Fenestration Product Solar Heat Gain Coefficient and Visible Transmittance at Normal Incidence

1.2 PERFORMANCE REQUIREMENTS

1.2.1 Structural Calculations

1.2.1.1 Minimum Antiterrorism Performance

Provide doors meeting the minimum antiterrorism performance as specified in the paragraphs below.

a. Dynamic Design Analysis Method

As an alternative to the static equivalent load design approach described above, glazed opening framing members, anchors, and glazing may be designed using a dynamic analysis to prove the glazed opening system will provide performance equivalent to or better than a very low hazard rating in accordance with ASTM F1642/F1642M associated with the applicable low level of protection for the project.

1.2.2 Air Infiltration

When tested in accordance with ASTM E283, air infiltration per door leaf cannot exceed 0.6 cubic feet per minute per square foot of fixed area at a test pressure of 6.24 pounds per square foot.

1.2.3 Water Penetration

When tested in accordance with ASTM E331, there can be no water penetration at a pressure of 2.86 pounds per square foot of fixed area.

1.2.4 Thermal Transmittance, Solar Heat Gain, Visible Light Transmittance

Provide products bearing NFRC Project Label Certificates for Fenestration verifying compliance with requirements for each assembly indicated. An NFRC Bid Report, or approved equal, for field assembled exterior doors may be submitted in lieu of Project Label Certificates for Fenestration if

such reports are created in accordance with NFRC CAMP procedures and are provided by the manufacturer. Such alternate reports may be submitted with shop drawings, however, NFRC validated Project Label Certificates for Fenestration are required as a Closeout Submittal. Contact NFRC for information on NFRC 100 and NFRC 200 Compliance and Monitoring Program (CAMP) rating requirements: http://www.nfrc.org/industry/certification/compliance-and-monitoring-program-camp/

1.2.4.1 U-Factor

Provide exterior glazed assemblies, including aluminum entrances doors with greater than 50 percent glazed area, certified by the NFRC as having a whole window U-factor of 0.30 or less as determined in accordance with ASHRAE 90.1 - IP and as verified in accordance with NFRC 100.

1.2.4.2 Solar Heat Gain Coefficient (SHGC)

Provide exterior glazed assemblies, including aluminum entrances doors with greater than 50 percent glazed area, certified by the National Fenestration Rating Council with a whole window SHGC of 0.40 or less as determined in accordance with ASHRAE 90.1 - IP and as verified in accordance with NFRC 200.

1.2.4.3 Visible Light Transmittance (VLT)

Provide exterior glazed assemblies, including aluminum entrances doors with greater than 50 percent glazed area, certified by the NFRC with a whole window VLT of 0.70 or greater as determined in accordance with ASHRAE 90.1 - IP and as verified in accordance with NFRC 200.

1.3 SUBMITTALS

Government approval is required for submittals with a "G" or "S" classification. Submittals not having a "G" or "S" classification are for Contractor Quality Control approval. Submittals not having a "G" or "S" classification are for information only. When used, a code following the "G" classification identifies the office that will review the submittal for the Government. Submit the following in accordance with Section 01 33 00 SUBMITTAL PROCEDURES:

SD-02 Shop Drawings

For Each Type of Door and Frame Assembly;

SD-03 Product Data

For Each Type of Door and Frame Assembly;

Recycled Content of Aluminum Material; S

SD-04 Samples

Finish Samples;

SD-05 Design Data

Structural Calculations for Deflection and Antiterrorism;

SD-06 Test Reports

Air Infiltration;

Water Penetration;

SD-07 Certificates

NFRC Project Label Certificates for Fenestration;

SD-08 Manufacturer's Instructions

Installation of Each Type of Door and Frame Assembly;

SD-10 Operation and Maintenance Data

Adjustments, Cleaning, and Maintenance;

SD-11 Closeout Submittals

NFRC Project Label Certificates for Fenestration;

1.4 DELIVERY, STORAGE, AND HANDLING

Inspect materials delivered to the site for damage. Unload and store with minimum handling. Provide storage space in dry location with adequate ventilation, free from dust or water, and easily accessible for inspection and handling. Stack materials on non-absorptive strips or wood platforms. Do not cover doors and frames with tarps, polyethylene film, or similar coverings. Protect finished surfaces during shipping and handling using manufacturer's standard method. Do not apply coatings or lacquers to surfaces to which caulking and glazing compounds must adhere.

1.5 QUALITY CONTROL

1.5.1 Shop Drawing

Indicate elevations and sections for each type of door and frame assembly. Show sizes and details of each assembly, frame construction,subframe attachment, thickness and gages of metal, details of door and frame construction, proposed method(s) of anchorage, glazing details, provisions for an location of hardware, mullion details, method and materials for flashing and weatherstripping, miscellaneous trim, installation details, and other related items necessary for a complete representation of all components. A qualified blast engineer must perform testing or calculations for door system design resistance to specified blast loads.

1.5.2 Finish Samples

Submit two color charts and two finish sample chips from manufacturer's standard color and finish options for each type of finish indicated.

1.5.3 Test Reports

Test door assembly including glazing for evaluation of hazards generated from airblast loading in accordance with ASTM F2247 by an independent testing agency regularly engaged in blast testing. This test method and the resulting data are valid for the door size tested and smaller doors of identical construction.

The acceptance criteria for the proposed door systems, as determined by the damage level/door response damage criterial of ASTM F2247, will provide a performance equivalent to or better than a category ; III; door damage level rating. Door glazing performance must be equivalent to or better than H4 - Low hazard rating in accordance with ASTM F1643.

1.5.4 Operation and Maintenance Data

Submit detailed instructions for installation, adjustments, cleaning, and maintenance of each type of assembly indicated.

1.6 QUALITY ASSURANCE

1.6.1 Engineer Qualifications for Blast Design

All blast design calculations must be performed by or under the direct supervision of a registered engineer with a minimum of 5 years' experience performing blast design. The engineering firm performing the blast design must be able to demonstrate experience on similar size projects using similar design methods to meet the requirements outlined in this specification.

PART 2 PRODUCTS

2.1 DOORS AND FRAMES

Provide swing-type aluminum doors and frames of size, design, and location indicated. Provide doors complete with frames, framing members, subframes, transoms, adjoining side lites , trim, and accessories. Coordinate side lites, window walls, adjacent curtainwall with Section 08 41 13 ALUMINUM-FRAMED ENTRANCES AND STOREFRONTS.

2.2 MATERIALS

2.2.1 Anchors

Stainless steel or steel with hot-dipped galvanized finish.

2.2.2 Weatherstripping

Continuous wool pile, silicone treated, or type recommended by door manufacturer.

2.2.3 Aluminum Alloy for Doors and Frames

ASTM B221M, ASTM B221, Alloy 6063-T5 for extrusions. ASTM B209M, ASTM B209, alloy and temper best suited for aluminum sheets and strips. Provide aluminum materials that include a minimum of 30 percent recycled content. Provide data indicating percentage of recycled content of aluminum material.

2.2.4 Fasteners

Hard aluminum or stainless steel.

2.2.5 Structural Steel

ASTM A36/A36M.

2.2.6 Aluminum Paint

Aluminum door manufacturer's standard aluminum paint.

2.3 FABRICATION

2.3.1 Aluminum Frames

Extruded aluminum shapes with contours approximately as indicated. Provide removable glass stops and glazing beads for frames accommodating fixed glass. Use countersunk stainless steel Phillips screws for exposed fastenings, and space not more than 12 inches on center. Mill joints in frame members to a hairline fit, reinforce, and secure mechanically.

2.3.2 Aluminum Doors

Of type, size, and design indicated and minimum 1-3/4 inch thick. minimum wall thickness, 0.125 inch, except beads and trim, 0.050 inch. Door sizes shown are nominal; include standard clearances as follows: 0.093 inch at hinge and lock stiles, 0.125 inch between meeting stiles, 0.125 inch at top rails, 0.187 inch between bottom and threshold, and 0.687 inch between bottom and floor.

2.3.2.1 Full Glazed Stile and Rail Doors

Provide doors with narrow stiles and rails as indicated. Fabricate from extruded aluminum hollow seamless tubes or from a combination of open-shaped members interlocked or welded together. Fasten top and bottom rail together by means of welding or by 3/8 or 1/2 inch diameter cadmium-plated tensioned steel tie rods. Provide an adjustable mechanism of jack screws or other methods in the top rail to allow for minor clearance adjustments after installation.

2.3.2.2 Flush Doors

Use facing sheets with a plain smooth surface. Use one of the following constructions:

a. A phenolic resin-impregnated kraft paper honeycomb core, surrounded at edges and around glass and louvered areas with extruded aluminum shapes. Provide cores with a minimum impregnation of 18 percent resin content. Provide sheet aluminum door facings minimum 0.032 inch thick laminated to a 0.10 inch thick tempered hardboard backing, with the backing bonded to the honeycomb core. Bond facing sheets to cores under heat and pressure with thermosetting adhesive and mechanically lock to extruded edge members.

b. A phenolic resin-impregnated kraft paper honeycomb core. Use aluminum facing sheets minimum 0.050 inch thick and form into two pans to eliminate seams on faces. Bond honeycomb core to face sheets using epoxy resin or contact cement-type adhesive.

c. A solid fibrous core, surrounded at edges and around glass and louvered areas and cross braced at intermediate points with extruded aluminum shapes. Use aluminum facing sheets of minimum 0.050 inch thickness. Bond facing sheets to core under heat and pressure with a thermosetting adhesive, and mechanically lock to the extruded edge members.

d. Form from extruded tubular stiles and rails mitered at corners, reinforce, and continuously weld at miters. Provide facing sheets of minimum 0.032 inch thick sheet aluminum internally reinforced with aluminum channels or Z-bars placed horizontally not more than 16 inch apart and extending the full width of panels. Fit spaces between reinforcing with sound-deadening insulation. Weld facing sheets to reinforcing bars or channels and to stiles and rails. Finish facing sheets flush with faces of stiles and rails.

e. Form from an internal grid composed of extruded aluminum tubular sections. Provide tubular sections at all sides and perimeter of louver and glass openings. Provide three extruded aluminum tubular sections at top and bottom of each door. Provide wall thickness of tubular sections minimum 0.09 inch except at lock rails which must be minimum0.125 inch thick, hinge lock rails which must be minimum 0.125 inch thick, and hinge rail edges which must be minimum 0.19 inch thick. Fill spaces in door with mineral insulation. Provide facing sheets of aluminum minimum 0.09 inch thick.

f. Form from extruded aluminum members at top and bottom, both sides, and at perimeters of louver and glass openings. Provide wall sections of extruded aluminum members minimum 0.09 inch thick and reinforce for application of hardware. Cover framing members on both sides with aluminum facing sheets minimum 0.064 inch thick. Fill door panels with 25 pounds per square inch density polystyrene with a flame spread rating of no more than 25.

2.3.3 Welding and Fastening

Where possible, locate welds on unexposed surfaces. Dress welds on exposed surfaces smoothly. Select welding rods, filler wire, and flux to produce a uniform texture and color in finished work. Remove flux and spatter from surfaces immediately after welding. Exposed screws or bolts will be permitted only in inconspicuous locations, and must have countersunk heads. Weld concealed reinforcements for hardware in place.

2.3.4 Weatherstripping

Provide on stiles and rails of exterior doors. Fit into slots which are integral with doors or frames. Weatherstripping must be replaceable without special tools, and adjustable at meeting rails of pairs of doors. During installation, verify doors swing freely and close positively. Refer to paragraph AIR INFILTRATION for air leakage requirements and testing.

2.3.5 Anchors

On the backs of subframes, provide anchors of the sizes and shapes indicated for securing subframes to adjacent construction. Anchor transom bars at ends and mullions at head and sill. Place anchors near top and bottom of each jamb and at intermediate points not more than 25 inch apart.

2.3.6 Provisions for Hardware

Coordinate with Section 08 71 00 DOOR HARDWARE. Deliver hardware templates and hardware (except field-applied hardware) to the door manufacturer for use in fabrication of aluminum doors and frames. Cut, reinforce, drill, and tap doors and frames at the factory to receive template hardware. Provide doors to receive surface-applied hardware,

except push plates, kick plates, and mop plates, with reinforcing only; drill and tap in the field. Provide hardware reinforcements of stainless steel or steel with hot-dipped galvanized finish, and secure with stainless steel screws. Provide reinforcement in core of flush doors as required to receive locks, door closers, and other hardware.

2.3.7 Provisions for Glazing

Provide glazing beads with vinyl insert glazing gaskets. Coordinate requirements with Section 08 81 00 GLAZING.

2.3.8 Finishes

Provide exposed aluminum surfaces with factory finish of anodic coating or organic coating.

2.3.8.1 Anodic Coating

Clean exposed aluminum surfaces and provide an anodized finish conforming to AA DAF45. Provide integral color-anodized, designation AA-M10-C22-A42, Architectural Class I 0.7 mil or thicker finish. Provide material(s) in color(s) to match existing..

2.3.8.2 Organic Coating

Clean and prime exposed aluminum surfaces. Provide a baked enamel finish in accordance with AAMA 2603 with total dry film thickness minimum 0.8 mil. Finish color to be as selected from manufacturer's complete range of color options.

PART 3 EXECUTION

3.1 INSTALLATION

Plumb, square, level, and align frames and framing members to receive doors, transoms, adjoining side lites, and, adjoining window walls. Anchor frames to adjacent construction as indicated and in accordance with manufacturer's printed instructions and the approved shop drawings. Install anchorage that complies with applicable structural requirements. Anchor bottom of each frame to rough floor construction with 3/32 inch thick minimum stainless steel angle clips secured to back of each jamb and to floor construction; use stainless steel bolts and expansion rivets for fastening clip anchors. Hang doors to produce clearances specified in paragraph ALUMINUM DOORS. After erection and glazing, adjust doors and hardware to operate properly.

3.2 PROTECTION FROM DISSIMILAR MATERIALS

3.2.1 Dissimilar Metals

Where aluminum surfaces come in contact with metals other than stainless steel, zinc, or small areas of white bronze, protect from direct contact to dissimilar metals.

3.2.1.1 Protection

Provide one of the following systems to protect surfaces in contact with dissimilar metals:

a. Paint the dissimilar metal with one coat of heavy-bodied bituminous paint.

b. Apply elastomeric sealant between aluminum and dissimilar metals in accordance with Section 07 92 00 JOINT SEALANTS.

c. Paint dissimilar metals with one coat of primer and one coat of aluminum paint.

d. Use a non-absorptive tape or gasket in permanently dry locations.

3.2.2 Drainage from Dissimilar Metals

In locations where drainage from dissimilar metals has direct contact with aluminum, provide protective paint to prevent aluminum discoloration.

3.2.3 Masonry and Concrete

Provide aluminum surfaces in contact with mortar, concrete, or other masonry materials with one coat of heavy-bodied bituminous paint.

3.2.4 Wood or Other Absorptive Materials

Provide aluminum surfaces in contact with absorptive materials subject to frequent moisture, and aluminum surfaces in contact with treated wood, with two coats of aluminum paint or one coat of heavy-bodied bituminous paint. In lieu of painting aluminum, paint the wood or other absorptive surface with two coats of aluminum paint and seal joints with elastomeric sealant.

3.3 SEALING AROUND ASSEMBLIES

Seal all penetrations of the air barrier by sealing around door openings as necessary to achieve compliance with air leakage requirements indicated in the air barrier sections of the specifications. Flash all doors with corrosion resistant flashing to prevent water intrusion.

3.4 CLEANING

Upon completion of installation, clean door and frame surfaces in accordance with door manufacturer's written recommended procedure. Do not use abrasive, caustic, or acid cleaning agents.

3.5 PROTECTION

Protect doors and frames from damage and from contamination by other materials such as cement mortar. Prior to completion and acceptance of the work, restore damaged doors and frames to original condition, or replace with new ones.

-- End of Section --

SECTION 08 33 23

OVERHEAD COILING DOORS
08/20, CHG 1: 02/22

PART 1 GENERAL

1.1 REFERENCES

The publications listed below form a part of this specification to the extent referenced. The publications are referred to within the text by the basic designation only.

AMERICAN SOCIETY OF CIVIL ENGINEERS (ASCE)

ASCE 7-16	(2017; Errata 2018; Supp 1 2018) Minimum Design Loads and Associated Criteria for Buildings and Other Structures

AMERICAN SOCIETY OF HEATING, REFRIGERATING AND AIR-CONDITIONING ENGINEERS (ASHRAE)

ASHRAE FUN IP	(2021) Fundamentals Handbook, I-P Edition

ASTM INTERNATIONAL (ASTM)

ASTM A36/A36M	(2019) Standard Specification for Carbon Structural Steel
ASTM A47/A47M	(1999; R 2022; E 2022) Standard Specification for Ferritic Malleable Iron Castings
ASTM A48/A48M	(2022) Standard Specification for Gray Iron Castings
ASTM A53/A53M	(2024) Standard Specification for Pipe, Steel, Black and Hot-Dipped, Zinc-Coated, Welded and Seamless
ASTM A123/A123M	(2024) Standard Specification for Zinc (Hot-Dip Galvanized) Coatings on Iron and Steel Products
ASTM A153/A153M	(2023) Standard Specification for Zinc Coating (Hot-Dip) on Iron and Steel Hardware
ASTM A307	(2021) Standard Specification for Carbon Steel Bolts, Studs, and Threaded Rod 60 000 PSI Tensile Strength
ASTM A653/A653M	(2023) Standard Specification for Steel Sheet, Zinc-Coated (Galvanized) or Zinc-Iron Alloy-Coated (Galvannealed) by the Hot-Dip Process
ASTM A666	(2023) Standard Specification for Annealed

	or Cold-Worked Austenitic Stainless Steel Sheet, Strip, Plate and Flat Bar
ASTM A780/A780M	(2020) Standard Practice for Repair of Damaged and Uncoated Areas of Hot-Dip Galvanized Coatings
ASTM A924/A924M	(2022a) Standard Specification for General Requirements for Steel Sheet, Metallic-Coated by the Hot-Dip Process
ASTM B221	(2021) Standard Specification for Aluminum and Aluminum-Alloy Extruded Bars, Rods, Wire, Profiles, and Tubes
ASTM E84	(2023) Standard Test Method for Surface Burning Characteristics of Building Materials
ASTM E330/E330M	(2014; R 2021) Standard Test Method for Structural Performance of Exterior Windows, Doors, Skylights and Curtain Walls by Uniform Static Air Pressure Difference
ASTM F568M	(2007) Standard Specification for Carbon and Alloy Steel Externally Threaded Metric Fasteners

DOOR AND ACCESS SYSTEM MANUFACTURERS ASSOCIATION (DASMA)

ANSI/DASMA 108	(2017) Standard Method for Testing Sectional Garage Doors, Rolling Doors and Flexible Doors: Determination of Structural Performance Under Uniform Static Air Pressure Difference

1.2 SUBMITTALS

Government approval is required for submittals with a "G" or "S" classification. Submittals not having a "G" or "S" classification are for information only. When used, a code following the "G" classification identifies the office that will review the submittal for the Government. Submit the following in accordance with Section 01 33 00 SUBMITTAL PROCEDURES:

SD-02 Shop Drawings

Overhead Coiling Doors;

Counterbalancing Mechanism;

Manual Door Operators;

Electric Door Operators;

Bottom Bars;

Guides;

Mounting Brackets;

Hood;

Installation Drawings;

SD-03 Product Data

Overhead Coiling Doors;

Hardware;

Counterbalancing Mechanism;

Manual Door Operators;

Electric Door Operators;

Recycled content for steel curtain slats; S

Recycled content for stainless steel curtain slats; S

SD-05 Design Data

Overhead Coiling Doors;

Hardware;

Counterbalancing Mechanism;

Manual Door Operators;

Electric Door Operators;

SD-10 Operation and Maintenance Data

Operation and Maintenance Manuals, Data Package 2;

SD-11 Closeout Submittals

Warranty;

1.3 QUALITY CONTROL

Provide fire-rated door assemblies bearing the Underwriters Laboratories, Warnock Hersey, Factory Mutual or other nationally recognized testing laboratory label for the rating listed on the drawings. Provide a permanent label for each door showing the manufacturer's name and address, and the model/serial number of the door.

Provide oversized fire-rated door assemblies with a listing agency oversize label, or a certificate signed by an official of the manufacturing company certifying that the door and operator are designed to meet the specified requirements.

1.3.1 Warranty

Furnish a written guarantee that the helical spring and counterbalance

mechanism are free from defects in material and workmanship for not less than two years after completion and acceptance of the project.

Warrant that upon notification by the Government, any defects in material, workmanship, and door operation are immediately correct within the same time period covered by the guarantee, at no cost to the Government.

1.3.2 Operation And Maintenance Submittals

Submit 6 copies of the operation and maintenance manuals 30 calendar days prior to testing the Overhead Coiling Door Assemblies. Update and resubmit data for final approval no later than 30 calendar days prior to cContract completion.

Submit Operation and Maintenance Manuals for Overhead Coiling Door Assemblies, including the following items:

Manual Door Operators

Electric Door Operators

Hood

Counterbalancing Mechanism

Painting

Provide operation and maintenance manuals which are consistent with manufacturer's standard brochures, schematics, printed instructions, operating procedures, and safety precautions.

1.4 DELIVERY, STORAGE, AND HANDLING

Deliver doors to the jobsite wrapped in a protective covering with the brands and names clearly marked thereon. Store doors in an adequately ventilated dry location that is free from dirt and dust, water, or other contaminants. Store in a manner that permits easy access for inspection and handling. Handle doors carefully to prevent damage. Remove damaged items that cannot be restored to like-new condition and provide new items.

PART 2 PRODUCTS

2.1 SYSTEM DESCRIPTION

Provide overhead coiling doors with interlocking slats, complete with anchoring and door hardware, guides, hood, and operating mechanisms, and designed for use on openings as indicated. Doors must be spring counterbalanced, rolling type, and designed for use on exterior openings, as indicated. Doors must be operated by hand chain with gear or sprocket reduction . Doors to be surface-mounted type with guides at jambs set back a sufficient distance to provide a clear opening when door is in open position. Mount exterior doors on interior face of walls.

2.1.1 Design Requirements

2.1.1.1 Door Detail Shop Drawings

Provide installation drawings for door assemblies which show: elevations of each door type, shape and thickness of materials, finishes, details of

joints and connections, details of guides and fittings, rough opening dimensions, location and description of hardware, anchorage locations, and counterbalancing mechanism and door operator details. Show locations of replaceable fusible links on wiring diagrams for power, signal and controls. Include a schedule showing the location of each door with the drawings.

2.1.2 Performance Requirements

2.1.2.1 Wind Loading

Design and fabricate door assembly to withstand the wind loading pressure of at least plus 11.4 minus 12.7 psf at 9 feet 4 inches wide to 31.6/ minus 35.4 psf at 24 feet 2 inches wide pounds per square foot in accordace with ANSI/DASMA 108. Provide test data showing compliance with ASTM E330/E330M. Sound engineering principles may be used to interpolate or extrapolate test results to door sizes not specifically tested. Ensure that the complete assembly meets or exceeds the requirements of ASCE 7-16.

2.1.2.2 Operational Cycle Life

Design all portions of the door, hardware and operating mechanism that are subject to movement, wear, or stress fatigue to operate through a minimum number of 10 cycles per day. One complete cycle of door operation is defined as when the door is in the closed position, moves to the fully open position, and returns to the closed position.

2.2 COMPONENTS

2.2.1 Overhead Coiling Doors

2.2.1.1 Curtain Materials and Construction

Provide curtain slats fabricated from Grade A steel sheets conforming to ASTM A653/A653M, with the additional requirement of a minimum yield point of 33,000 psi. Provide 18 gauge sheets, Grade 40 steel with galvanized steel zinc coating in conformance with ASTM A653/A653M and ASTM A924/A924M. Provide steel curtain slats containing a minimum of 20 percent recycled content. Submit data identifying percentage of recycled content for steel curtain slats.

Fabricate doors from interlocking cold-rolled slats, with section profiles as specified, designed to withstand the specified wind loading. Ensure the provided slats are continuous without splices for the width of the door.

Provide slats filled with manufacturer's standard thermal insulation, complying with the maximum flame-spread and smoke-developed indexes of 75 and 450, respectively, according to ASTM E84. Enclose the insulation completely within the slat faces on the interior surface of the slats.

2.2.1.2 Insulated Curtains

Form curtains from manufacturer's standard shapes of interlocking slats. Supply a slat system with a minimum R-value of 4 when calculated in accordance with ASHRAE FUN IP. Slats to consist of a polystyrene core not less than 11/16 inch thick, completely enclosed within metal facings. Slat steel thickness as required by the size of the door to meet specified

performance requirements. The insulated slat assembly requires a flame spread rating of not more than 25 and a smoke development factor of not more than 50 when tested in accordance with ASTM E84.

2.2.1.3 Curtain Bottom Bar

Install curtain bottom bars as pairs of angles or using extrusions from the manufacturer's standard steel, stainless and aluminum extrusions not less than 2.0 by 2.0 inches by 0.188 inch. Do not use aluminum on doors more than 16 feet wide. Ensure steel extrusions conform to ASTM A36/A36M. Stainless steel extrusions conforming to ASTM A666, Type 304. Aluminum extrusions conforming to ASTM B221. Galvanize angles and fasteners in accordance with ASTM A653/A653M and ASTM A924/A924M. Coat welds and abrasions with paint conforming to ASTM A780/A780M.

Provide two minimum 2 inch by 2 inch by 1/8 inch structural steel angles.

2.2.1.4 Endlocks (and Windlocks)

Provide endlocks of Grade B cast steel conforming to ASTM A47/A47M, galvanized in accordance with ASTM A153/A153M. Secure locks at every other curtain slat.

2.2.1.5 Weather Stripping

Provide a hood baffle inside the hood that is a minimum 1/16 inch thick sheet of vinyl, neoprene rubber or equivalent. Provide guide weather stripping that is a minimum 1/16 inch thick sheet of vinyl, neoprene rubber, or equivalent.

Provide bottom bar weather-stripping that is a minimum 1/16 inch thick sheet of vinyl, neoprene rubber, or equivalent.

2.2.1.6 Locking Devices

Ensure that the slide bolt engages through slots in tracks for locking by padlock, located on both left and right jamb sides, operable from coil side.

Provide a locking device assembly which includes cylinder lock, operating handle, cam plate, and adjustable locking bars to engage through slots in tracks.

Provide a chain lock keeper suitable for a standard padlock.

2.2.1.7 Safety Interlock

Equip power-operated doors with a safety interlock switch to disengage power supply when the door is locked, or provide an operator with an internal lock sensing device to prevent the door opening when the door is locked.

2.2.2 Hardware

Ensure that all hardware conforms to ASTM A153/A153M, ASTM A307, and ASTM F568M.

2.2.2.1 Guides

Fabricate curtain jamb guides from the manufacturer's standard angles or channels of same material and finish as curtain slats unless otherwise indicated. Provide guides with sufficient depth or incorporate a steel locking bar to retain the curtain in place under the wind pressure specified. Ensure curtain operates smoothly. Slot bolt holes for track adjustment. Securely attach guides to adjoining construction with not less than 3/8 inch diameter bolts, spaced near each end and not over 30 inches apart.

Ensure guides are roll-formed steel channel bolted to angle or structural grade, three angle assembly of steel to form a slot of sufficient depth to retain curtains in guides to achieve 20 psf windload standard. Guides may be provided with integral windlock bars and removable bottom bar stops.

Fabricate with structural steel angles. Provide windlock bars of same material when windlocks are required to meet specified wind load. Flare the top of inner and outer guide angles outwards to form bellmouth for smooth entry of curtain into guides. Provide removable guide stoppers to prevent over travel of curtain and bottom bar.

2.2.2.2 Hood

Provide a hood with a minimum 24-gauge sheet metal, flanged at top for attachment to header and flanged at bottom to provide longitudinal stiffness. The hood encloses the curtain coil and counterbalance mechanism.

Hoods for openings more than 12 feet in width must have intermediate support brackets to prevent excessive sag. Provide a weather baffle at the lintel or inside the hood of each exterior door.

2.2.3 Counterbalancing Mechanism

Counterbalance doors by means of manufacturer's standard mechanism with an adjustable-tension, steel helical torsion spring mounted, around a steel shaft and contained in a spring barrel connected to top of curtain with barrel rings. Use grease-sealed or self-lubricating bearings for rotating members.

2.2.3.1 Brackets

Provide the manufacturer's standard mounting brackets with one located at each end of the counterbalance barrel conforming to ASTM A36/A36M. Provide brackets of hot-rolled steel.

Brackets will be of 3/16 inch minimum thick steel plates, with permanently sealed ball bearings. Designed to enclose ends of coil and provide support of counterbalance pipe at each end.

2.2.3.2 Counterbalance Barrels

Curtain must roll up on a barrel supported at head of opening on brackets and be balanced by a torsion spring system in the barrel. Fabricate spring barrel of manufacturer's standard hot-formed, structural-quality, welded or seamless carbon-steel pipe, conforming to ASTM A53/A53M or equivalent. Ensure the barrel is of sufficient diameter and wall thickness to support rolled-up curtain without distortion of slats. Limit

barrel deflection to not more than 0.03 inch per foot of span under full load.

a. Barrel

Provide steel pipe capable of supporting curtain load with maximum deflection of 0.03 inches per foot of width.

b. Spring Balance

Provide an oil-tempered, heat-treated steel helical torsion spring assembly designed for proper balance of door. Ensure that effort to operate manually operated units does not exceed 25 lbs. At least 80 percent of the door weight must be counterbalanced at any position. Provide wheel for applying and adjusting spring torque.

2.2.3.3 Spring Balance

Install one or more oil-tempered, heat-treated steel helical torsion springs within the barrel, capable of producing sufficient torque to assure easy operation of the door curtain. Provide and size springs to counterbalance weight of curtain, with uniform adjustment accessible from outside barrel. Secure ends of springs to barrel and shaft with cast-steel barrel plugs.

2.2.3.4 Torsion Rod for Counter Balance

Fabricate rod from the manufacturer's standard cold-rolled steel, sized to hold fixed spring ends and carry torsional load.

2.2.4 Manual Door Operators

2.2.4.1 Manual Chain-Hoist Door Operators

Provide door operators which consist of an endless steel hand chain, chain-pocket wheel, guard, and a geared reduction unit of at least a 3 to 1 ratio . Required pull for operation cannot exceed 35 pounds. Chain must extend to within 3 feet of floor.

Provide chain hoists with a mechanism allowing the curtain to be stopped at any point in its upward or downward travel and to remain in that position until moved to the fully open or closed position. Provide hand chains of galvanized steel. Ensure that the yield point of the chain is at least three times the required hand-chain pull.

Provide chain sprocket wheels of cast iron conforming to ASTM A48/A48M.

2.2.5 Surface Finishing

Comply with NAAMM's "Metal Finishes Manual for Architectural and Metal Products" for recommendations for applying and designating finishes. Noticeable variations in the same metal component are not acceptable. Variations in appearance of adjoining components are acceptable if they are within the range of approved samples and are assembled or installed to minimize contrast.

2.2.5.1 Galvanized and Shop-Primed Finish

Surfaces specified must have a zinc coating, a phosphate treatment, and a shop prime coat of rust-inhibitive paint. The galvanized coating must conform to ASTM A653/A653M, coating designation Z275 (G90), for steel sheets, and ASTM A123/A123M for iron and steel products. The weight of coatings for products must be as designated in Table I of ASTM A123/A123M for the thickness of base metal to be coated. The prime coat must be a type especially developed for materials treated by phosphates and adapted to application by dipping or spraying. Repair damaged zinc-coated surfaces by the materials and methods conforming to ASTM A780/A780M and spot prime. At the option of the Contractor, a two-part system including bonderizing, baked-on epoxy primer, and baked-on enamel top coat may be applied to slats and hoods before forming, in lieu of prime coat specified.

2.2.5.2 Baked-Enamel or Powder-Coat Finish

Manufacturer's standard baked-on finish consisting of prime coat and thermosetting topcoat. Comply with the coating manufacturer's written instructions for cleaning, pretreatment, application, and minimum dry film thickness.

PART 3 EXECUTION

3.1 INSTALLATION

Install overhead coiling door assembly, anchors and inserts for guides, brackets, motors, switches, hardware, and other accessories in accordance with approved detail drawings and manufacturer's written instructions. Upon completion of installation, ensure doors are free from all distortion.

Install overhead coiling doors, motors, hoods, and operators at the mounting locations as indicated for each door in the Contract Documents and as required by the manufacturer.

Install overhead coiling doors, switches, and controls along accessible routes in compliance with regulatory requirements for accessibility and as required by the manufacturer.

3.1.1 Field Painted Finish

Ensure field painted steel doors and frames are in accordance with Section 09 90 00 PAINTS AND COATINGS and the manufacturer's written instructions. Protect the weather stripping from paint. Ensure that the finishes are free of scratches or other blemishes.

3.2 ADJUSTING AND CLEANING

3.2.1 Acceptance Provisions

After installation, adjust the hardware and moving parts. Lubricate bearings and sliding parts as recommended by manufacturer to provide smooth operating functions for ease movement, free of warping, twisting, or distortion of the door assembly.

Adjust seals to provide a weather-tight fit around entire perimeter.

Engage a factory-authorized service representative to perform startup service and checks according to the manufacturer's written instructions.

Test the door opening and closing operation when activated by controls system. Adjust controls and safeties. Replace damaged and malfunctioning controls and equipment. Reset the door-closing mechanism after a successful test.

Test and make final adjustment of new doors at no additional cost to the Government.

3.2.1.1 Maintenance and Adjustment

Not more than 90 calendar days after completion and acceptance of the project, examine, lubricate, test, and re-adjust doors as required for proper operation.

3.2.1.2 Cleaning

Clean doors in accordance with manufacturer's approved instructions.

-- End of Section --

SECTION 08 41 13

ALUMINUM-FRAMED ENTRANCES AND STOREFRONTS
08/18, CHG 1: 08/18

PART 1 GENERAL

1.1 REFERENCES

The publications listed below form a part of this specification to the extent referenced. The publications are referred to within the text by the basic designation only.

ALUMINUM ASSOCIATION (AA)

AA DAF45	(2003; Reaffirmed 2009) Designation System for Aluminum Finishes

AMERICAN ARCHITECTURAL MANUFACTURERS ASSOCIATION (AAMA)

AAMA 501	(2015) Methods of Test for Exterior Walls
AAMA 611	(2014) Voluntary Specification for Anodized Architectural Aluminum
AAMA 800	(2016) Voluntary Specifications and Test Methods for Sealants
AAMA 1503	(2009) Voluntary Test Method for Thermal Transmittance and Condensation Resistance of Windows, Doors and Glazed Wall Sections
AAMA 2605	(2020) Voluntary Specification, Performance Requirements and Test Procedures for Superior Performing Organic Coatings on Aluminum Extrusions and Panels

AMERICAN SOCIETY OF CIVIL ENGINEERS (ASCE)

ASCE 7-16	(2017; Errata 2018; Supp 1 2018) Minimum Design Loads and Associated Criteria for Buildings and Other Structures

ASTM INTERNATIONAL (ASTM)

ASTM B221	(2021) Standard Specification for Aluminum and Aluminum-Alloy Extruded Bars, Rods, Wire, Profiles, and Tubes
ASTM E283	(2019) Standard Test Method for Determining the Rate of Air Leakage Through Exterior Windows, Curtain Walls, and Doors Under Specified Pressure Differences Across the Specimen
ASTM E330/E330M	(2014; R 2021) Standard Test Method for Structural Performance of Exterior Windows, Doors, Skylights and Curtain

	Walls by Uniform Static Air Pressure Difference
ASTM E331	(2000; R 2023) Standard Test Method for Water Penetration of Exterior Windows, Skylights, Doors, and Curtain Walls by Uniform Static Air Pressure Difference
ASTM E783	(2002; R 2018) Standard Test Method for Field Measurement of Air Leakage Through Installed Exterior Windows and Doors
ASTM E1105	(2015; R 2023) Standard Test Method for Field Determination of Water Penetration of Installed Exterior Windows, Skylights, Doors, and Curtain Walls, by Uniform or Cyclic Static Air Pressure Difference
ASTM E1424	(2022) Standard Test Method for Determining the Rate of Air Leakage Through Exterior Windows, Curtain Walls, and Doors Under Specified Pressure and Temperature Differences Across the Specimen
ASTM E1996	(2017) Standard Specification for Performance of Exterior Windows, Curtain Walls, Doors, and Impact Protective Systems Impacted by Windborne Debris in Hurricanes
ASTM F1642/F1642M	(2017) Standard Test Method for Glazing and Glazing Systems Subject to Airblast Loadings

BUILDERS HARDWARE MANUFACTURERS ASSOCIATION (BHMA)

ANSI/BHMA A156.4	(2024) Door Controls - Closers
ANSI/BHMA A156.10	(2024) Power Operated Pedestrian Doors

INTERNATIONAL CODE COUNCIL (ICC)

ICC IBC	(2024) International Building Code

U.S. GENERAL SERVICES ADMINISTRATION (GSA)

FS TT-P-645	(Rev C; Notice 1) Primer, Paint, Zinc-Molybdate, Alkyd Type

UL SOLUTIONS (UL)

UL 325	(2017; Reprint Feb 2020) UL Standard for Safety Door, Drapery, Gate, Louver, and Window Operators and Systems

1.2 ADMINISTRATIVE REQUIREMENTS

1.2.1 Pre-Installation Meetings

Conduct a meeting before installation begins to verify the project requirements, substrate conditions, manufacturer's installation instructions, and manufacturer's warranty requirements.

Within 30 days of the Contract Award, submit the following for review and approval by the Contracting Officer:

a. List of product installations

b. Sample warranty

c. Finish and color samples

d. Manufacturer's catalog data

Concurrently submit certified test reports showing compliance with specified performance characteristics and UL 325 for the following:

a. Wind Load (Resistance) in accordance with AAMA 501

b. Deflection in accordance with ASTM F1642/F1642M

c. Condensation Resistance and Thermal Transmittance Performance Requirements in accordance with AAMA 1503

d. Water Infiltration in accordance with ASTM E331

e. Structural Requirements in accordance with ASTM F1642/F1642M

1.3 SUBMITTALS

Government approval is required for submittals with a "G" or "S" classification. Submittals not having a "G" or "S" classification are for information only. When used, a code following the "G" classification identifies the office that will review the submittal for the Government. Submit the following in accordance with Section 01 33 00 SUBMITTAL PROCEDURES:

SD-01 Preconstruction Submittals

Sample Warranty;

List of Product Installations;

SD-02 Shop Drawings

Installation Drawings;

SD-03 Product Data

Manufacturer's Catalog Data;

Finish;

Recycled Content of Aluminum Material; S

SD-04 Samples

Finish and Color Samples;

SD-06 Test Reports

Certified Test Reports;

Deflection

Air Infiltration

Condensation Resistance and Thermal Transmittance

Water Infiltration

SD-08 Manufacturer's Instructions

Manufacturer's Instructions

SD-11 Closeout Submittals

Manufacturer's Product Warranty

1.4 QUALITY CONTROL

1.4.1 Qualifications

1.4.1.1 Installer Qualifications

Provide documentation of the installer's experience in performing the work specified in this section.

Ensure that the installers are specialized in work similar to that required for this project, and that they are acceptable to product manufacturer.

1.4.1.2 Manufacturer Qualifications

Ensure that manufacturers meet the requirements specified in this section and project drawings.

Ensure that the manufacturer is capable of providing field service representation during construction, approving acceptable installers and approving application methods.

1.4.2 Single-Source Responsibility

When aluminum entrances are part of a building enclosure system, that includes storefront framing, windows, a curtain wall system, and related products, provide building enclosure system products from a single-source manufacturer.

Use a single source manufacturer with sole responsibility for providing design, structural engineering, and custom fabrication for door portal systems and for supplying components, materials, and products. Do not use products provided from numerous sources for assembly at the site. Ensure that the following work items and components are fabricated or supplied by

a single source are:

a. Door assemblies to be installed in door portals as specified in Section 08 11 16 ALUMINUM DOORS AND FRAMES.

b. Glazed walls to be constructed around door portals as specified in this Section.

c. Door operating hardware to be installed on or within door portals as specified in Section 08 71 00 DOOR HARDWARE.

d. Glass as specified in Section 08 81 00 GLAZING.

1.5 DELIVERY, STORAGE, AND HANDLING

1.5.1 Ordering

To avoid construction delays, comply with the manufacturer's lead-time requirements and instructions for ordering.

1.5.2 Packing, Shipping, Handling and Unloading

Deliver materials in the manufacturer's original, unopened, undamaged containers with identification labels intact.

1.5.3 Storage and Protection

Store materials in a way that protects them from exposure to harmful weather conditions. Avoid damaging the storefront material and components during handling. Protect storefront material against damage from elements, construction activities, and other hazards before, during, and after storefront installation.

Do not use adhesive papers or sprayed coatings that become firmly bonded when exposed to sunlight. Do not leave coating residue on surfaces.

1.6 PROJECT / SITE CONDITIONS

1.6.1 Field Measurements

Verify actual measurements or openings by taking field measurements before fabrication; record these measurements on shop drawings. To avoid construction delays, coordinate field measurements, and fabrication schedule with construction progress.

1.7 WARRANTY

Provide a written manufacturer's warranty, executed by a company official, warranting against defects in materials and products for 2 years from the date of shipment. Warrant that the door corner construction is for the life of the project. Provide a written installer's warranty, warranting work to be watertight and free from defective materials, defective workmanship, and glass breakage as a result of defective design, and agreeing to replace components that fail within 2 years.

The warranty states the following:

a. Watertight and airtight system installation is completed within specified tolerances.

b. The completed installation remains free of rattles, wind whistles and noise caused by thermal movement and wind pressure.

c. System is structurally sound and free from distortion.

d. Glass and glazing gaskets will not break or "pop" from frames as a result of design, wind load pressure, movement caused by expansion or contraction, or structural loading.

e. Glazing sealants and gaskets remain free of abnormal deterioration or dislocation as a result of sunlight, weather, or oxidation.

Provide written warranty stating that the organic coating finish will not fade more than 10 percent or show chalking, yellowing, peeling, cracking, pitting, corroding or variations in color, or gloss deterioration beyond the manufacturer's descriptive standards for 2 years from the shipment date and agreeing to promptly correct defects.

Provide a written thermal integrity warranty for 2 years from ship date against thermal barrier system failure resulting from the following:

a. Longitudinal and transverse thermal barrier shrinkage.

b. Thermal barrier cracking.

c. Structural failure of the thermal barrier material.

d. Loss of adhesion or loss of prescribed edge pressure on glazing material, resulting in excessive air and water infiltration.

PART 2 PRODUCTS

2.1 SYSTEM DESCRIPTION

Provide aluminum entrances, with glass and glazing, door hardware, and components.

Aluminum entrances include impact resistance entrances; medium stile, 3 1/2 inch vertical face dimension, 1-3/4 inch depth, for interior structural silicone glaze, for high-traffic/impact-resistant applications.

2.1.1 Design Requirements for Aluminum (Entrances and Components)

Provide a door portal system designed to withstand the following loads without breakage, loss, failure of seals, product deterioration, or other defects.

a. Dead and Live Loads: Determined by ASCE 7-16 and calculated in accordance with applicable codes.

b. Seismic Loads: Design and install the system to comply with the seismic requirements for the project location in accordance with Section 1613 of the International Building Code, ICC IBC.

c. Wind Loads: Design and install the system so that the effects of wind load acting inward and outward normal to the plane of the wall are in accordance with ASTM E330/E330M.

d. Thermal Loads And Movement:

(1) Ambient Temperature Range: 120 degrees F

(2) Material Surfaces Range: 180 degrees F

e. Water and Air Resistance: Provide weatherstripping, exterior gaskets, sealants, and other accessories to resist water and air penetration.

f. Impact-Protective Systems Provide an impact-protective system in accordance with ASTM E1996.

2.1.1.1 Material Standard

ASTM B221; 6063-T5 alloy and tempered.

Provide door stile and rail face dimensions of the entrance doors as follows:

Vertical Stile	Top Rail	Bottom Rail
3-1/2 inches	3-1/2 inches	6-1/2 inches

Provide major portions of the door members at 0.125 inches nominal in thickness and glazing molding at 0.050 inches thick.

2.1.1.2 Recycled Content

Provide aluminum framed entrances and storefronts that have a minimum of 20 percent recycled content based upon the aluminum billet used in the original material. Provide data indicating percentage of recycled content of aluminum material.

2.1.1.3 Sealants

Provide either ethylene propylene diene monomer (EPDM) elastomeric extrusions or thermoplastic elastomer glazing gaskets. Structural silicone sealant is required.

Internal Sealants: Provide sealants that according to the manufacturer will remain permanently elastic, tacky, non-drying, non-migrating, and weather tight.

2.1.1.4 Thermal Barrier

Use a rigid, structural thermal barrier to separate all exterior aluminum from interior aluminum. For purposes of this specification, a structural thermal barrier is defined as a system that transfers shear during bending and, therefore, promotes composite action between the exterior and interior extrusions. Do not use a nonstructural thermal barrier. Ensure that the thermal barrier provides a structural connection between the two sides of the door.

2.2 FABRICATION

Provide the following information when submitting fabrication drawings for custom fabrications:

a. Indicate elevations, detailed design, dimensions, member profiles, joint locations, arrangement of units, and member connections.

b. Show the following items:

(1) Details of special shapes.

(2) Reinforcing.

(3) Anchorage system.

(4) Interfacing with building construction.

(5) Provisions for expansion and contraction.

(6) Thermal breaks.

c. Indicate typical glazing details, locations of various types and thickness of glass and internal sealant requirements as recommended by the sealant manufacturer.

d. Clearly indicate locations of exposed fasteners and joints.

e. Clearly show where and how the manufacturer's system deviates from Contract drawings and these specifications.

2.2.1 Entrance System Fabrication

Provide door corner construction consisting of mechanical clip fastening, SIGMA deep penetration plug welds and 1-1/8 inch long fillet welds inside and outside all four corners. Provide a hook-in type exterior glazing stop with EPDM glazing gaskets reinforced with non-stretchable cord. Provide an interior glazing stop that is mechanically fastened to the door member and that incorporates a silicone-compatible spacer used with silicone sealant.

Accurately fit and secure joints and corners. Make joints hairline in appearance. Remove burrs and smooth edges. Prepare components with internal reinforcement for door hardware. Arrange fasteners and attachments so that they are concealed from view.

Separate dissimilar metals with protective coating or pre-formed separators to prevent contact and corrosion.

2.2.2 Shop Assembly

Fabricate and assemble units with joints only at the intersection of aluminum members with hairline joints; rigidly secure these units, and seal them in accordance with the manufacturer's recommendations.

2.2.2.1 Welding

Conceal welds on aluminum members in accordance with AWS recommendations or methods recommended by the manufacturer. Members showing welding bloom or discoloration on finish or material distortion will be rejected by the Contacting Officer.

2.2.3 Finish

Before fabrication, clean the units and give them a AA-M-10-C22-A32 match existing (color) anodized finish in accordance with the requirements of the AA DAF45. The finish thickness is A42, 0.7 mil or greater.

a. Organic Coating (high-performance exterior coating):

(1) Comply with requirements of AAMA 2605.

(2) Clean surfaces and pretreat them with a conversion coating before applying 0.3 mil dry-film thickness of epoxy or acrylic primer according to the recommendations of the finish coat manufacturer.

(3) Apply a finish coat of 70 percent minimum fluoropolymer resin fused to primed surfaces at the temperature recommended by the manufacturer and at a minimum dry film thickness of 1.0 mil.

(4) Use a 2-, 3-, or 4-coat system as required for the color selected.

c. Color Anodized: Conforming to AA-M12C22A 34 and AAMA 611

Select and edit the following items for appropriate finish; delete types that do not apply.

(1) Architectural Class I

(2) Etched, medium matte

(3) dark bronze anodic coating, 0.7 mil minimum thickness

2.2.4 Fabrication Tolerance

Fabricate and assemble units with joints only at intersection of aluminum members with hairline joints; rigidly secure these units, and seal them in accordance with the manufacturer's recommendations.

Fabricate aluminum entrances in accordance with the entrance manufacturer's prescribed tolerances.

2.2.4.1 Material Cuts

Square to 1/32 inch off square, over largest dimension; proportionate amount of 1/32 inch on the two dimensions.

2.2.4.2 Maximum Offset at Consecutive Members

1/64 inch in alignment between two consecutive members in line, end to end.

2.2.4.3 Maximum Offset at Glazing Pocket Corners

1/64 inch between framing members at glazing pocket corners.

2.2.4.4 Joints

Between adjacent members in same assembly: Joints are hairline and square to the adjacent member.

2.2.4.5 Variation

In squaring diagonals for doors and fabricated assemblies: 1/16 inch.

2.2.4.6 Flatness

For doors and fabricated assemblies: plus/minus 1/16 inch of neutral plane.

2.3 MATERIALS

2.3.1 Sealants

Refer to Section 07 92 00 JOINT SEALANTS. Ensure that all sealants conform to AAMA 800.

2.3.2 Glass

Refer to Section 08 81 00 GLAZING.

2.4 ACCESSORIES

2.4.1 Fasteners

Provide stainless steel fasteners in areas where the fasteners are exposed.

Use non-corrosive and compatible fasteners with components being fastened. Do not use exposed fasteners, except where unavoidable for application of hardware.

In areas where fasteners are not exposed, use aluminum, non-magnetic stainless steel, or other materials warranted by the manufacturer.

For exposed locations, provide countersunk Phillips head screws when items with a matching finish are fastened. For concealed locations, provide the manufacturer's standard fasteners.

Provide nuts or washers that have been designed with a means to prevent disengagement; do not deform fastener threads.

2.4.2 Perimeter Anchors

When steel anchors are used, provide insulation between steel material and aluminum material to prevent galvanic action.

2.4.2.1 Inserts and Anchorage Devices

Provide manufacturer's standard formed or fabricated assemblies, steel or aluminum, of shapes, plates, bars, or tubes. Shop-coat steel assemblies after fabrication with an alkyd zinc chromate primer complying with FS TT-P-645.

2.4.3 Standard Entrance Hardware

2.4.3.1 Weatherstripping

Equip meeting stiles on pairs of doors with an adjustable astragal using wool pile with a polymeric fin.

Provide door weatherstripping on a single-acting offset pivot or butt-hung

door and frame (single or pairs) consisting of a thermoplastic elastomer weatherstripping on a tubular shape with a semi-rigid polymeric backing.

Provide sill-sweep strips: Provide an EPDM blade gasket sweep strip in an aluminum extrusion applied to the interior exposed surface of the bottom rail with concealed fasteners. (Provide as necessary to meet specified performance tests.)

2.4.3.2 Threshold

Provide an extruded aluminum threshold, one piece per door opening, with ribbed surface.

2.4.3.3 Offset Pivots

Provide the manufacturer's standard top and bottom pivots with one intermediate offset pivot.

2.4.3.4 Panic Device

Provide the manufacturer's recommended standard panic hardware.

2.4.3.5 Closer

Provide a surface closer in accordance with ANSI/BHMA A156.4.

2.4.3.6 Security Lock or Dead Lock

Provide A/R MS 1850A lock with two A/R 1871 cylinder operated flush bolts.

2.4.3.7 Cylinder(s)/Thumb-turn

Provide the manufacturer's recommended standard.

2.4.3.8 Cylinder Guard

Provide the manufacturer's recommended standard.

PART 3 EXECUTION

3.1 EXAMINATION

3.1.1 Site Verification of Conditions

Verify that the condition of substrate previously installed under other sections is acceptable for product installation in accordance with the manufacturer's instructions.

Verify that openings are sized to receive the storefront system and that the sill plate is level in accordance with the manufacturer's acceptable tolerances.

3.2 PREPARATION

Field-verify dimensions before fabricating components for the door portal assembly.

Coordinate requirements for locations of blockouts for anchorage of door portal columns and other embedded components with Section 03 30 00

CAST-IN-PLACE CONCRETE.

Coordinate the erection of door portal with installation of surrounding glass wall and door assemblies. Ensure that the door portals can provide support and anchorage for assembly components.

Coordinate electrical requirements for to ensure proper power source, conduit, wiring, and boxes.

3.2.1 Adjacent Surfaces Protection

Protect adjacent work areas and finish surfaces from damage during product installation.

3.2.2 Aluminum Surface Protection

Protect aluminum surfaces from contact with lime, mortar, cement, acids, and other harmful contaminants.

3.3 INSTALLATION

Submit installation drawings for review and approval.

Install the entrance system in accordance with the manufacturer's instructions and the AAMA storefront and entrance guide specifications manual. Attach the entrance system to the structure, allowing it to be adjusted to accommodate construction tolerances and other irregularities. Provide alignment attachments and shims to permanently fasten the system to the building structure. Align the assembly so that it is plumb and level, and free of warp and twist. Maintain assembly dimensional tolerances aligning with adjacent work.

Set thresholds in a bed of mastic and secure the thresholds. Protect aluminum members in contact with masonry, steel, concrete, or dissimilar materials using nylon pads or a bituminous coating. Shim and brace the aluminum system before anchoring the system to the structure. Verify that weep holes are open, and the metal joints are sealed in accordance with the manufacturer's installation instructions. Seal metal-to-metal joints using a sealant recommended by the system manufacturer.

3.3.1 Tolerances

Ensure that tolerances for wall thickness and other cross-sectional dimensions of entrance members are nominal and in compliance with Aluminum Standards and Data, published by the Aluminum Association.

3.3.2 Adjusting

Adjust operating hardware for smooth operation, and as recommended by the manufacturer.

3.3.3 Related Products Installation Requirements

3.3.3.1 Sealants (Perimeter)

Refer to Section 07 92 00 JOINT SEALANTS.

3.3.3.2 Glass

Refer to Section 08 81 00 GLAZING.

3.4 FIELD QUALITY CONTROL

3.4.1 Air Infiltration

Test air infiltration in accordance with ASTM E783

Submit certified test reports showing compliance with specified performance characteristics as follows:

a. For single-acting offset pivot, butt hung, or continuous geared hinge entrances in the closed and locked position, test the specimen in accordance with ANSI/BHMA A156.10, and ASTM E283 at a pressure differential of 1.57 psf for pairs of doors; ensure that maximum infiltration for a pair of 7 foot by 8 foot entrance doors and frame is 1.2 cfm/square foot.

b. Ensure the maximum allowable infiltration for a completed storefront system does not exceed 0.06 cfm/square foot when tested in accordance with ASTM E1424 at a differential static pressure of 6.24 psf.

3.4.2 Wind Loads

Provide a completed storefront system capable of withstanding wind pressure loads, normal to the wall plane indicated, as follows:

a. Exterior Walls

(1) Positive Pressure: 25 psf

(2) Negative Pressure: 25 psf

b. Interior Walls: (pressure acting in either direction) 5 psf

3.4.3 Deflection

Submit certified test reports showing that the maximum allowable deflection in a member when tested in accordance with ASTM E330/E330M with allowable stress is L/175 or 3/4 inches maximum.

3.4.4 Condensation Resistance and Thermal Transmittance

Submit certified test reports showing compliance with specified performance characteristics as follows:

a. U-Value Requirements:

(1) Perform test in accordance with the AAMA 1503 procedure and on the configuration specified therein.

(2) Thermal Transmittance ("U" Value) maximum 0.65 (6250) BTU/hr/sf/deg F at 15 mph exterior wind.

b. CRF Class Requirements:

(1) Perform a test in accordance with AAMA 1503.

(2) Condensation Resistance Factor Requirements (CRF) minimum 57.

3.4.5 Water Infiltration

Submit certified test reports showing that the system is designed to provide no uncontrolled water when tested in accordance with ASTM E1105 at a static pressure of 8 psf.

3.5 ADJUSTING AND CLEANING

3.5.1 Protection

Protect the installed product's finish surfaces from damage during construction. Protect the aluminum storefront system from damage from grinding and polishing compounds, plaster, lime, acid, cement, or other harmful contaminants.

3.5.2 Cleaning

Repair or replace damaged installed products. Clean installed products in accordance with manufacturer's instructions before acceptance remove excess mastic, mastic smears, and other foreign materials. Remove construction debris from the project site and legally dispose of this debris.

3.6 WARRANTY

Submit three signed copies of the manufacturer's product warranty for the entrance system as follows:

a. Warranty Period: Five years from Date of Substantial Completion of the project, provided that the Limited Warranty begins no later than 6 months from the date of shipment by the manufacturer. In addition, support welded door corner construction with a limited lifetime warranty for the life of the door under normal use.

Ensure that the Warranty's language is identical to the "As Approved" version of the sample warranty submitted to and returned from the Contracting Officer.

-- End of Section --

P2# 519087 - DSSC DLA Repair Building 27
Columbus, OH

SECTION 08 51 13

ALUMINUM WINDOWS
05/19

PART 1 GENERAL

1.1 REFERENCES

The publications listed below form a part of this specification to the extent referenced. The publications are referred to within the text by the basic designation only.

ALUMINUM ASSOCIATION (AA)

AA DAF45	(2003; Reaffirmed 2009) Designation System for Aluminum Finishes

AMERICAN ARCHITECTURAL MANUFACTURERS ASSOCIATION (AAMA)

AAMA 611	(2014) Voluntary Specification for Anodized Architectural Aluminum
AAMA 701/702	(2011) Voluntary Specification for Pile Weatherstripping and Replaceable Fenestration Weatherseals
AAMA 907	(2015) Voluntary Specification for Corrosion Resistant Coatings on Carbon Steel Components Used in Windows, Doors and Skylights
AAMA 1503	(2009) Voluntary Test Method for Thermal Transmittance and Condensation Resistance of Windows, Doors and Glazed Wall Sections
AAMA 2603	(2020) Voluntary Specification, Performance Requirements and Test Procedures for Pigmented Organic Coatings on Aluminum Extrusions and Panels
AAMA/WDMA/CSA 101/I.S.2/A440	(2017) North American Fenestration Standard/Specification for Windows, Doors, and Skylights

AMERICAN SOCIETY OF HEATING, REFRIGERATING AND AIR-CONDITIONING ENGINEERS (ASHRAE)

ASHRAE 169	(2021) Climate Data for Building Design Standards

ASTM INTERNATIONAL (ASTM)

ASTM A276/A276M	(2024) Standard Specification for Stainless Steel Bars and Shapes
ASTM E1300	(2024) Standard Practice for Determining Load Resistance of Glass in Buildings

ASTM F588	(2017) Standard Test Methods for Measuring the Forced Entry Resistance of Window Assemblies, Excluding Glazing Impact
ASTM F2248	(2012) Standard Practice for Specifying an Equivalent 3-Second Duration Design Loading for Blast Resistant Glazing Fabricated with Laminated Glass

INTERNATIONAL WINDOW CLEANING ASSOCIATION (IWCA)

IWCA I-14.1	(2001) Window Cleaning Safety Standard

NATIONAL FENESTRATION RATING COUNCIL (NFRC)

NFRC 100	(2020) Procedure for Determining Fenestration Product U-Factors
NFRC 200	(2020) Procedure for Determining Fenestration Product Solar Heat Gain Coefficient and Visible Transmittance at Normal Incidence

NATIONAL FIRE PROTECTION ASSOCIATION (NFPA)

NFPA 101	(2024) Life Safety Code

U.S. DEPARTMENT OF ENERGY (DOE)

Energy Star	(1992; R 2006) Energy Star Energy Efficiency Labeling System (FEMP)

1.2 SUBMITTALS

Government approval is required for submittals with a "G" or "S" classification. Submittals not having a "G" or "S" classification are for Contractor Quality Control approval. Submittals not having a "G" or "S" classification are for information only. When used, a code following the "G" classification identifies the office that will review the submittal for the Government. Submit the following in accordance with Section 01 33 00 SUBMITTAL PROCEDURES:

SD-02 Shop Drawings

Windows;

Fabrication Drawings

SD-03 Product Data

Windows;

Hardware;

Fasteners;

Window Performance;

Thermal-Barrier Windows;

Mullions;

Window Cleaners' Bolts;

Screens;

Weatherstripping;

Accessories;

Adhesives

Thermal Performance;

Energy Star Label For Residential Aluminum Window Products; S

SD-04 Samples

Finish Sample

Window Sample

SD-05 Design Data

Structural Calculations for Deflection;

Design Analysis;

SD-06 Test Reports

Minimum Condensation Resistance Factor

SD-07 Certificates

Engineer's Qualifications

SD-10 Operation and Maintenance Data

Windows, Data Package 1;

Submit in accordance with Section 01 78 23 OPERATION AND MAINTENANCE DATA.

Plastic Identification

1.3 QUALITY ASSURANCE

1.3.1 Qualification of Manufacturer

Window manufacturer must specialize in designing and manufacturing the type of aluminum windows specified in this section, and have a minimum of 20 years of documented successful experience. Manufacturer must have the facilities capable of meeting contract requirements, single-source responsibility and warranty.

1.3.2 Shop Drawing Requirements

Take field measurements prior to preparation of drawings and fabrications. Provide drawings that indicate elevations of windows, full-size sections, thickness and gages of metal, fastenings, proposed method of anchoring, size and spacing of anchors, details of construction, method of glazing, details of operating hardware, mullion details, method and materials for weatherstripping, method of attaching screens, material and method of attaching subframes, stools, casings, sills, trim, installation details, and other related items.

1.3.3 Sample Requirements

1.3.3.1 Finish Sample Requirements

Submit color chart of standard factory color coatings when factory-finish color coating is to be provided.

1.3.3.2 Window Sample Requirements

Submit one full-size corner of each window type proposed for use. Where screens or weatherstripping is required, fit sample with such items that are to be used.

1.3.3.3 Mock-Ups

Before fabrication, full-size mock-up of one window unit complete with glass and AAMA certification label for structural purposes and NFRC Temporary and Permanent Label for certification of thermal performance rating will be required for review of window construction and quality of hardware operation.

1.3.4 Design Data Requirements

Submit calculations to substantiate compliance with deflection requirements. A registered Professional Engineer must provide calculations.

Submit design analysis with calculations showing that the design of each different size and type of aluminum window unit and its anchorage to the structure Calculations verifying the structural performance of each window proposed for use, under the given loads, must be prepared and signed by a registered professional engineer. Reflect the window components and anchorage devices to the structure, as determined by the design analysis, in the shop drawings.

1.3.5 Test Report Requirements

Submit test reports for each type of window attesting that identical windows have been tested and meet the requirements specified herein for conformance to AAMA/WDMA/CSA 101/I.S.2/A440 including test size, and minimum condensation resistance factor (CRF).

1.3.6 Certification

Ensure that construction is performed with products that meet or exceed Energy Star criteria, .

Each prime window unit must bear the AAMA Label warranting that the product complies with AAMA/WDMA/CSA 101/I.S.2/A440. Certified test reports attesting that the prime window units meet the requirements of AAMA/WDMA/CSA 101/I.S.2/A440, including test size, will be acceptable in lieu of product labeling.

1.4 DELIVERY AND STORAGE

Deliver windows to project site in an undamaged condition. Use care in handling and hoisting windows during transportation and at the jobsite. Store windows and components out of contact with the ground, under a weathertight covering, so as to prevent bending, warping, or otherwise damaging the windows. Repair damaged windows to an "as new" condition as approved. If windows can not be repaired, provide a new unit.

1.5 PLASTIC IDENTIFICATION

Label plastic products provided to indicate their polymeric composition according to the following list. Where products are not labeled, provide product data indicating polymeric information in Operation and Maintenance Manual.

a. Type 1: Polyethylene Terephthalate (PET, PETE).

b. Type 2: High Density Polyethylene (HDPE).

c. Type 3: Vinyl (Polyvinyl Chloride or PVC).

d. Type 4: Low Density Polyethylene (LDPE).

e. Type 5: Polypropylene (PP).

f. Type 6: Polystyrene (PS).

g. Type 7: Other. Use of this code indicates that the package in question is made with a resin other than the six listed above, or is made of more than one resin listed above, and used in a multi-layer combination.

1.6 PERFORMANCE REQUIREMENTS

1.6.1 Wind Loading Design Pressure

Design window components, including mullions, hardware, and anchors, to withstand a wind-loading design pressure of at least 10 pounds per square foot (psf).

1.7 DRAWINGS

Submit the Fabrication Drawings for aluminum window units showing complete window assembly including hardware, weatherstripping, and subframe assembly details.

1.8 WINDOW PERFORMANCE

Aluminum windows must meet the following performance requirements. Perform testing requirements by an independent testing laboratory or agency.

1.8.1 Structural Performance

Structural test pressures on window units must be for positive load (inward) and negative load (outward). After testing, there will be no glass breakage, permanent damage to fasteners, hardware parts, support arms or actuating mechanisms or any other damage which could cause window to be inoperable. There must be no permanent deformation of any main frame, sash or ventilator member in excess of the requirements established by AAMA/WDMA/CSA 101/I.S.2/A440 for the window types and classification specified in this section.

1.8.2 Air Infiltration

Air infiltration must not exceed the amount established by AAMA/WDMA/CSA 101/I.S.2/A440 for each window type.

1.8.3 Water Penetration

Water penetration must not exceed the amount established by AAMA/WDMA/CSA 101/I.S.2/A440 for each window type.

1.8.4 Thermal Performance

Windows (including frames and glass) will be independently tested and certified with a Solar Heat Gain Coefficient (SHGC) determined according to NFRC 200 procedures and a whole window U-factor determined in accordance with NFRC 100 within the ranges as indicated below according to the ASHRAE 169 Climate Zone of the project location. Provide visual Transmittance (VT) of 0.5 or greater. Submit documentation supporting compliance with Energy Star, FEMP designated, and Passive House qualifications as applicable. Provide proof of Energy Star label for residential aluminum window products.

1.8.4.1 Northern Climate

Windows installed within Climate Zone 6 will have a U-Factor of 0.27 BTU/h·ft^2·degrees F or less and a SHGC of 0.36 or less.

1.8.5 Life Safety Criteria

Provide windows that conform to NFPA 101 Life Safety Code when rescue and/or second means of escape are indicated.

1.9 WARRANTY

Provide Manufacturer's standard performance guarantees or warranties that extend beyond a 1 year period.

PART 2 PRODUCTS

2.1 WINDOWS

Provide prime windows that comply with AAMA/WDMA/CSA 101/I.S.2/A440 and the requirements specified herein. In addition to compliance with AAMA/WDMA/CSA 101/I.S.2/A440, window framing members for each individual light of glass must not deflect to the extent that deflection perpendicular to the glass light exceeds L/175 of the glass edge length when subjected to uniform loads at specified design pressures. Provide

Structural calculations for deflection to substantiate compliance with deflection requirements. Provide windows of types, performance classes, performance grades, combinations, and sizes indicated or specified. Provide aluminum window frames with a minimum recycled content of 20 percent. Provide data identifying percentage of recycled content of aluminum windows. Design windows to accommodate hardware, glass, weatherstripping, screens, and accessories to be furnished. Each window must be a complete factory assembled unit with or without glass installed. Dimensions shown are minimum. Provide windows with insulating glass and thermal break necessary to achieve a minimum Condensation Resistance Factor (CRF) of n/a when tested in accordance with AAMA 1503. Provide manufacturer's standard hardware fabricated from aluminum, stainless steel, carbon steel complying with AAMA 907, or other corrosion-resistant material compatible with adjacent materials; designed to smoothly operate, tightly close, and securely lock windows, and sized to accommodate sash weight and dimensions.

2.1.1 Fixed Windows (F)

Type F- CW30 -.

2.1.2 Forced Entry Resistant Windows

In addition to meeting the requirements of AAMA/WDMA/CSA 101/I.S.2/A440, windows designated for resistance to forced entry must conform to the requirements of ASTM F588.

2.1.3 Glass and Glazing

Materials are specified in Section 08 81 00 GLAZING.

2.1.4 Caulking and Sealing

Are specified in Section 07 92 00 JOINT SEALANTS.

2.1.5 Weatherstripping

AAMA/WDMA/CSA 101/I.S.2/A440. Provide for all ventilating (operable) sash for all windows. Provide woven wool pile weatherstripping 0.210 inch thick, conforming to AAMA 701/702, or polypropylene multifilament fiber weatherstripping installed in an integral weatherstripping groove in the sash or frame, and flexible polyvinylchloride weatherstripping installed in the sill member.

2.1.6 Sash Poles

Seamless aluminum tube, 0.0625 inch minimum wall thickness, one inch diameter, feet long, with cast aluminum hook and protective cover or tip on the lower end. Finish must match windows.

2.2 FABRICATION

Fabrication of window units must comply with AAMA/WDMA/CSA 101/I.S.2/A440.

2.2.1 Provisions for Glazing

Design windows and rabbets suitable for glass thickness shown . Design sash for double glazing and for securing glass with metal beads, or glazing compound.

2.2.2 Fasteners

Use window manufacturer's standard for windows, trim, and accessories. Self-tapping sheet-metal screws are not acceptable for material more than 1/16 inch thick.

2.2.3 Adhesives

Provide joint sealants as specified in Section 07 92 00 JOINT SEALANTS. For interior application of joint sealants, comply with applicable regulations regarding reduced VOC's, and as specified in Section 07 92 00 JOINT SEALANTS.

2.2.4 Drips and Weep Holes

Provide continuous drips over heads of top ventilators. Where fixed windows adjoin ventilators, drips must be continuous across tops of fixed windows. Provide drips and weep holes as required to return water to the outside.

2.2.5 Combination Windows

Windows used in combination must be factory assembled of the same class and grade. Where factory assembly of individual windows into larger units is limited by transportation considerations, prefabricate, match mark, transport, and field assemble.

2.2.6 Mullions and Transom Bars

Provide mullions between multiple window units to resist two times (2X) glazing resistance in accordance with ASTM F2248 and ASTM E1300. Provide mullions with a thermal break. Secure mullions and transom bars to adjoining construction and window units in such a manner as to permit expansion and contraction and to form a weathertight joint. Provide mullion covers on the interior and exterior to completely close exposed joints and recesses between window units and to present a neat appearance.

2.2.7 Accessories

Provide windows complete with necessary hardware, fastenings, clips, fins, anchors, glazing beads, and other appurtenances necessary for complete installation and proper operation.

2.2.7.1 Hardware

AAMA/WDMA/CSA 101/I.S.2/A440. The item, type, and functional characteristics must be the manufacturer's standard for the particular window type. Provide hardware of suitable design and of sufficient strength to perform the function for which it is used. Equip all operating ventilators with a lock or latching device which can be secured from the inside.

2.2.7.2 Fasteners

Provide concealed anchors of the type recommended by the window manufacturer for the specific type of construction. Anchors and fasteners must be compatible with the window and the adjoining construction. Provide a minimum of three anchors for each jamb located approximately 6 inches

from each end and at midpoint.

2.2.7.3 Window-Cleaner Anchors

Provide double head anchors for windows indicated. Anchors must be stainless steel of size and design required for the window type and application, conforming to ASTM A276/A276M. Provide two anchors for each single window and each adjacent fixed glass window unit. Fasten anchors 44 inches above the window sill utilizing appropriate methods for the window type and application in accordance with industry safety standards.

2.2.7.4 Window Anchors

Anchoring devices for installing windows must be made of aluminum, cadmium-plated steel, stainless steel, or zinc-plated steel conforming to AAMA/WDMA/CSA 101/I.S.2/A440.

2.2.8 Finishes

Comply with NAAMM's "Metal Finishes Manual" for applying and designating finishes. Exposed aluminum surfaces must be factory finished with an anodic coating. All windows must have the same finish.

2.2.8.1 Anodic Coating

Clean exposed aluminum surfaces and provide an anodized finish conforming to AA DAF45 and AAMA 611. Finish must be:

b. Architectural Class I (0.7 mil or thicker), designation AA-M10-C22-A44, electrolytically deposited color anodized.

2.2.8.2 Organic Coating

Clean and prime exposed aluminum surfaces. Provide a baked enamel finish in accordance with AAMA 2603 with total dry film thickness not less than 0.8 mil.

2.3 THERMAL-BARRIER WINDOWS

Provide thermal-barrier windows, complete with accessories and fittings, where indicated.

Specify material and construction except as follows:

a. Aluminum alloy must be 6063-T6.

b. Frame construction, including operable sash, must be factory-assembled and factory-sealed inner and outer aluminum completely separated from metal-to-metal contact. Join assembly by a continuous, concealed, low conductance divider housed in an interlocking extrusion of the inner frame. Metal fasteners, straps, or anchors must not bridge the connection between the inner and outer frame.

c. Operating hardware for each sash must consist of spring-loaded nylon cushion blocks and pin locks designed to lock in predetermined locations.

d. Sash must be completely separated from metal-to-metal contact by means of woven-pile weatherstripping, plastic, or elastomeric separation

members.

e. Operating and storm sash must be factory-glazed with the type of glass indicated and of the quality specified in Section 08 81 00 GLAZING.

2.4 MULLIONS

Provide mullions between multiple-window units where indicated.

Provide profiles for mullions and mullion covers, reinforced as required for the specified wind loading, and securely anchored to the adjoining construction. Mullion extrusion will include serrations or pockets to receive weatherstripping, sealant, or tape at the point of contact with each window flange.

Mullion assembly must include aluminum window clamps or brackets screwed or bolted to the mullion and the mullion cover.

Mullion cover must be screw-fastened to the mullion unless otherwise indicated.

Mullion reinforcing members must be fabricated of the materials specified in AAMA/WDMA/CSA 101/I.S.2/A440 and meet the specified design loading.

2.5 WINDOW CLEANERS' BOLTS

Provide window cleaners' bolts for all windows 7 feet or higher above finished grade, except for windows that can be removed and cleaned from the ground or from a lower roof level without the use of an extension ladder. Provide two bolts for each single window unit and each fixed glass unit. Locate bolts 44 inches above the window sill.

Window cleaners' bolts must be double-head type, AISI Series 300 corrosion-resistant steel, size and design complying with IWCA I-14.1. Contact side of the bolts must be ground to fit flat against window jambs. Bolts must be factory- or field-attached before windows are set. Reinforce backs of frames to receive bolts with 1/4 by 6-inch corrosion-resistant steel or aluminum plates bolted or welded to the frames at the factory. Special wall anchors must be provided on frames at the point of bolt attachment.

PART 3 EXECUTION

3.1 INSTALLATION

3.1.1 Method of Installation

Install in accordance with the window manufacturer's printed instructions and details. Build in windows as the work progresses or install without forcing into prepared window openings. Set windows at proper elevation, location, and reveal; plumb, square, level, and in alignment; and brace, strut, and stay properly to prevent distortion and misalignment. Protect ventilators and operating parts against accumulation of dirt and building materials by keeping ventilators tightly closed and locked to frame. Bed screws or bolts in sill members, joints at mullions, contacts of windows with sills, built-in fins, and subframes in mastic sealant of a type recommended by the window manufacturer. Install and caulk windows in a manner that will prevent entrance of water and wind. Fasten insect screens securely in place.

Any materials that show visual evidence of biological growth due to the presence of moisture must not be installed on the building project.

3.1.2 Dissimilar Materials

Where aluminum surfaces are in contact with, or fastened to masonry, concrete, wood, or dissimilar metals, except stainless steel or zinc, protect the aluminum surface from dissimilar materials as recommended in the Appendix to AAMA/WDMA/CSA 101/I.S.2/A440. Do not coat surfaces in contact with sealants after installation with any type of protective material. Do not apply coatings or lacquers to surfaces to which caulking and glazing components must adhere.

3.1.3 Anchors and Fastenings

Make provision for securing units to each other, to masonry, and to other adjoining construction. Windows installed in masonry walls must have head and jamb members designed to recess into masonry wall not less than 7/16 inch.

3.1.4 Adjustments After Installation

After installation of windows and completion of glazing and field painting, adjust all ventilators and hardware to operate smoothly and to provide weathertight sealing when ventilators are closed and locked. Lubricate hardware and operating parts as necessary. Verify that products are properly installed, connected, and adjusted.

3.2 CLEANING

Clean interior and exterior surfaces of window units of mortar, plaster, paint spattering spots, and other foreign matter to present a neat appearance, to prevent fouling of weathering surfaces and weather-stripping, and to prevent interference with the operation of hardware. Replace all stained, discolored, or abraded windows that cannot be restored to their original condition with new windows.

-- End of Section --

P2# 519087 - DSSC DLA Repair Building 27
Columbus, OH

SECTION 08 71 00

DOOR HARDWARE
02/16, CHG 4: 02/22

PART 1 GENERAL

1.1 REFERENCES

The publications listed below form a part of this specification to the extent referenced. The publications are referred to within the text by the basic designation only.

ASTM INTERNATIONAL (ASTM)

ASTM E283	(2019) Standard Test Method for Determining the Rate of Air Leakage Through Exterior Windows, Curtain Walls, and Doors Under Specified Pressure Differences Across the Specimen
ASTM F883	(2013; R 2022) Standard Performance Specification for Padlocks

BUILDERS HARDWARE MANUFACTURERS ASSOCIATION (BHMA)

ANSI/BHMA A156.1	(2021) Butts and Hinges
ANSI/BHMA A156.2	(2022) Bored and Preassembled Locks and Latches
ANSI/BHMA A156.3	(2020) Exit Devices
ANSI/BHMA A156.4	(2024) Door Controls - Closers
ANSI/BHMA A156.6	(2021) Architectural Door Trim
ANSI/BHMA A156.7	(2016) Template Hinge Dimensions
ANSI/BHMA A156.8	(2021) Door Controls - Overhead Stops and Holders
ANSI/BHMA A156.12	(2022) Interconnected Locks & Latches
ANSI/BHMA A156.13	(2022) Mortise Locks & Latches Series 1000
ANSI/BHMA A156.14	(2013) Sliding and Folding Door Hardware
ANSI/BHMA A156.16	(2023) Auxiliary Hardware
ANSI/BHMA A156.18	(2020) Materials and Finishes
ANSI/BHMA A156.21	(2019) Thresholds
ANSI/BHMA A156.22	(2021) Gasketing
ANSI/BHMA A156.29	(2012) Exit Locks, Exit Alarms, Alarms for Exit Devices

NATIONAL FIRE PROTECTION ASSOCIATION (NFPA)

NFPA 72	(2022; ERTA 22-1) National Fire Alarm and Signaling Code
NFPA 80	(2022) Standard for Fire Doors and Other Opening Protectives
NFPA 101	(2024) Life Safety Code
NFPA 252	(2022) Standard Methods of Fire Tests of Door Assemblies

STEEL DOOR INSTITUTE (SDI/DOOR)

SDI/DOOR A250.8	(2023) Specifications for Standard Steel Doors and Frames

U.S. NATIONAL ARCHIVES AND RECORDS ADMINISTRATION (NARA)

36 CFR 1191	Americans with Disabilities Act (ADA) Accessibility Guidelines for Buildings and Facilities; Architectural Barriers Act (ABA) Accessibility Guidelines

UL SOLUTIONS (UL)

UL Bld Mat Dir	(updated continuously online) Building Materials Directory

1.2 SUBMITTALS

Government approval is required for submittals with a "G" or "S" classification. Submittals not having a "G" or "S" classification are for Contractor Quality Control approval. Submittals not having a "G" or "S" classification are for information only. When used, a code following the "G" classification identifies the office that will review the submittal for the Government. Submit the following in accordance with Section 01 33 00 SUBMITTAL PROCEDURES:

SD-02 Shop Drawings

Manufacturer's Detail Drawings;

Verification of Existing Conditions;

Hardware Schedule;

Keying System;

SD-03 Product Data

Hardware Items;

SD-08 Manufacturer's Instructions

Installation

SD-10 Operation and Maintenance Data

Hardware Schedule Items, Data Package 1;

SD-11 Closeout Submittals

Key Bitting

1.3 SHOP DRAWINGS

Submit manufacturer's detail drawings indicating all hardware assembly components and interface with adjacent construction. Indicate power components and wiring coordination for electrified hardware. Base shop drawings on verified field measurements and include verification of existing conditions.

1.4 PRODUCT DATA

Indicate fire-ratings at applicable components. Provide documentation of ABA/ADA accessibility compliance of applicable components, as required by 36 CFR 1191 Appendix D - Technical.

1.5 HARDWARE SCHEDULE

Provide Hardware Item List and Hardware Schedule containing the following information, and additional information as needed to identify the complete make up of each hardware set and its application to each opening:

1.5.1 Hardware Item List:

a. Hardware Type

b. Item Number

c. Quantity

d. Size(s)

e. Reference Publication / Type Number

f. Manufacturer's Name / Catalog Number

g. Key Control Symbols

h. UL Mark (If fire rated and listed)

i. BHMA Finish(es)

j. Remarks

1.5.2 Hardware Schedule

a. Hardware Set Number

b. Opening Number(s)

c. Opening Description (single/double leaf, hand, size, door/frame material)

d. Fire Rating

e. Sound Rating

f. Hardware Items

g. Quantity

h. Size

i. BHMA Finish

j. Remarks

In addition, submit hardware schedule data package 1 in accordance with Section 01 78 23 OPERATION AND MAINTENANCE DATA.

1.6 KEY BITTING CHART REQUIREMENTS

1.6.1 Requirements

Submit key bitting charts to the Contracting Officer prior to completion of the work. Include:

a. Complete listing of all keys (e.g. AA1 and AA2).

b. Complete listing of all key cuts (AA1-123456, AA2-123458).

c. Tabulation showing which key fits which door.

d. Copy of floor plan showing doors and door numbers.

e. Listing of 20 percent more key cuts than are presently required in each master system.

1.7 QUALITY ASSURANCE

1.7.1 Hardware Manufacturers and Modifications

Provide, as far as feasible, locks, hinges, pivots, and closers of one lock, hinge, pivot, or closer manufacturer's make. Modify hardware as necessary to provide features indicated or specified.

1.7.2 Key Shop Drawings Coordination Meeting

Prior to the submission of the key shop drawing, the Contracting Officer, Contractor, Door Hardware Subcontractor, using Activity and Base Locksmith must meet to discuss and coordinate key requirements for the facility.

1.8 DELIVERY, STORAGE, AND HANDLING

Deliver hardware in original individual containers, complete with necessary appurtenances including fasteners and instructions. Mark each individual container with item number as shown on hardware schedule. Deliver permanent keys and removable cores to the Contracting Officer, either directly or by certified mail. Deliver construction master keys with the locks.

PART 2 PRODUCTS

2.1 TEMPLATE HARDWARE

Hardware applied to metal or to prefinished doors must be manufactured using a template. Provide templates to door and frame manufacturers in accordance with ANSI/BHMA A156.7 for template hinges. Coordinate hardware items to prevent interference with other hardware.

2.2 HARDWARE FOR FIRE DOORS AND EXIT DOORS

Provide all hardware necessary to meet the requirements of NFPA 72 for door alarms, NFPA 80 for fire doors, NFPA 101 for exit doors, NFPA 252 for fire tests of door assemblies, ABA/ADA accessibility requirements, and all other requirements indicated, even if such hardware is not specifically mentioned in paragraph HARDWARE SCHEDULE. Provide Underwriters Laboratories, Inc. labels for such hardware in accordance with UL Bld Mat Dir or equivalent labels in accordance with another testing laboratory approved in writing by the Contracting Officer.

2.3 HARDWARE ITEMS

Clearly and permanently mark with the manufacturer's name or trademark, hinges, pivots, locks, latches, exit devices, bolts and closers where the identifying mark is visible after the item is installed. For closers with covers, the name or trademark may be beneath the cover. Coordinate electrified door hardware components with corresponding components specified in Division 28 ELECTRONIC SECURITY SYSTEMS (ESS).

2.3.1 Hinges

Provide in accordance with ANSI/BHMA A156.1. Provide hinges that are 4-1/2 by 4-1/2 inch unless otherwise indicated. Construct loose pin hinges for interior doors and reverse-bevel exterior doors so that pins are non-removable when door is closed. Other anti-friction bearing hinges may be provided in lieu of ball bearing hinges.

2.3.2 Locks and Latches

a. At exterior locations provide locksets of full stainless steel type 302 or 304 construction including fronts, strike, escutcheons, knobs, bolts and all interior working parts. Marine Grade I, fully non-ferrous.

b. In non-air-conditioned interior environments or humid interior environments, provide interior locksets on the same Marine Grade I, fully non-ferrous as exterior locksets.

2.3.2.1 Mortise Locks and Latches

Provide in accordance with ANSI/BHMA A156.13, Series 1000, Operational Grade 1, Security Grade 2. Provide mortise locks with escutcheons not less than 7 by 2-1/4 inch with a bushing at least 1/4 inch long. Cut escutcheons to fit cylinders and provide trim items with straight, beveled, or smoothly rounded sides, corners, and edges. Provide knobs and roses of mortise locks with screwless shanks and no exposed screws.

2.3.2.2 Bored Locks and Latches

Provide in accordance with ANSI/BHMA A156.2, Series 4000, Grade 1.

2.3.2.3 Interconnected Locks and Latches

Provide in accordance with ANSI/BHMA A156.12. Provide F96 or F97, unless otherwise specified.

2.3.3 Exit Devices

Provide in accordance with ANSI/BHMA A156.3, Grade 1. Provide adjustable strikes for rim type and vertical rod devices. Provide open back strikes for pairs of doors with mortise and vertical rod devices. Provide escutcheons not less than 7 by 2-1/4 inch.

Use stainless steel or bronze base metal with plated finishes. Also include stainless steel fasteners and screws.

2.3.4 Exit Locks With Alarm

Provide in accordance with ANSI/BHMA A156.3 and ANSI/BHMA A156.29, Type E0431 (with full width horizontal actuating bar) for single doors; Type E0431 (with actuating bar) or E0471 (with actuating bar and top and bottom bolts, both leaves active) for pairs of doors, unless otherwise specified. Provide door alarms integrated with the fire alarm system in accordance with NFPA 72.

2.3.5 Cylinders and Cores

Provide cylinders and cores for new locks, including locks provided under other sections of this specification. Provide cylinders and cores with same amount of pin tumblers to match existing. Provide cylinders from the products of one manufacturer, and provide cores from the products of one manufacturer. Rim cylinders, mortise cylinders, and knobs of bored locksets have interchangeable cores which are removable by special control keys. Stamp each interchangeable core with a key control symbol in a concealed place on the core.

Provide cylinders for new locks, including locks provided under other sections of this specification. Provide fully compatible cylinders of Grade 1 products from products of one manufacturer with interchangeable cores that are removable by a special control key. Factory set the cores with same amount of pin tumblers as existing using the A4 system and F keyway. Submit a core code sheet with the cores. Provide master keyed cores in one system for this project. Provide construction interchangeable cores.

2.3.6 Keying System

Provide an extension of the existing keying system. Existing locks were manufactured by Best Locks and have interchangeable cores.

2.3.7 Lock Trim

Provide cast, forged, or heavy wrought construction and commercial plain design for lock trim.

2.3.7.1 Knobs and Roses

Provide in accordance with ANSI/BHMA A156.2 and ANSI/BHMA A156.13 for knobs, roses, and escutcheons. For unreinforced knobs, roses, and escutcheons, provide a 0.050 inch thickness. For reinforced knobs, roses, and escutcheons, provide an outer shell thickness of 0.035 inch and a combined total thickness of 0.070 inch, except at knob shanks. Provide knob shanks 0.060 inch thick.

2.3.7.2 Lever Handles

Provide lever handles . Provide in accordance with ANSI/BHMA A156.3 for mortise locks of lever handles for exit devices. Provide lever handle locks with a breakaway feature (such as a weakened spindle or a shear key) to prevent irreparable damage to the lock when force in excess of that specified in ANSI/BHMA A156.13 is applied to the lever handle. Provide lever handles return to within 1/2 inch of the door face.

2.3.8 Keys

Provide one file key, one duplicate key, and one working key for each key change and for each master keying system. Provide one additional working key for each lock of each keyed-alike group. Provide and 3 control keys for removable cores. Stamp each key with appropriate key control symbol and "U.S. property - do not duplicate." Do not place room number on keys.

2.3.9 Door Bolts

Provide in accordance with ANSI/BHMA A156.16. Provide dustproof strikes for bottom bolts, except at doors having metal thresholds. Provide automatic latching flush bolts in accordance with ANSI/BHMA A156.3, Type 25.

2.3.10 Closers

Provide in accordance with ANSI/BHMA A156.4, Series C02000, Grade 1, with PT 4C. Provide with brackets, arms, mounting devices, fasteners, full size covers, except at storefront mounting, pivots, and other features necessary for the particular application. Size closers in accordance with manufacturer's printed recommendations, or provide multi-size closers, Sizes 1 through 6, and list sizes in the Hardware Schedule. Provide manufacturer's 10 year warranty.

Use stainless steel inside bracketed or door mounted closers on exterior doors. Non-ferrous closers, such as aluminum or cast bronze, are permissible where door utilization is minimal. On interior doors use closers of 302 or 304 stainless steel or non-ferrous materials. On surface-mounted closers use or apply rust inhibiting finish on all ferrous parts. Also apply this finish on concealed closers.

2.3.10.1 Identification Marking

Engrave each closer with manufacturer's name or trademark, date of manufacture, and manufacturer's size designation in locations that will

be visible after installation.

2.3.11 Overhead Holders

Provide in accordance with ANSI/BHMA A156.8.

2.3.12 Door Protection Plates

Provide in accordance with ANSI/BHMA A156.6.

2.3.12.1 Sizes of Mop Kick Plates

2 inch less than door width for single doors; 1 inch less than door width for pairs of doors. Provide 10 inch kick plates for flush doors. Provide a minimum 36 inch armor plates for flush doors and completely cover lower panels of panel doors, except 16 inch high armor plates on fire doors. Provide 6 inch mop plates.

2.3.13 Door Stops and Silencers

Provide in accordance with ANSI/BHMA A156.16. Silencers Type L03011. Provide three silencers for each single door, two for each pair.

2.3.14 Padlocks

Provide in accordance with ASTM F883.

2.3.15 Thresholds

Provide in accordance with ANSI/BHMA A156.21. Use J35100, with vinyl or silicone rubber insert in face of stop, for exterior doors opening out, unless specified otherwise.

2.3.16 Weatherstripping Gasketing

Provide in accordance with ANSI/BHMA A156.22. Provide the type and function designation where specified in paragraph HARDWARE SCHEDULE. Provide a set to include head and jamb seals, sweep strips, and, for pairs of doors, astragals. Air leakage of weatherstripped doors not to exceed 0.5 cubic feet per minute of air per square foot of door area when tested in accordance with ASTM E283. Provide weatherstripping with one of the following:

2.3.16.1 Extruded Aluminum Retainers

Extruded aluminum retainers not less than 0.050 inch wall thickness with vinyl, neoprene, silicone rubber, or polyurethane inserts. Provide bronze anodized aluminum.

2.3.16.2 Interlocking Type

Zinc or bronze not less than 0.018 inch thick.

2.3.16.3 Spring Tension Type

Spring bronze or stainless steel not less than 0.008 inch thick.

2.3.17 Lightproofing and Soundproofing Gasketing

Provide in accordance with ANSI/BHMA A156.22. Provide adjustable doorstops at heads,jambs and automatic door bottoms in accordance with the hardware set, of extruded aluminum, bronze anodized, surface applied, with vinyl fin seals between plunger and housing. Provide doorstops with solid neoprene tube, silicone rubber, or closed cell sponge gasket. Provide door bottoms with adjustable operating rod and silicone rubber or closed cell sponge neoprene gasket. Provide doorstops that are mitered at corners. Provide type and function designation where specified in paragraph HARDWARE SETS.

2.3.18 Rain Drips

Provide in accordance with ANSI/BHMA A156.22. Provide extruded aluminum rain drips, not less than 0.08 inch thick, bronze anodized finish. Provide the manufacturer's full range of color choices to the Contracting Officer for color selection. Set drips in sealant and fasten with stainless steel screws.

2.3.18.1 Door Rain Drips

Approximately 1-1/2 inch high by 5/8 inch projection. Align bottom with bottom edge of door.

2.3.18.2 Overhead Rain Drips

Approximately 1-1/2 inch high by 2-1/2 inch projection. Align bottom with door frame rabbet.

2.3.19 Auxiliary Hardware (Other than locks)

Provide in accordance with ANSI/BHMA A156.16, Grade 1.

2.3.20 Sliding and Folding Door Hardware

Provide in accordance with ANSI/BHMA A156.14, Grade 1. Finishes to match other hardware specified herein.

2.3.21 Special Tools

Provide special tools, such as spanner and socket wrenches and dogging keys, as required to service and adjust hardware items.

2.4 FASTENERS

Provide fasteners of type, quality, size, and quantity appropriate to the specific application. Fastener finish to match hardware. Provide stainless steel or nonferrous metal fasteners in locations exposed to weather. Verify metals in contact with one another are compatible and will avoid galvanic corrosion when exposed to weather.

2.5 FINISHES

Provide in accordance with ANSI/BHMA A156.18. Provide hardware in BHMA 630 finish (satin stainless steel), unless specified otherwise. Provide items not manufactured in stainless steel in BHMA 626 finish (satin chromium plated) over brass or bronze, except aluminum paint finish for surface door closers, and except BHMA 652 finish (satin chromium plated)

for steel hinges. Provide hinges for exterior doors in stainless steel with BHMA 630 finish. Furnish exit devices in BHMA 626 finish in lieu of BHMA 630 finish except where BHMA 630 is specified under paragraph HARDWARE SETS. Match exposed parts of concealed closers to lock and door trim. Match hardware finish for aluminum doors to the doors.

PART 3 EXECUTION

3.1 INSTALLATION

Provide hardware in accordance with manufacturers' printed installation instructions. Fasten hardware to wood surfaces with full-threaded wood screws or sheet metal screws. Provide machine screws set in expansion shields for fastening hardware to solid concrete and masonry surfaces. Provide toggle bolts where required for fastening to hollow core construction. Provide through bolts where necessary for satisfactory installation.

3.1.1 Weatherstripping Installation

Provide full contact, weathertight seals that allow operation of doors without binding the weatherstripping.

3.1.1.1 Stop Applied Weatherstripping

Fasten in place with color matched sheet metal screws not more than 9 inch on center after doors and frames have been finish painted.

3.1.1.2 Interlocking Type Weatherstripping

Provide interlocking, self adjusting type on heads and jambs and flexible hook type at sills. Nail weatherstripping to door 1 inch on center and to heads and jambs at 4 inch on center.

3.1.1.3 Spring Tension Type Weatherstripping

Provide spring tension type on heads and jambs. Provide bronze nails with bronze. Provide stainless steel nails with stainless steel. Space nails not more than 1-1/2 inch on center.

3.1.2 Lightproofing and Soundproofing Installation

Provide as specified for stop applied weatherstripping.

3.1.3 Threshold Installation

Extend thresholds the full width of the opening and notch end for jamb stops. Set thresholds in a full bed of sealant and anchor to floor with cadmium-plated, countersunk, steel screws. For aluminum thresholds placed on top of concrete surfaces, coat the underside surfaces that are in contact with the concrete with fluid applied waterproofing as a separation measure prior to placement.

3.2 FIRE DOORS AND EXIT DOORS

Provide hardware in accordance with NFPA 72 for door alarms, NFPA 80 for fire doors, NFPA 101 for exit doors, and NFPA 252 for fire tests of door assemblies.

3.3 HARDWARE LOCATIONS

Provide in accordance with SDI/DOOR A250.8, unless indicated or specified otherwise.

a. Kick and Armor Plates: Push side of single-acting doors. Both sides of double-acting doors.

b. Mop Plates: Bottom flush with bottom of door.

3.4 FIELD QUALITY CONTROL

After installation, protect hardware from paint, stains, blemishes, and other damage until acceptance of work. Submit notice of testing 15 days before scheduled, so that testing can be witnessed by the Contracting Officer. Adjust hinges, locks, latches, bolts, holders, closers, and other items to operate properly. Demonstrate that permanent keys operate respective locks, and give keys to the Contracting Officer. Correct, repair, and finish, errors in cutting and fitting and damage to adjoining work.

3.5 HARDWARE SETS

Provide hardware for new doors under this section. Deliver Hardware templates and hardware, except field applied hardware, to the aluminum door and frame manufacturer for use in fabricating doors and frames.

HARDWARE GROUP NO. 01

Provide each SGL door(s) with the following:

3 Each Hinge	A2112 by 626 by NRP
1 Each Push Bar Panic Device	Type 1-05 by 630 (Match Existing)
1 Each OH Stop	630
1 Each Closer (Match Existing)	C02021
1 Each Kick Plate (Match Existing)	J102 by 630
1 Set Weatherstripping	
3 Each Silencer	Gray

HARDWARE GROUP NO. 02

Provide each SGL door(s) with the following:

3 Each Hinge	A2112 by 626 by NRP
1 Storefront Lock	F86 by 630
1 Cylinder lock	630
1 Each Closer (Match Existing)	C02021
1 Each Kick Plate (Match Existing)	J102 by 630
1 Each Mop Plate (Match Existing)	630
1 Each Wall bumper	L02101
1 Astragal	
3 Each Silencer	

HARDWARE GROUP NO. 03

Provide each SGL door(s) with the following:

3 Each Hinge	A2112 by 630 by NRP
1 Each Push Plate (Match Existing)	J301 by 630
1 Each Pull Plate (Match Existing)	J405 by 630

1 Each Closer (Match Existing)	C02021
1 Each Kick Plate (Match Existing)	J102 by 630
1 Each Mop Plate (Match Existing)	630
1 Each Wall bumper	L02101
3 Each Silencer	Gray

HARDWARE GROUP NO. 04

Provide each SGL door(s) with the following:

1 Each Pivot Set	Finish to match existing
1 Each Push Bar Panic Device	Surface mount finish to match Door
1 Each OH stop	
1 Each Closer	C02021 - Finish match Frame % Door
1 Each Door Sweep	By manufacturer
1 Each ADA Threshold	
1 Each Seal	
1 Each Mortise Cylinder	
1 Each Door Pull	Match Door and Frame

HARDWARE GROUP NO. 05

Provide each SGL door(s) with the following:

1 Each Pivot Set	Finish to match existing
1 Each Push Bar Panic Device	Surface mount finish to match Door
1 Each OH stop	
1 Each Closer	C02021 - Finish match Frame % Door
1 Each Door Pull	Match Door and Frame

-- End of Section --

SECTION 08 81 00

GLAZING
05/19

PART 1 GENERAL

1.1 REFERENCES

The publications listed below form a part of this specification to the extent referenced. The publications are referred to within the text by the basic designation only.

AMERICAN ARCHITECTURAL MANUFACTURERS ASSOCIATION (AAMA)

AAMA 800	(2016) Voluntary Specifications and Test Methods for Sealants

AMERICAN NATIONAL STANDARDS INSTITUTE (ANSI)

ANSI Z97.1	(2015) Safety Glazing Materials Used in Buildings - Safety Performance Specifications and Methods of Test

ASTM INTERNATIONAL (ASTM)

ASTM C509	(2006; R 2021) Standard Specification for Elastomeric Cellular Preformed Gasket and Sealing Material
ASTM C864	(2005; R 2015) Dense Elastomeric Compression Seal Gaskets, Setting Blocks, and Spacers
ASTM C920	(2018) Standard Specification for Elastomeric Joint Sealants
ASTM C1021	(2008; R 2014) Standard Practice for Laboratories Engaged in Testing of Building Sealants
ASTM C1036	(2021) Standard Specification for Flat Glass
ASTM C1087	(2016) Standard Test Method for Determining Compatibility of Liquid-Applied Sealants with Accessories Used in Structural Glazing Systems
ASTM C1172	(2024) Standard Specification for Laminated Architectural Flat Glass
ASTM C1184	(2023) Standard Specification for Structural Silicone Sealants
ASTM C1281	(2016) Standard Specification for Preformed Tape Sealants for Glazing Applications

ASTM D395	(2016; E 2017) Standard Test Methods for Rubber Property - Compression Set
ASTM D2287	(2019) Nonrigid Vinyl Chloride Polymer and Copolymer Molding and Extrusion Compounds
ASTM E1300	(2024) Standard Practice for Determining Load Resistance of Glass in Buildings
ASTM E2190	(2010) Standard Specification for Insulating Glass Unit Performance and Evaluation

GLASS ASSOCIATION OF NORTH AMERICA (GANA)

GANA Glazing Manual	(2008) Glazing Manual
GANA Sealant Manual	(2008) Sealant Manual

INSULATING GLASS MANUFACTURERS ALLIANCE (IGMA)

IGMA TB-1200	(1983; R 2016) Guidelines for Insulating Glass Dimensional Tolerances
IGMA TB-3001	(2001) Guidelines for Sloped Glazing
IGMA TM-3000	(1990; R 2016) North American Glazing Guidelines for Sealed Insulating Glass Units for Commercial & Residential Use

NATIONAL FENESTRATION RATING COUNCIL (NFRC)

NFRC 100	(2020) Procedure for Determining Fenestration Product U-Factors
NFRC 200	(2020) Procedure for Determining Fenestration Product Solar Heat Gain Coefficient and Visible Transmittance at Normal Incidence

U.S. NATIONAL ARCHIVES AND RECORDS ADMINISTRATION (NARA)

16 CFR 1201	Safety Standard for Architectural Glazing Materials

1.2 SUBMITTALS

Government approval is required for submittals with a "G" or "S" classification. Submittals not having a "G" or "S" classification are for information only. When used, a code following the "G" classification identifies the office that will review the submittal for the Government. Submit the following in accordance with Section 01 33 00 SUBMITTAL PROCEDURES:

SD-03 Product Data

Insulating Glass

Plastic Glazing

Glazing Accessories

Sealants

SD-04 Samples

Insulating Glass

Plastic Sheet

Glazing Compound

Glazing Tape

Sealing Tapes

SD-07 Certificates

Insulating Glass

Plastic Glazing

SD-08 Manufacturer's Instructions

Setting and Sealing Materials

Glass Setting

SD-11 Closeout Submittals

Warranty for Insulated Glass Units

1.3 SYSTEM DESCRIPTION

Fabricate and install watertight and airtight glazing systems to withstand thermal movement and wind loading without glass breakage, gasket failure, deterioration of glazing accessories, or defects in the work. Glazed panels must comply with the safety standards, in accordance with ANSI Z97.1, and comply with indicated wind/snow loading in accordance with ASTM E1300.

1.4 QUALITY CONTROL

Submit two 8 by 10 inch samples of each of the following: tinted glass, patterned glass, heat-absorbing glass, and insulating glass units.

Submit three samples of each other material. Samples of plastic sheets must be minimum 5 by 7 inches.

1.5 DELIVERY, STORAGE, AND HANDLING

Deliver products to the site in unopened containers, labeled plainly with manufacturers' names and brands. Store glass and setting materials in safe, enclosed dry locations and do not unpack until needed for installation. Handle and install materials in a manner that will protect them from damage.

1.6 ENVIRONMENTAL REQUIREMENTS

Do not start glazing work until the outdoor temperature is above 40 degrees F and rising, unless procedures recommended by the glass manufacturer and approved by the Contracting Officer are made to warm the glass and rabbet surfaces. Provide ventilation to prevent condensation of moisture on glazing work during installation. Do not perform glazing work during damp or rainy weather.

1.7 WARRANTY

1.7.1 Warranty for Insulated Glass Units

Warranty insulating glass units against development of material obstruction to vision (such as dust, fogging, or film formation on the inner glass surfaces) caused by failure of the hermetic seal, other than through glass breakage, for a 10-year period following acceptance of the work. Provide new units for any units failing to comply with terms of this warranty within 45 working days after receipt of notice from the Government.

1.7.2 Warranty for Polycarbonate Sheet

For a 5-year period following acceptance of the work:

a. Warranty Type I, Class A (UV stabilized) sheets against breakage;

b. Warranty Type III (coated, mar-resistant) sheets against breakage and against coating delamination;

c. Warranty Type IV (coated sheet) against breakage and against yellowing;

d. Warranty extruded polycarbonate profile sheet against breakage.

For a 10-year period following acceptance of the work, warranty Type IV against yellowing and loss of light transmission.

PART 2 PRODUCTS

2.1 PRODUCT SUSTAINABILITY CRITERIA

2.2 GLASS

ASTM C1036, unless specified otherwise. In doors and sidelights, provide safety glazing material conforming to 16 CFR 1201.

2.2.1 Clear Glass

Type I, Class 1 (clear), Quality q5 (B). Provide for glazing openings not indicated or specified otherwise. Use double-strength sheet glass or 1/8 inch float glass for openings up to and including 15 square feet, 3/16 inch for glazing openings over 15 square feet but not over 30 square feet, and 1/4 inch for glazing openings over 30 square feet but not over 45 square feet.

2.2.2 Annealed Glass

Annealed glass must be Type I transparent flat type, Class 1 - clear,

Quality q3 - glazing select, 51 percent light transmittance, .85 percent shading coefficient, conforming to ASTM C1036.

2.2.3 Laminated Glass

ASTM C1172, Laminated glass fabricated from two nominal 1/8 inch pieces of Type I, Class 1, , Quality Q3, flat annealed ; clear glass conforming to ASTM C1036. Flat glass to be laminated together with a minimum of 0.030 inch inch thick, clear polyvinyl butyral laminate, conforming to requirements of 16 CFR 1201 and ASTM C1172. The total thickness of nominally 1/4 inches. Color to be clear . The total thickness of nominally 1/4 inch.

2.3 INSULATING GLASS UNITS

Two panes of glass separated by a dehydrated airspace, filled with argon gas and hermetically sealed, conforming to ASTM E2190. Submit performance and compliance documentation for each type of insulating glass.

Insulated glass units must have a Solar Heat Gain Coefficient (SHGC) maximum of .36 determined according to NFRC 200 and a U-factor maximum of .25 Btu per square foot by hr by degree F in accordance with NFRC 100.

Dimensional tolerances must be as specified in IGMA TB-1200. Spacer must be black, roll-formed, polyurethane and silicon foams, with bent or tightly welded or keyed and sealed joints to completely seal the spacer periphery and eliminate moisture and hydrocarbon vapor transmission into airspace through the corners. Primary seal must be compressed polyisobutylene and the secondary seal must be a specially formulated silicone.

The inner light must be ASTM C1172, clear annealed flat glass Type I, Class I, Quality q3 . The intermediate light must be ASTM C1172, clear annealed flat glass Type I, Class I, Quality q3 . The outer light must be ASTM C1036, Type I, Class 1 (transparent) , , Quality q4, inch thick .

2.4 SETTING AND SEALING MATERIALS

Provide as specified in the GANA Glazing Manual, IGMA TM-3000, IGMA TB-3001, and manufacturer's recommendations, unless specified otherwise herein. Do not use metal sash putty, nonskinning compounds, nonresilient preformed sealers, or impregnated preformed gaskets. Materials exposed to view and unpainted must be gray or neutral color. Sealant testing must be performed by a testing agency qualified according to ASTM C1021.

Submit glass manufacturer's recommendations for setting and sealing materials and for installation of each type of glazing material specified.

2.4.1 Putty and Glazing Compound

Provide glazing compound as recommended by manufacturer for face-glazing metal sash. Putty must be linseed oil type. Do not use putty and glazing compounds with insulating glass or laminated glass.

2.4.2 Glazing Compound

Use for face glazing metal sash. Do not use with insulating glass units

or laminated glass.

2.4.3 Sealants

Provide elastomeric sealants.

2.4.3.1 Elastomeric Sealant

ASTM C920, Type S, Grade NS, Class 12.5, Use G. Use for channel or stop glazing metal sash. Sealants must be chemically compatible with setting blocks, edge blocks, and sealing tapes, with sealants used in manufacture of insulating glass units. Color of sealant must be white.

2.4.3.2 Structural Sealant

ASTM C1184, Type S.

2.4.4 Glazing Tapes

2.4.4.1 Back-Bedding Mastic Glazing Tapes

Preformed, butyl-based, 100 percent solids elastomeric tape; nonstaining and nonmigrating in contact with nonporous surfaces; with or without spacer rod as recommended in writing by tape and glass manufacturers for application indicated; and complying with ASTM C1281 and AAMA 800 for products indicated below:

a. AAMA 804.3 tape, where indicated.

b. AAMA 806.3 tape, for glazing applications in which tape is subject to continuous pressure.

c. AAMA 807.3 tape, for glazing applications in which tape is not subject to continuous pressure.

2.4.4.2 Expanded Cellular Glazing Tapes

Closed-cell, PVC foam tapes; factory coated with adhesive on both surfaces; and complying with AAMA 800 for the following types:

a. AAMA 810.1, Type 1, for glazing applications in which tape acts as the primary sealant.

b. AAMA 810.1, Type 2, for glazing applications in which tape is used in combination with a full bead of liquid sealant.

2.4.5 Sealing Tapes

Preformed, semisolid, PVC-based material of proper size and compressibility for the particular condition, complying with ASTM D2287. Use only where glazing rabbet is designed for tape and tape is recommended by the glass or sealant manufacturer. Provide spacer shims for use with compressible tapes. Tapes must be chemically compatible with the product being set.

2.4.6 Setting Blocks and Edge Blocks

Closed-cell neoprene setting blocks must be dense extruded type conforming to ASTM C509 and ASTM D395, Method B, Shore A durometer between 70 and

90. Edge blocking must be Shore A durometer of 50 (plus or minus 5). Provide silicone setting blocks when blocks are in contact with silicone sealant. Profiles, lengths and locations must be as required and recommended in writing by glass manufacturer. Block color must be black.

2.4.7 Glazing Gaskets

Glazing gaskets must be extruded with continuous integral locking projection designed to engage into metal glass holding members to provide a watertight seal during dynamic loading, building movements and thermal movements. Glazing gaskets for a single glazed opening must be continuous one-piece units with factory-fabricated injection-molded corners free of flashing and burrs. Glazing gaskets must be in lengths or units recommended by manufacturer to ensure against pull-back at corners. Provide glazing gasket profiles as recommended by the manufacturer for the intended application.

2.4.7.1 Fixed Glazing Gaskets

Fixed glazing gaskets must be closed-cell (sponge) smooth extruded compression gaskets of cured elastomeric virgin neoprene compounds conforming to ASTM C509, Type 2, Option 1.

2.4.7.2 Wedge Glazing Gaskets

Wedge glazing gaskets must be high-quality extrusions of cured elastomeric virgin neoprene compounds, ozone resistant, conforming to ASTM C864, Option 1, Shore A durometer between 65 and 75.

2.4.7.3 Aluminum Framing Glazing Gaskets

Glazing gaskets for aluminum framing must be permanent, elastic, non-shrinking, non-migrating, watertight and weathertight.

2.4.8 Accessories

Provide as required for a complete installation, including glazing points, clips, shims, angles, beads, and spacer strips. Provide noncorroding metal accessories. Provide primer-sealers and cleaners as recommended by the glass and sealant manufacturers. Use ASTM C1087 to determine whether priming and other specific joint preparation techniques are required to obtain rapid, optimum adhesion of glazing sealants to surface.

PART 3 EXECUTION

Any materials that show visual evidence of biological growth due to the presence of moisture must not be installed on the building project.

3.1 PREPARATION

Preparation, unless otherwise specified or approved, must conform to applicable recommendations in the GANA Glazing Manual, GANA Sealant Manual, IGMA TB-3001, IGMA TM-3000, and manufacturer's recommendations. Determine the sizes to provide the required edge clearances by measuring the actual opening to receive the glass. Grind smooth in the shop glass edges that will be exposed in finish work. Leave labels in place until the installation is approved, except remove applied labels on heat-absorbing glass and on insulating glass units as soon as glass is installed. Securely fix movable items or keep in a closed and locked position until

glazing compound has thoroughly set.

3.2 GLASS SETTING

Shop glaze or field glaze items to be glazed using glass of the quality and thickness specified or indicated. Glazing, unless otherwise specified or approved, must conform to applicable recommendations in the GANA Glazing Manual, GANA Sealant Manual, IGMA TB-3001, IGMA TM-3000, and manufacturer's recommendations. Aluminum windows, wood doors, and wood windows may be glazed in conformance with one of the glazing methods described in the standards under which they are produced, except that face puttying with no bedding will not be permitted. Handle and install glazing materials in accordance with manufacturer's instructions. Use beads or stops which are furnished with items to be glazed to secure the glass in place. Verify products are properly installed, connected, and adjusted.

3.2.1 Sheet Glass

Cut and set with the visible lines or waves horizontal.

3.2.2 Patterned Glass

Set glass with one patterned surface with smooth surface on the weather side. When used for interior partitions, place the patterned surface in same direction in all openings.

3.2.3 Insulating Glass Units

Do not grind, nip, or cut edges or corners of units after the units have left the factory. Springing, forcing, or twisting of units during setting will not be permitted. Handle units so as not to strike frames or other objects. Installation must conform to applicable recommendations of IGMA TB-3001 and IGMA TM-3000.

3.2.4 Installation of Heat-Absorbing Glass

Provide glass with clean-cut, factory-fabricated edges. Field cutting will not be permitted.

3.2.5 Installation of Laminated Glass

Sashes which are to receive laminated glass must be weeped to the outside to allow water drainage into the channel.

3.3 CLEANING

Clean glass surfaces and remove labels, paint spots, putty, and other defacement as required to prevent staining. Glass must be clean at the time the work is accepted.

3.4 PROTECTION

Protect glass work immediately after installation. Identify glazed openings with suitable warning tapes, cloth or paper flags, attached with non-staining adhesives. Protect reflective glass with a protective material to eliminate any contamination of the reflective coating. Place protective material far enough away from the coated glass to allow air to circulate to reduce heat buildup and moisture accumulation on the glass.

Upon removal, separate protective materials for reuse or recycling. Remove and replace glass units which are broken, chipped, cracked, abraded, or otherwise damaged during construction activities with new units.

3.5 SCHEDULE

Some metric measurements in this section are based on mathematical conversion of inch-pound measurements, and not on metric measurement commonly agreed to by the manufacturers or other parties. The inch-pound and metric measurements are as follows:

PRODUCTS	INCH-POUND	METRIC
Glass	1/8 inch	3 mm
	3/16 inch	4.5 mm
	7/32 inch	6 mm
	1/4 inch	6 mm
	3/8 inch	10 mm
Interlayer	0.015 inch	0.38 mm
Glazing Channels	1/4 inch	6 mm

-- End of Section --

P2# 519087 - DSSC DLA Repair Building 27
Columbus, OH

SECTION 09 06 00

SCHEDULES FOR FINISHES
08/22

PART 1 GENERAL

1.1 SUMMARY

This section covers only the color of exterior and interior materials and products that are exposed to view in the finished construction. The word "color", as used herein, includes surface color and pattern. Requirements for quality, product specifications, and method of installation are covered in other appropriate sections of the specifications. Specific locations where the various materials are required are shown on the drawings if not identified in this specification. Items not designated for color in this section may be specified in other sections. When color is not designated for items, propose a color for approval.

1.2 SUBMITTALS

SD-04 Samples

Contractor Color Boards; G,

1.3 COLOR REFERENCE SYSTEMS

Colors for project finishes are identified in the Color Schedule and based on the Existing facility Colors to be matched. color reference system.

PART 2 PRODUCTS

2.1 CONTRACTOR COLOR BOARDS

Contractor to submit actual color boards to include all finish color samples specified on the project, prior to the submittal and approval of individual finish submittals. The DOR must review and approve the color boards to verify overall building finish coordination and aesthetic. Color boards must be prepared by professional interior designers or architects with significant interior design experience. Qualification of designers is based on education, experience and examination. Interior designers or architects must have completed a program accredited by the Council for Interior Design Accreditation (CIDA) or equal accreditation program of academic training in interior design. In addition, the interior designer or architect must also have attained National Council for Interior Design Qualification (NCIDQ) certification or state licensure, certification or registration and must not be affiliated with a furniture dealership, vendor or manufacturer.

2.2 COLOR SCHEDULE

The color information provided in the following paragraphs lists the colors, patterns and textures for exterior and interior finishes, including both factory applied and field applied colors. In the case of difference between the drawings and specifications, colors identified in this specification govern.

2.3 EXTERIOR FINISHES

2.3.1 Exterior Walls

Exterior wall colors apply to exterior wall surfaces including recesses at entrances and projecting vestibules. When applicable, paint conduit to closely match the adjacent surface color. Provide wall colors to match the colors listed below.

2.3.1.1 Mortar

To match existing.

2.3.1.2 Concrete Masonry Units

2.3.1.3 Insulation and Finish System

2 colors to be picked by the Contracting Officer from selected manufacturer's standard colors during the submittal process.

2.3.1.4 Glass and Glazing

Clear

2.3.1.5 Paint

To match existing colors. Final selections by Contracting Officer from selected manufacturer's standard colors during the submittal process.

2.3.2 Exterior Trim

Provide exterior trim to match the colors listed below.

2.3.2.1 Steel Doors and Door Frames

Paint to match existing.

2.3.2.2 Aluminum Doors and Door Frames

Integral color to match existing.

2.3.2.3 Aluminum Windows (mullion, muntin, sash, trim, and sill)

Integral color to match existing.

2.3.2.4 Downspouts and Gutters

To match existing.

2.3.2.5 Flashings

Match adjacent material in color.

2.3.2.6 Caulking and Sealants

Match adjacent material in color.

2.3.2.7 Signage

To match exisiting.

2.3.2.8 Control Joints

Match adjacent material in color.

2.3.2.9 Expansion Joint and/or Covers

Match adjacent material in color.

2.4 INTERIOR FINISHES

2.4.1 Interior Floor Finishes

Provide flooring materials to match the colors listed below.

2.4.1.1 Porcelain Tile

As selected by the Contracting Officer from the selected manufacturer's standard colors during the submittal process.

2.4.1.2 Ceramic Tile

As selected by the Contracting Officer from the selected manufacturer's standard colors during the submittal process.

2.4.1.3 Grout

As selected by the Contracting Officer from the selected manufacturer's standard colors during the submittal process.

2.4.1.4 Quartz Transition

As selected by the Contracting Officer from the selected manufacturer's standard colors during the submittal process.

2.4.2 Interior Base Finishes

Provide base materials to match the colors listed below.

2.4.2.1 Resilient Base and Moldings

As selected by the Contracting Officer from the selected manufacturer's standard colors during the submittal process. Final color to match existing.

2.4.2.2 Porcelain Tile

As selected by the Contracting Officer from the selected manufacturer's standard colors during the submittal process.

2.4.2.3 Grout

As selected by the Contracting Officer from the selected manufacturer's standard colors during the submittal process.

2.4.2.4 Integral Cove Base

As selected by the Contracting Officer from the selected manufacturer's standard colors during the submittal process.

2.4.2.5 Brick

2.4.2.6 Mortar

As selected by the Contracting Officer from the selected manufacturer's standard colors during the submittal process. Final color to match existing adjacent color.

2.4.2.7 Paint

As selected by the Contracting Officer from the selected manufacturer's standard colors during the submittal process. Final color to match existing adjacent color.

2.4.3 Interior Wall Finishes

Apply interior wall color to the entire wall surface, including reveals, vertical furred spaces and columns, grilles, diffusers, electrical and access panels, and piping and conduit adjacent to wall surfaces unless otherwise specified. Paint items not specified in other paragraphs to match adjacent wall surface. Provide wall materials to match the colors listed below.

2.4.3.1 Paint

As selected by the Contracting Officer from the selected manufacturer's standard colors during the submittal process. Final color to match existing adjacent color.

2.4.4 Interior Ceiling Finishes

Apply ceiling colors to ceiling surfaces including soffits, furred down areas, grilles, diffusers, registers, and access panels. In addition, apply ceiling color to joists, underside of roof deck, and conduit and piping where joists and deck are exposed and required to be painted. Provide ceiling materials to match the colors listed below.

2.4.4.1 Acoustical Tile and Grid

Manufacturers Standard Color

2.4.4.2 Paint (Ceilings)

As selected by the Contracting Officer from the selected manufacturer's standard colors during the submittal process. Final color to match existing adjacent color.

2.4.4.3 Paint (Soffits)

As selected by the Contracting Officer from the selected manufacturer's standard colors during the submittal process. Final color to match existing adjacent color.

2.4.5 Interior Trim

Provide interior trim to match the colors listed below.

2.4.5.1 Steel Doors

As selected by the Contracting Officer from the selected manufacturer's standard colors during the submittal process. Final color to match existing Steel Doors.

2.4.5.2 Steel Door Frames

As selected by the Contracting Officer from the selected manufacturer's standard colors during the submittal process. Final color to match existing Steel Door Frames.

2.4.5.3 Aluminum Doors and Door Frames

As selected by the Contracting Officer from the selected manufacturer's standard colors during the submittal process. Final color to match existing exterior Aluminum Doors and Windows.

2.4.5.4 Aluminum Windows (mullion, muntin, sash, trim, and stool)

As selected by the Contracting Officer from the selected manufacturer's standard colors during the submittal process. Final color to match existing windows.

2.4.5.5 Exposed Ductwork

As selected by the Contracting Officer.

2.4.6 Interior Miscellaneous

Provide miscellaneous items to match the colors listed below.

2.4.6.1 Solid Surfacing Material

As selected by the Contracting Officer.

2.4.6.2 Signage Message Color

As selected by the Contracting Officer.

2.4.6.3 Signage Background Color

To match existing as selected by the Contracting Officer.

2.4.6.4 Lockers

As selected by the Contracting Officer.

2.4.6.5 Benches

As selected by the Contracting Officer.

2.4.6.6 Wall Switch Handles and Standard Receptacle Bodies

To match existing.

2.4.6.7 Electrical Device Cover Plates

To match existing.

2.4.6.8 Electrical Panels

To match existing.

PART 3 EXECUTION

Not Used

-- End of Section --

SECTION 09 29 00

GYPSUM BOARD
08/24

PART 1 GENERAL

1.1 REFERENCES

The publications listed below form a part of this specification to the extent referenced. The publications are referred to within the text by the basic designation only.

ASTM INTERNATIONAL (ASTM)

ASTM A653/A653M	(2023) Standard Specification for Steel Sheet, Zinc-Coated (Galvanized) or Zinc-Iron Alloy-Coated (Galvannealed) by the Hot-Dip Process
ASTM C475/C475M	(2017; R 2022) Standard Specification for Joint Compound and Joint Tape for Finishing Gypsum Board
ASTM C514	(2004; R 2020) Standard Specification for Nails for the Application of Gypsum Board
ASTM C557	(2003; R 2017) Standard Specification for Adhesives for Fastening Gypsum Wallboard to Wood Framing
ASTM C840	(2023) Standard Specification for Application and Finishing of Gypsum Board
ASTM C954	(2022) Standard Specification for Steel Drill Screws for the Application of Gypsum Panel Products or Metal Plaster Bases to Steel Studs from 0.033 in. (0.84 mm) to 0.112 in. (2.84 mm) in Thickness
ASTM C1002	(2022) Standard Specification for Steel Self-Piercing Tapping Screws for the Application of Gypsum Panel Products or Metal Plaster Bases to Wood Studs or Steel Studs
ASTM C1047	(2019) Standard Specification for Accessories for Gypsum Wallboard and Gypsum Veneer Base
ASTM C1396/C1396M	(2017) Standard Specification for Gypsum Board
ASTM D226/D226M	(2017) Standard Specification for Asphalt-Saturated Organic Felt Used in Roofing and Waterproofing

CALIFORNIA DEPARTMENT OF PUBLIC HEALTH (CDPH)

CDPH SECTION 01350	(2017; Version 1.2) Standard Method for the Testing and Evaluation of Volatile Organic Chemical Emissions from Indoor Sources using Environmental Chambers

GREEN SEAL (GS)

GS-36	(2013) Adhesives for Commercial Use

GYPSUM ASSOCIATION (GA)

GA 214	(2010) Recommended Levels of Gypsum Board Finish
GA 216	(2016) Application and Finishing of Gypsum Panel Products

SCIENTIFIC CERTIFICATION SYSTEMS (SCS)

SCS	SCS Global Services (SCS) Indoor Advantage

SOUTH COAST AIR QUALITY MANAGEMENT DISTRICT (SCAQMD)

SCAQMD Rule 1168	(2022) Adhesive and Sealant Applications

UL SOLUTIONS (UL)

UL 2818	(2022) GREENGUARD Certification Program For Chemical Emissions For Building Materials, Finishes And Furnishings

1.2 SUBMITTALS

Government approval is required for submittals with a "G" or "S" classification. Submittals not having a "G" or "S" classification are for information only. When used, a code following the "G" classification identifies the office that will review the submittal for the Government. Submit the following in accordance with Section 01 33 00 SUBMITTAL PROCEDURES:

SD-02 Shop Drawings

Control Joint Shop Drawings

SD-03 Product Data

Gypsum Board

Glass Mat Moisture-Resistant Gypsum Tile Backing Board

Moisture- and Mold-Resistant Gypsum Backing Board

Glass Mat Covered or Reinforced Gypsum Sheathing

Glass Mat Covered or Reinforced Gypsum Sheathing Sealant

Accessories

VOC Content of Joint Compound; S

SD-04 Samples

SD-06 Test Reports

SD-07 Certificates

Asbestos Free Materials; G,

Indoor Air Quality for Gypsum Board; S

Indoor Air Quality for Non-aerosol Adhesives; S

Indoor Air Quality for Aerosol Adhesives; S

1.3 CERTIFICATIONS

1.3.1 Indoor Air Quality Certifications

Submit required indoor air quality certifications in one submittal package.

1.3.1.1 Ceiling and Wall Systems

Provide products certified to meet indoor air quality requirements by UL 2818 (Greenguard) Gold, SCS Global Services Indoor Advantage Gold or provide certification or validation by other third-party program that products meet the requirements of this Section. Provide current product certification documentation from certification body. When product does not have certification, provide validation that product meets the indoor air quality product requirements cited herein.

1.3.1.2 Adhesives and Sealants

Provide products certified to meet indoor air quality requirements by UL 2818 (Greenguard) Gold, SCS Global Services Indoor Advantage Gold or provide certification or validation by other third-party program that products meet the requirements of this Section. Provide adhesive products certified to meet ASTM C557. Provide current product certification documentation from certification body. When product does not have certification, provide validation that product meets the indoor air quality product requirements cited herein.

1.4 DELIVERY, STORAGE, AND HANDLING

1.4.1 Delivery

Deliver materials in the original packages, containers, or bundles with each bearing the brand name, applicable standard designation, and name of manufacturer, or supplier.

1.4.2 Storage

Keep materials dry by storing inside a sheltered building. Where necessary to store gypsum board, glass mat faced gypsum board, and cementitious backer units outside, store flat and off the ground, properly supported on a level platform, and protected from direct exposure to rain, snow, sunlight, and other extreme weather conditions. Provide adequate

ventilation to prevent condensation. Remove plastic wrapping that may inhibit ventilation. Store per manufacturer's recommendations for allowable temperature and humidity range. Do not store panels where temperatures may exceed 125 deg F. Do not store panels near materials that may offgas or emit harmful fumes, such as kerosene heaters, fresh paint, or adhesives. Do not use materials that have visible moisture or biological growth. Do not stack panels higher than manufacturer's recommendations, and no higher than 17 feet.

1.4.3 Handling

Neatly stack gypsum board, glass mat faced gypsum board, and cementitious backer units flat to prevent sagging or damage to the edges, ends, and surfaces. Handle per manufacturer's recommendations.

1.5 QUALIFICATIONS

Furnish type of gypsum board work specialized by the installer with a minimum of 3 years of documented successful experience.

1.6 ENVIRONMENTAL REQUIREMENTS

Do not expose the gypsum board to excessive sunlight prior to gypsum board application. Maintain a continuous uniform temperature of not less than 50 degrees F and not more than 80 degrees F for at least one week prior to the application of gypsum board work, while the gypsum board application is being done, and for at least one week after the gypsum board is set. Shield air supply and distribution devices to prevent any uneven flow of air across the plastered surfaces. Provide ventilation to exhaust moist air to the outside during gypsum board application, set, and until gypsum board jointing is dry. In glazed areas, keep windows open top and bottom or side to side 3 to 4 inches. Reduce openings in cold weather to prevent freezing of joint compound when applied. For enclosed areas lacking natural ventilation, provide temporary mechanical means for ventilation. In unglazed areas subjected to hot, dry winds or temperature differentials from day to night of 20 degrees F or more, screen openings with cheesecloth or similar materials. Avoid rapid drying. During periods of low indoor humidity, provide minimum air circulation following gypsum boarding and until gypsum board jointing complete and is dry.

PART 2 PRODUCTS

2.1 MATERIALS

Conform to specifications, standards and requirements specified. Provide gypsum board types, gypsum backing board types, cementitious backing units, and joint treating materials manufactured from asbestos free materials only.

2.1.1 Gypsum Board

ASTM C1396/C1396M. Gypsum Board must not contain asbestos. Provide gypsum wall board and panels meeting the emissions requirements of CDPH SECTION 01350 (limit requirements for either office or classroom spaces regardless of space type). Provide certification or validation of indoor air quality for gypsum board.

2.1.1.1 Regular

48 inch wide, 5/8 inch thick, tapered edges. Provide tapered and featured edge gypsum board as indicated.

2.1.1.2 Type X (Special Fire-Resistant)

48 inch wide, 5/8 inch thick, tapered edges.

2.1.2 Joint Treatment Materials

ASTM C475/C475M. Product must be low emitting VOC types with VOC limits not exceeding 50 g/L. Joint materials must not contain asbestos. Provide data identifying VOC content of joint compound. Use all purpose joint and texturing compound containing inert fillers and natural binders, including lime compound. Pre-mixed compounds must be free of antifreeze, vinyl adhesives, preservatives, biocides and other slow releasing compounds.

2.1.2.1 Embedding Compound

Specifically formulated and manufactured for use in embedding tape at gypsum board joints and compatible with tape, substrate and fasteners.

2.1.2.2 Finishing or Topping Compound

Specifically formulated and manufactured for use as a finishing compound.

2.1.2.3 All-Purpose Compound

Specifically formulated and manufactured to serve as both a taping and a finishing compound and compatible with tape, substrate, and fasteners.

2.1.2.4 Setting or Hardening Type Compound

Specifically formulated and manufactured for use with fiber glass mesh tape.

2.1.2.5 Joint Tape

Use cross-laminated, tapered edge, reinforced paper, or fiber glass mesh tape recommended by the manufacturer.

2.1.3 Fasteners

2.1.3.1 Nails

ASTM C514.

2.1.3.2 Screws

ASTM C1002, Type "G", Type "S", or Type "W" steel drill screws for fastening gypsum board to gypsum board, wood framing members, and steel framing members less than 0.033 inch thick. ASTM C954 steel drill screws for fastening gypsum board to steel framing members 0.033 to 0.112 inch thick. Provide cementitious backer unit screws with a polymer coating.

2.1.3.3 Staples

No. 16 USS gage flattened galvanized wire staples with 7/16 inch wide

crown outside measurement and divergent point for base ply of two-ply gypsum board application. Use as follows:

Length of Legs	Thickness of Gypsum Board
1-1/8 inches	1/2 inch
1-1/4 inches	5/8 inch

2.1.4 Adhesives

Provide non-aerosol adhesive products used on the interior of the building (defined as inside of the weatherproofing system) meeting either emissions requirements of CDPH SECTION 01350 (limit requirements for either office or classroom spaces regardless of space type) or VOC content requirements of SCAQMD Rule 1168. Provide aerosol adhesive products used on the interior of the building (defined as inside of the weatherproofing system) meeting either emissions requirements of CDPH SECTION 01350 (limit requirements for either office or classroom spaces regardless of space type) or VOC content requirements of GS-36. Provide certification or validation of indoor air quality for non-aerosol adhesives applied on the interior of the building (inside of the weatherproofing system). Provide certification or validation of indoor air quality for aerosol adhesives used on the interior of the building (inside of the weatherproofing system).

2.1.4.1 Adhesive for Fastening Gypsum Board to Metal Framing

Type recommended by gypsum board manufacturer.

2.1.4.2 Adhesive for Fastening Gypsum Board to Wood Framing

ASTM C557.

2.1.4.3 Adhesive for Laminating

Adhesive attachment is not permitted for multi-layer gypsum boards. For laminating gypsum studs to face panels, provide adhesive recommended by gypsum board manufacturer.

2.1.5 Gypsum Studs

Provide 1 inch minimum thickness and 6 inch minimum width. Studs may be of 1 inch thick gypsum board or multilayers fastened to required thickness. Conform to ASTM C1396/C1396M for material and GA 216 for installation.

2.1.6 Accessories

ASTM C1047. Fabricate from corrosion protected steel designed for intended use. Accessories manufactured with paper flanges are not acceptable. Flanges must be free of dirt, grease, and other materials that may adversely affect bond of joint treatment. Provide prefinished or job decorated materials.

2.1.6.1 Trim

Provide trim for plaster including, as required:

a. Cornerbeads.

b. Bullnose Beads.

c. LC Beads.

d. L-Beads.

e. U-Beads.

f. Control Joints.

g. Curved-edge Cornerbeads.

h. Base-of-wall Trim.

i. Trim required to complete the work.

2.1.6.2 Materials

Steel: ASTM A653/A653M Galvanized steel assemblies and fasteners.

2.1.7 Asphalt Impregnated Building Felt

Provide a 15 lb asphalt moisture barrier over glass mat covered or reinforced gypsum sheathing. Conforming to ASTM D226/D226M Type 1 (No. 15) for asphalt impregnated building felt.

2.1.8 Water

Provide clean, fresh, and potable water.

PART 3 EXECUTION

3.1 EXAMINATION

3.1.1 Framing and Furring

Verify that framing and furring are securely attached and of sizes and spacing to provide a suitable substrate to receive gypsum board and cementitious backer units. Verify that all blocking, headers and supports are in place to support plumbing fixtures and to receive soap dishes, grab bars, towel racks, and similar items. Do not proceed with work until framing and furring are acceptable for application of gypsum board and cementitious backer units.

3.1.2 Gypsum Board and Framing

Verify that surfaces of gypsum board and framing to be bonded with an adhesive are free of dust, dirt, grease, and any other foreign matter. Do not proceed with work until surfaces are acceptable for application of gypsum board with adhesive.

3.1.3 Building Construction Materials

Do not install building construction materials that show visual evidence of biological growth.

3.2 APPLICATION OF GYPSUM BOARD

Apply gypsum board to framing and furring members in accordance with ASTM C840 or GA 216 and the requirements specified. Apply gypsum board with separate panels in moderate contact; do not force in place. Stagger end joints of adjoining panels. Neatly fit abutting end and edge joints. Use gypsum board of maximum practical length; select panel sizes to minimize waste. Cut out gypsum board to make neat, close, and tight joints around openings. In vertical application of gypsum board, provide panels in lengths required to reach full height of vertical surfaces in one continuous piece. Lay out panels to minimize waste; reuse cutoffs whenever feasible. Surfaces of gypsum board and substrate members may be bonded together with an adhesive, except where prohibited by fire rating(s). Treat edges of cutouts for plumbing pipes, screwheads, and joints with moisture-resistant compound as recommended by the gypsum board manufacturer. Minimize framing by floating corners with single studs and drywall clips. Install 5/8 inch gypsum or ceiling board over framing at 24 inch on center. Provide type of gypsum board for use in each system specified herein as indicated.

3.2.1 Application of Single-Ply Gypsum Board to Wood Framing

Apply in accordance with ASTM C840, System I or GA 216.

3.2.2 Application of Two-Ply Gypsum Board to Wood Framing

Apply in accordance with ASTM C840, System II or GA 216.

3.2.3 Adhesive Nail-On Application to Wood Framing

Apply in accordance with ASTM C840, System III or GA 216. This method may be used in lieu of ASTM C840, System I at the option of the Contractor.

3.2.4 Semi-Solid Gypsum Board Partitions

Provide in accordance with ASTM C840, System IV or GA 216.

3.2.5 Solid Gypsum Board Partitions

Provide in accordance with ASTM C840, System V or GA 216.

3.2.6 Adhesive Application to Interior Masonry or Concrete Walls

Apply in accordance with ASTM C840, System VI or GA 216.

3.2.7 Application of Gypsum Board to Steel Framing and Furring

Apply in accordance with ASTM C840, System VIII or GA 216.

3.2.8 Arches and Bending Radiuses

Apply gypsum board in accordance with ASTM C840, System IX or GA 216.

3.2.9 Floating Interior Angles

Minimize framing by floating corners with single studs and drywall clips. Locate the attachment fasteners adjacent to ceiling and wall intersections in accordance with ASTM C840, System XII or GA 216, for single-ply applications of gypsum board to wood framing.

3.2.10 Control Joints

Install expansion and contraction joints in ceilings and walls in accordance with ASTM C840, System XIII or GA 216. Joints in fire-rated and sound-rated ceiling and walls to maintain the fire and sound rating.

3.2.10.1 Control Joint Shop Drawings

a. Submit control joint shop drawings for approval.

b. Install control joints where a partition, wall, or ceiling traverses a construction joint in the base building structure.

c. Install control joints where a wall or partition runs in an uninterrupted straight plane exceeding 30 feet.

d. Install control joints in interior ceilings with a perimeter relief so that linear dimensions between control joints do not exceed 50 feet.

e. Install control joints in interior ceilings without perimeter relief so that linear dimensions between control joints do not exceed 30 feet.

f. Install control joints in exterior ceilings and soffits so that linear dimensions between control joints do not exceed 30 feet.

g. Install control joints or intermediate blocking where ceiling framing members change direction.

h. In addition to the above, install control joints where indicated on the drawings as a design accent or architectural feature.

i. Do not install control joints where building or structural expansion or seismic joints are located. Install suitable joint expansion or seismic joint assemblies as indicated on the drawings.

3.3 FINISHING OF GYPSUM BOARD

Tape and finish gypsum board in accordance with ASTM C840, GA 214, and GA 216. Finish plenum areas above ceilings to Level 1 in accordance with GA 214. Finish moisture-resistant gypsum backing board, ASTM C1396/C1396M, to receive ceramic tile to Level 2 in accordance with GA 214. Finish walls and ceilings to receive a heavy-grade wall covering or heave textured finish before painting to Level 3 in accordance with GA 214. Finish walls and ceilings without critical lighting to receive flat paints, light textures, or wall coverings to Level 4 in accordance with GA 214. Unless otherwise specified, finish all gypsum board walls, partitions, and ceilings to Level 5 in accordance with GA 214. Provide joint, fastener depression, and corner treatment. Tool joints as smoothly as possible to minimize sanding and dust. Do not use self-adhering fiber glass mesh tape with conventional drying type joint compounds; use setting or hardening type compounds only. Provide treatment for moisture-resistant gypsum board as recommended by the gypsum board manufacturer. Protect workers, building occupants, and HVAC systems from gypsum dust.

3.3.1 Uniform Surface

Wherever gypsum board is to receive eggshell, semigloss, or gloss paint

finish, or where severe, up or down lighting conditions occur, finish gypsum wall surface in accordance to GA 214 Level 5. In accordance with GA 214 Level 5, apply a thin skim coat of joint compound to the entire gypsum board surface, after the two-coat joint and fastener treatment is complete and dry.

3.4 SEALING

Seal openings around pipes, fixtures, and other items projecting through gypsum board and cementitious backer units as specified in Section 07 92 00 JOINT SEALANTS. Apply material with exposed surface flush with gypsum board or cementitious backer units.

3.5 PATCHING

Patch surface defects in gypsum board to a smooth, uniform appearance, ready to receive finishes.

-- End of Section --

P2# 519087 - DSSC DLA Repair Building 27
Columbus, OH

SECTION 09 30 10

CERAMIC, QUARRY, AND GLASS TILING
08/20

PART 1 GENERAL

1.1 REFERENCES

The publications listed below form a part of this specification to the extent referenced. The publications are referred to within the text by the basic designation only.

AMERICAN NATIONAL STANDARDS INSTITUTE (ANSI)

ANSI A108/A118/A136.1	(2024) American National Standard Specifications for the Installation of Ceramic Tile
ANSI A137.1	(2019) American National Standards Specifications for Ceramic Tile
ANSI A137.3/A108.19	(2017) American National Standard Specifications for Gauged Porcelain Tile and Gauged Porcelain Tile Panels/Slabs

ASTM INTERNATIONAL (ASTM)

ASTM C33/C33M	(2024a) Standard Specification for Concrete Aggregates
ASTM C144	(2024) Standard Specification for Aggregate for Masonry Mortar
ASTM C150/C150M	(2024) Standard Specification for Portland Cement
ASTM C206	(2014; R 2022) Standard Specification for Finishing Hydrated Lime
ASTM C207	(2024) Standard Specification for Hydrated Lime for Masonry Purposes
ASTM C648	(2020) Standard Test Method for Breaking Strength of Ceramic Tile
ASTM C1026	(2023) Standard Test Method for Measuring the Resistance of Ceramic and Glass Tile to Freeze-Thaw Cycling
ASTM C1027	(2009; R 2017) Standard Test Method for Determining Visible Abrasion Resistance of Glazed Ceramic Tile
ASTM C1178/C1178M	(2024) Standard Specification for Glass Mat Water-Resistant Gypsum Backing Panel

CALIFORNIA DEPARTMENT OF PUBLIC HEALTH (CDPH)

CDPH SECTION 01350	(2017; Version 1.2) Standard Method for the Testing and Evaluation of Volatile Organic Chemical Emissions from Indoor Sources using Environmental Chambers

GREEN SEAL (GS)

GS-36	(2013) Adhesives for Commercial Use

MARBLE INSTITUTE OF AMERICA (MIA)

MIA Design Manual	(2016) Dimension Stone Design Manual

SCIENTIFIC CERTIFICATION SYSTEMS (SCS)

SCS	SCS Global Services (SCS) Indoor Advantage

SOUTH COAST AIR QUALITY MANAGEMENT DISTRICT (SCAQMD)

SCAQMD Rule 1168	(2022) Adhesive and Sealant Applications

TILE COUNCIL OF NORTH AMERICA (TCNA)

TCNA Hdbk	(2017) Handbook for Ceramic, Glass, and Stone Tile Installation

U.S. NATIONAL ARCHIVES AND RECORDS ADMINISTRATION (NARA)

36 CFR 1191	Americans with Disabilities Act (ADA) Accessibility Guidelines for Buildings and Facilities; Architectural Barriers Act (ABA) Accessibility Guidelines

UL SOLUTIONS (UL)

UL 2818	(2022) GREENGUARD Certification Program For Chemical Emissions For Building Materials, Finishes And Furnishings

1.2 SUBMITTALS

Government approval is required for submittals with a "G" or "S" classification. Submittals not having a "G" or "S" classification are for Contractor Quality Control approval. Submittals not having a "G" or "S" classification are for information only. When used, a code following the "G" classification identifies the office that will review the submittal for the Government. Submit the following in accordance with Section 01 33 00 SUBMITTAL PROCEDURES:

SD-02 Shop Drawings

Detail Drawings;

SD-03 Product Data

Porcelain Tile;

Gauged Porcelain Tile;

Quarry Tile;

Mosaic Tile;

Large Format Glass Tile;

Glazed Ceramic Wall Tile;

Transition Strips;

Metal Strips;

Setting-Bed;

Mortar, Grout, and Adhesive;

Reinforcing Wire Fabric

Glass-Mat Gypsum Water-Resistant Backing Board;

Waterproof Membrane;

Crack Isolation Membrane;

SD-04 Samples

Tile;

Accessories;

Transition Strips;

Metal Strips;

Grout;

SD-07 Certificates

Indoor Air Quality for Adhesives; S

Indoor Air Quality for Sealants; S

SD-08 Manufacturer's Instructions

Manufacturer's Approved Cleaning Instructions

SD-10 Operation and Maintenance Data

Gauged Porcelain Tile, Data Package 1;

Porcelain Tile, Data Package 1;

Quarry Tile, Data Package 1;

Mosaic Tile, Data Package 1;

Large Format Glass Tile, Data Package 1;

Glazed Ceramic Wall Tile, Data Package 1;

Transition Strips, Data Package 1;

Metal Strips, Data Package 1;

1.3 CERTIFICATIONS

1.3.1 Indoor Air Quality Certifications

Provide products certified to meet indoor air quality requirements by UL 2818 (Greenguard) Gold, SCS Global Services Indoor Advantage Gold or provide certification or validation by other third-party programs that products meet the requirements of this Section. Provide current product certification documentation from certification body.When product does not have certification, provide validation that product meets the indoor air quality product requirements cited in this Section.

1.4 QUALITY ASSURANCE

Provide installers having a minimum of two years of experience with a company specializing in performing the type of work described. Each type and color of tile to be provided from a single source. Each type and color of mortar, adhesive, and grout to be provided from the same source.

1.5 DELIVERY, STORAGE, AND HANDLING

Ship tiles in sealed packages and clearly marked with the grade, type of tile, producer identification, and country of origin. Deliver materials to the project site in manufacturer's original unopened containers with seals unbroken and labels and hallmarks intact. Protect materials from weather, and store them under cover in accordance with manufacturer's printed instructions. Store and handle tiles per manufacturer's instructions for gauged porcelain tile and gauged porcelain tile panels/slabs.

1.6 ENVIRONMENTAL REQUIREMENTS

Do not perform ceramic tile work unless the substrate and ambient temperature is at least 50 degrees F and rising. Maintain temperature above 50 degrees F while the work is being performed and for at least 7 days after completion of the work. When temporary heaters are used, ventilate the area to the outside to avoid carbon dioxide damage to new tilework.

1.7 WARRANTY

Provide manufacturer's warranty to repair or replace defective tiling materials and workmanship, including tile, mortar and grout products and installation as a system, for a period of 2years from date of final acceptance of the work..

1.8 EXTRA MATERIALS

Supply an extra 2 percent of each type tile used in clean and marked cartons.

PART 2 PRODUCTS

2.1 TILE

Provide tiles that comply with ANSI A137.1 and are standard grade tiles. Provide a minimum breaking strength of 125 lbs. for wall tile and 250 lbs. for floor tile in accordance with ASTM C648. Provide exterior building tile for cold climate projects that is approved by the manufacturer for exterior use when tested in accordance with ASTM C1026. Provide floor tiles with a minimum wet dynamic coefficient of friction (DCOF) value of 0.42 when tested in accordance with ANSI A137.1 requirements. Provide glazed floor tile with a Class IV-Commercial classification as rated by the manufacturer when tested in accordance with ASTM C1027 for visible abrasion resistance as related to foot traffic. For materials like tile, accessories, and transition strips submit samples of sufficient size to show color range, pattern, type and joints.

Submit manufacturers' descriptive product data for each type of ceramic, quarry and glass tiling indicated. Include manufacturers' literature, finishes, profiles and thicknesses of materials.

Submit manufacturers' operations and maintenance data for each type of ceramic, quarry and glass tiling indicated in accordance with Section 01 78 23 OPERATIONS AND MAINTENANCE DATA.

2.1.1 Porcelain Tile

Provide glazed, porcelain tile and covebullnose base and trim pieces. Provide nominal tile size(s) of 5 by 10, 12 by 24 & 4 by 12 inch and 3/8 inch thick.

Provide porcelain tiling materials that contain a minimum of 10 percent recycled content. Provide data identifying percentage of recycled content for porcelain tile.

2.1.2 Gauged Porcelain Tile

Provide glazed color body (body of tile is stained to match the glaze color), gauged porcelain tile and cove bullnose base and trim pieces. Blend tiles in factory and in packages to have same color range and continuous blend for installation. Provide nominal tile size(s) of 12 by 24 & 4 by 12 inch and 3/8 inch thick.

Provide gauged porcelain tile and materials that contain a minimum of 10 percent recycled content. Provide data identifying percentage of recycled content for gauged porcelain tile and .

2.1.3 Glazed Ceramic Wall Tile

Provide glazed ceramic wall tile that has cushioned edges and trim with lead-free matte finish. Provide nominal tile size(s) of 5 by 10 inch.

Provide glazed ceramic wall tile materials that contain a minimum of 3 percent recycled content. Provide data identifying percentage of recycled content for glazed ceramic wall tile.

2.2 SETTING-BED

Submit manufacturer's catalog data. Compose the setting-bed of the

following materials:

2.2.1 Aggregate for Concrete Fill

Conform to ASTM C33/C33M for aggregate fill. Do not exceed one-half the thickness of concrete fill for maximum size of coarse aggregate.

2.2.2 Portland Cement

Conform to ASTM C150/C150M for cement, Type I, white for wall mortar and gray for other uses.

2.2.3 Sand

Conform to ASTM C144 for sand.

2.2.4 Hydrated Lime

Conform to ASTM C206 for hydrated lime, Type S or ASTM C207, Type S.

2.3 WATER

Provide potable water.

2.4 MORTAR, GROUT, AND ADHESIVE

Provide non-aerosol adhesive products used on the interior of the building (defined as inside of the weatherproofing system) meeting either emissions requirements of CDPH SECTION 01350 (limit requirements for either office or classroom spaces regardless of space type) or VOC content requirements of SCAQMD Rule 1168. Provide aerosol adhesives used on the interior of the building meeting either emissions requirements of CDPH SECTION 01350 (limit requirements for either office or classroom spaces regardless of space type) or VOC content requirements of GS-36. For products located on the interior of the building (inside of the weatherproofing system, provide certification or validation of indoor air quality for adhesives. Provide bond coat, mortar, and grout supplied from the same manufacturer.

2.4.1 Dry-Set Portland Cement Mortar

TCNA Hdbk.

2.4.2 Furan Mortar

TCNA Hdbk.

2.4.3 Latex-Portland Cement Mortar

TCNA Hdbk.

2.4.4 Ceramic Tile Grout

TCNA Hdbk; petroleum-free and plastic-free standard cement commercial portland cement grout.

2.4.5 Organic Adhesive

TCNA Hdbk, Type I. Water-resistant. Comply with ANSI A108/A118/A136.1.

2.4.6 Epoxy Resin Grout

TCNA Hdbk. Water cleanable epoxy conforming to ANSI A108/A118/A136.1; provide manufacturer proportioned and packaged kit having hardener, resin and colored filler and horizontal and vertical grade products as applicable.

2.4.7 Furan Resin Grout

TCNA Hdbk; chemical resistant furan conforming to ANSI A108/A118/A136.1; and consist of an intimate mixture of furfuryl-alcohol resin with carbon filler and catalyst. Prohibited unless specifically indicated otherwise.

2.4.8 Urethane Grout

TCNA Hdbk; premixed, urethane, water-based grout with color consistency and antimicrobial protection; no color fading, streaking or shading, chemical and stain resistant; and UV stable.

2.4.9 Sealants

Comply with applicable regulations regarding toxic and hazardous materials and as specified. Provide sealant that does not change the color or alter the appearance of the grout. Refer to Section 07 92 00 JOINT SEALANTS.

Provide sealants used on the interior of the building (defined as inside of the weatherproofing system) meeting either emissions requirements of CDPH SECTION 01350 (limit requirements for either office or classroom spaces regardless of space type) or VOC content requirements of SCAQMD Rule 1168. For products located on the interior of the building (inside of the weatherproofing system), provide certification or validation of indoor air quality for sealants.

2.5 SUBSTRATES

Refer to Section 09 29 00 GYPSUM BOARD for cementitious backer units and glass-mat water-resistant backing board.

2.5.1 Glass-Mat Gypsum Water-Resistant Backing Board
Provide glass-mat water-resistant backing board, for use as tile substrate as indicated, in accordance with ASTM C1178/C1178M. Provide 5/8 inch thick glass-mat water-resistant backing board.

2.6 MISCELLANEOUS TRIMS

2.6.1 Transition Strips

Provide anodized aluminum transitions between tile and carpet or resilient flooring. Provide types as recommended by flooring manufacturer for both edges and transitions of flooring materials specified. Categorize marble Group A as classified by MIA Design Manual. Provide a fine sand-rubbed finish marble, beige in color. Provide Provide transition strips that comply with 36 CFR 1191requirements.

2.6.2 Metal Strips

Provide Cove trim shapes, height to match tile and setting thickness, designed specifically for flooring, and wall applications. Provide profiles appropriate for finished floor and wall materials as indicated.

2.7 WATERPROOF MEMBRANE

2.7.1 General

Manufacturer's standard product that complies with ANSI A108/A118/A136.1 and is recommended by the manufacturer for the application indicated. Include reinforcement and accessories recommended by manufacturer.

2.7.2 Chlorinated-Polyethylene Shower Waterproof Membrane

Nonplasticized, chlorinated polyethylene faced on both sides with nonwoven polyester fabric; 0.040 inch nominal thickness.

2.8 CRACK ISOLATION MEMBRANE

2.8.1 General

Manufacturer's standard product that complies with ANSI A108/A118/A136.1 and is recommended by the manufacturer for the application indicated. Include reinforcement and accessories recommended by manufacturer.

2.8.2 Chlorinated-Polyethylene Crack Isolation Membrane

Nonplasticized, chlorinated polyethylene faced on both sides with nonwoven polyester fabric; 0.030 inch nominal thickness.

2.9 COLOR, TEXTURE, AND PATTERN

Provide color, pattern and texture as indicated; colors listed are not intended to limit the selection of equal colors from other manufacturers..

PART 3 EXECUTION

3.1 PREPARATORY WORK AND WORKMANSHIP

Inspect surface to receive tile in conformance to the requirements of TCNA Hdbk for surface conditions for the type setting bed specified and for workmanship. Provide variations of tiled surfaces that fall within maximum values shown below:

TYPE	WALLS	FLOORS
Dry-Set Mortar	1/8 inch in 8 ft.	1/8 inch in 10 ft.
Organic Adhesives	1/8 inch in 8 ft.	1/16 inch in 3 ft.
Latex-Portland Cement Mortar	1/8 inch in 8 ft.	1/8 inch in 10 ft.
Epoxy	1/8 inch in 8 ft.	1/8 inch in 10 ft.

3.2 GENERAL INSTALLATION REQUIREMENTS

Do not start tile work until roughing in for mechanical and electrical work has been completed and tested, and built-in items requiring membrane waterproofing have been installed and tested. Close space, in which tile

is being set, to traffic and other work. Keep closed until tile is firmly set. Do not start floor tile installation in spaces requiring wall tile until after wall tile has been installed. Apply tile in colors and patterns indicated in the area shown on the drawings. Install tile with the respective surfaces in true even planes to the elevations and grades shown. Provide special shapes as required for sills, jambs, recesses, offsets, external corners, and other conditions to provide a complete and neatly finished installation. Solidly back tile bases and coves with mortar. Do not walk or work on newly tiled floors without using kneeling boards or equivalent protection of the tiled surface. Keep traffic off horizontal portland cement mortar installations for at least 72 hours. Keep all traffic off epoxy installed floors for at least 40 hours after grouting, and heavy traffic off for at least 7 days, unless otherwise specifically authorized by manufacturer. Dimension and draw detail drawings at a minimum scale of 1/4 inch = 1 foot. Include drawings of pattern at inside corners, outside corners, termination points and location of all equipment items such as thermostats, switch plates, mirrors and toilet accessories mounted on surface. Submit drawings showing ceramic tile pattern elevations and floor plans. Submit manufacturer's preprinted installation instructions.

Do not install building construction materials that show visual evidence of biological growth.

3.3 INSTALLATION OF SUBSTRATES

3.3.1 Glass-Mat Water-Resistant Backing Board

Install in accordance with manufacturer's written instructions.

3.4 INSTALLATION OF WALL TILE

Install wall tile in accordance with the TCNA Hdbk, method and with grout joints as recommended by the manufacturer for the type of tile. Install thinner wall tile flush with thicker wall tile applied on same wall and provide installation materials as recommended by the tile and setting materials manufacturer's to achieve flush installation.

3.4.1 Installation of Gauged Porcelain Tile

Install gauged porcelain tile in accordance with TCNA Hdbk method and ANSI A137.3/A108.19 for thin-bed method bonded with modified dry-set cement mortar over improved modified dry-set cement mortar.

3.4.2 Workable or Cured Mortar Bed

Install tile over workable mortar bed or a cured mortar bed at the option of the Contractor. Install a 4 mil polyethylene membrane, metal lath, and scratch coat. Conform to TCNA Hdbk method for workable mortar bed, materials, and installation of tile. Conform to TCNA Hdbk method for cured mortar bed and materials.

3.4.3 Dry-Set Mortar and Latex-Portland Cement Mortar

Use latex-portland cement to install tile in accordance with TCNA Hdbk method . Use latex-portland cement when installing porcelain ceramic tile.

3.4.4 Organic Adhesive

Comply with the requirements of TCNA Hdbk method for organic adhesive installation of ceramic tile.

3.4.5 Furan Mortar and Grout

Comply with the requirements of TCNA Hdbk method for furan mortar and grout installation.

3.4.6 Ceramic Tile Grout

Prepare and install ceramic tile grout in accordance with TCNA Hdbk method . Provide and apply manufacturer's standard product for sealing grout joints in accordance with manufacturer's recommendations.

3.4.7 Epoxy Resin Grout

Prepare and install epoxy resin grout in accordance with TCNA Hdbk method .

3.4.8 Urethane Grout

Prepare and install urethane grout in accordance with TCNA Hdbk method .

3.5 INSTALLATION OF FLOOR TILE

Install floor tile in accordance with TCNA Hdbk method and with grout joints as recommended by the manufacturer for the type of tile.

3.5.1 Installation of Gauged Porcelain Tile

Install gauged porcelain tile in accordance with TCNA Hdbk method and ANSI A137.3/A108.19 for thin-bed method bonded with modified dry-set cement mortar over improved modified dry-set cement mortar.

3.5.2 Workable or Cured Mortar Bed

Install floor tile over a workable mortar bed or a cured mortar bed at the option of the Contractor. Conform to TCNA Hdbk method for workable mortar bed materials and installation. Conform to TCNA Hdbk method for cured mortar bed materials and installation. Provide minimum 1/4 inch to maximum 3/8 inch joints in uniformed width.

3.5.3 Dry-Set and Latex-Portland Cement

Use latex-portland cement mortar to install tile directly over properly cured, plane, clean concrete slabs in accordance with TCNA Hdbk method . Use latex-portland cement when installing porcelain ceramic tile.

3.5.4 Resinous Grout

When resinous grout is indicated, grout quarry tile with either furan grout conforming to ANSI A108/A118/A136.1 or epoxy resin grout conforming to ANSI A108/A118/A136.1. Rake and clean joints to the full depth of the tile and neutralize when recommended by the resin manufacturer. Install epoxy resin grout in conformance with TCNA Hdbk method . Install resin grout in accordance with manufacturer's printed installation instructions. Provide a coating of wax applied from the manufacturer on all tile installed with furan resin. Follow manufacturer's printed

installation instructions of installed resin grout for proportioning, mixing, installing, and curing. Maintain the recommended temperature in the area and on the surface to be grouted. Protect finished grout of grout stain.

3.5.5 Ceramic Tile Grout

Prepare and install ceramic tile grout in accordance with TCNA Hdbk method . Provide and apply manufacturer's standard product for sealing grout joints in accordance with manufacturer's recommendations.

3.5.6 Waterproof and Crack Isolation Membranes

Install as indicated in accordance with manufacturer's written instructions.

3.5.7 Concrete Fill

Provide a 3500 psi concrete fill mix to dry as consistency as practicable. Spread, tamp, and screed concrete fill to a true plane, and pitch to drains or levels as shown. Thoroughly damp concrete fill before applying setting-bed material. Reinforce concrete fill with one layer of reinforcement, with the uncut edges lapped the width of one mesh and the cut ends and edges lapped a minimum 2 inch. Tie laps together with 18 gauge wire every 10 inch along the finished edges and every 6 inch along the cut ends and edges. Provide reinforcement with support and secure in the centers of concrete fills. Provide a continuous mesh; except where expansion joints occur, cut mesh and discontinue across such joints. Provide reinforced concrete fill under the setting-bed where the distance between the under-floor surface and the finished tiles floor surface is a minimum of 2 inches, and of the same thickness that the mortar setting-bed over the concrete fill with the thickness required in the specified TCNA Hdbk method .

3.6 INSTALLATION OF MISCELLANEOUS TRIMS

3.6.1 Transition Strips

Install transition strips where indicated, in a manner similar to that of the ceramic tile floor and as recommended by the manufacturer. Provide thresholds full width of the opening. Install head joints at ends not exceeding 1/4 inch in width and grouted full.

3.6.2 Metal Trims

Install trim where indicated. Embed anchoring leg in setting mortar in accordance with manufacturer's instructions. During grouting of tile joints, immediately wipe grout from finish surface.

3.7 EXPANSION JOINTS

Form and seal joints as specified in Section 07 92 00 JOINT SEALANTS.

3.7.1 Walls

Provide expansion joints at control joints in backing material. Wherever backing material changes, install an expansion joint to separate the different materials.

3.7.2 Floors

Provide expansion joints over construction joints, control joints, and expansion joints in concrete slabs in accordance with TCNA Hdbk method EJ171 type to suit conditions. Provide expansion joints where tile abuts restraining surfaces such as perimeter walls, curbs and columns and at intervals of 20 to 25 feet each way in large interior floor areas Extend expansion joints through setting-beds and fill.

3.8 CLEANING AND PROTECTING

Upon completion, thoroughly clean tile surfaces in accordance with manufacturer's approved cleaning instructions. Do not use acid for cleaning glazed tile. Clean floor tile with resinous grout or with factory mixed grout in accordance with printed instructions of the grout manufacturer. After the grout has set, provide a protective coat of a noncorrosive soap or other approved method of protection for tile wall surfaces. Cover tiled floor areas with building paper before foot traffic is permitted over the finished tile floors. Provide board walkways on tiled floors that are to be continuously used as passageways by workmen. Replace damaged or defective tiles.

-- End of Section --

SECTION 09 51 00

ACOUSTICAL CEILINGS
08/20

PART 1 GENERAL

1.1 REFERENCES

The publications listed below form a part of this specification to the extent referenced. The publications are referred to within the text by the basic designation only.

ASTM INTERNATIONAL (ASTM)

ASTM A489	(2018; E 2018) Standard Specification for Carbon Steel Eyebolts
ASTM A641/A641M	(2019) Standard Specification for Zinc-Coated (Galvanized) Carbon Steel Wire
ASTM A653/A653M	(2023) Standard Specification for Steel Sheet, Zinc-Coated (Galvanized) or Zinc-Iron Alloy-Coated (Galvannealed) by the Hot-Dip Process
ASTM A1008/A1008M	(2024) Standard Specification for Steel, Sheet, Cold-Rolled, Carbon, Structural, High-Strength Low-Alloy, High-Strength Low-Alloy with Improved Formability, Solution Hardened, and Bake Hardenable
ASTM B633	(2023) Standard Specification for Electrodeposited Coatings of Zinc on Iron and Steel
ASTM C423	(2023; E 2024) Sound Absorption and Sound Absorption Coefficients by the Reverberation Room Method
ASTM C635/C635M	(2022) Standard Specification for Manufacture, Performance, and Testing of Metal Suspension Systems for Acoustical Tile and Lay-In Panel Ceilings
ASTM C636/C636M	(2013) Standard Practice for Installation of Metal Ceiling Suspension Systems for Acoustical Tile and Lay-In Panels
ASTM C834	(2017; R 2023) Standard Specification for Latex Sealants
ASTM E413	(2022) Classification for Rating Sound Insulation
ASTM E795	(2023) Standard Practices for Mounting Test Specimens During Sound Absorption Tests

ASTM E1111/E1111M	(2014; R 2022) Standard Test Method for Measuring the Interzone Attenuation of Open Office Components
ASTM E1264	(2023) Standard Classification for Acoustical Ceiling Products
ASTM E1414/E1414M	(2021a) Standard Test Method for Airborne Sound Attenuation Between Rooms Sharing a Common Ceiling Plenum
ASTM E1477	(1998; R 2022a) Standard Test Method for Luminous Reflectance Factor of Acoustical Materials by Use of Integrating-Sphere Reflectometers

UL SOLUTIONS (UL)

UL 2818	(2022) GREENGUARD Certification Program For Chemical Emissions For Building Materials, Finishes And Furnishings

1.2 SUBMITTALS

Government approval is required for submittals with a "G" or "S" classification. Submittals not having a "G" or "S" classification are for information only. When used, a code following the "G" classification identifies the office that will review the submittal for the Government. Submit the following in accordance with Section 01 33 00 SUBMITTAL PROCEDURES:

SD-02 Shop Drawings

Drawings;

SD-03 Product Data

Acoustical Ceiling Systems;

Acoustical Performance;

SD-04 Samples

Acoustical Units;

Acoustical Ceiling Tiles;

1.3 CERTIFICATIONS

1.3.1 Indoor Air Quality Certifications

1.3.1.1 Ceiling Tiles

Provide products certified to meet indoor air quality requirements by UL 2818 (Greenguard) Gold, SCS Global Services Indoor Advantage Gold or provide certification or validation by other third-party programs that products meet the requirements of this section. Provide current product certification documentation from certification body.

1.3.1.2 Adhesives and Sealants

Provide products certified to meet indoor air quality requirements by UL 2818 (Greenguard) Gold, SCS Global Services Indoor Advantage Gold or provide certification or validation by other third-party programs that products meet the requirements of this Section. Provide current product certification documentation from certification body. When product does not have certification, provide validation that product meets the indoor air quality product requirements cited in this Section.

1.4 DELIVERY, STORAGE. AND HANDLING

Deliver materials to the site in the manufacturer's original unopened containers with brand name and type clearly marked. Carefully handle and store materials in dry, watertight enclosures. Immediately before installation, store acoustical units for not less than 24 hours at the same temperature and relative humidity as the space where they will be installed in order to assure proper temperature and moisture acclimation.

1.5 ENVIRONMENTAL REQUIREMENTS

Maintain a uniform temperature of not less than 60 degrees F nor more than 85 degrees F and a relative humidity of not more than 70 percent for 24 hours before, during, and 24 hours after installation of acoustical units.

1.6 SCHEDULING

Complete and dry interior finish work such as plastering, concrete and terrazzo work before ceiling installation. Complete mechanical, electrical, and other work above the ceiling line; install and start operating heating, ventilating, and air conditioning systems in order to maintain temperature and humidity requirements.

1.7 WARRANTY

Provide manufacturer's warranty to repair or replace defective materials and workmanship including but not limited to, sagging and warping of panels and rusting and of grid systems, for a period of ten years from date of final acceptance of the work.

1.8 EXTRA MATERIALS

Furnish spare tiles, from the same lot as those installed, of each color at the rate of 25 tiles for each 1000 tiles installed.

PART 2 PRODUCTS

2.1 SYSTEM DESCRIPTION

Provide sound controlling units mechanically mounted on a ceiling suspension system for acoustical treatment. Provide the unit size, texture, finish, and color as specified. Coordinate the entire ceiling system with other details, like the location of access panels and ceiling penetrations, for instance, shown on the drawings. Submit drawings showing the the location, extent and details of acoustical treatment including suspension system, method of anchoring and fastening, and reflected ceiling plan.

2.1.1 Acoustical Performance

2.1.1.1 Ceiling Sound Transmission

Provide ceiling systems with the specified Ceiling Attenuation Class (CAC) ratings as determined in accordance with ASTM E1414/E1414M and ASTM E413. Provide sound attenuators over light fixtures, air terminals and other ceiling penetrations, provide acoustical blanket insulation on top of the ceiling or adjacent to partitions to provide lightweight acoustical plenum barriers above partitions as required to achieve the specified CAC ratings. Provide test ceiling continuous at the partition and assembled in the suspension system in the same manner that the ceiling will be installed on the project.

2.1.1.2 Ceiling Sound Absorption

Determine the Noise Reduction Coefficient (NRC) in accordance with ASTM C423. Determine Articulation Class (AC) in accordance with ASTM E1111/E1111M.

2.1.2 Light Reflectance

Determine light reflectance factor in accordance with ASTM E1477 test method.

2.2 ACOUSTICAL UNITS

Submit samples of each type of acoustical unit and each type of suspension grid tee section showing texture, finish, and color. Conform acoustical units to ASTM E1264, Class A, and the following requirements:

2.2.1 Units for Exposed-Grid System

2.2.1.1 Type

III (non-asbestos mineral fiber with painted finish).

2.2.1.2 Flame Spread

Class A, 25 or less

2.2.1.3 Pattern

2.2.1.4 Minimum NRC

0.75 when tested on mounting Type E-400 of ASTM E795.

2.2.1.5 Minimum Light Reflectance Coefficient

LR-1, 0.75 or greater

2.2.1.6 Nominal Size

24 by 4824 by 24 inch

2.2.1.7 Edge Detail

Tegular

2.2.1.8 Finish

Factory-applied standard finish. See paragraph COLORS AND STANDARDS.

2.2.1.9 Minimum CAC

35

2.2.2 Unit Acoustical Absorbers

Provide individually mounted sound absorbing plaques composed of glass fibers or non-asbestos mineral fibers and having a NRC range of not less than 0.60 - 0.70 when tested in accordance with ASTM C423 and reported as a 4 frequency average.

2.3 SUSPENSION SYSTEM

Provide exposed-grid suspension system conforming to ASTM C635/C635M for intermediate-duty systems . Provide surfaces exposed to view of aluminum or steel with a factory-applied white baked-enamel finish . Provide wall molding having a flange of not less than 15/16 inch . Provide standard corners. Provide a suspension system with a maximum deflection of 1/360 of the span length capable of supporting the finished ceiling, light fixtures, air diffusers, and accessories, as shown.

2.4 HANGERS

Provide hangers and attachment capable of supporting a minimum 300 pound ultimate vertical load without failure of supporting material or attachment.

2.4.1 Wires

Conform wires to ASTM A641/A641M, Class 1, 0.08 inch (12 gauge) in diameter.

2.4.2 Straps

Provide straps of 1 by 3/16 inch galvanized steel conforming to ASTM A653/A653M, with a light commercial zinc coating or ASTM A1008/A1008M with an electrodeposited zinc coating conforming to ASTM B633, Type RS.

2.4.3 Rods

Provide 3/16 inch diameter threaded steel rods, zinc or cadmium coated.

2.4.4 Eyebolts

Provide eyebolts of weldless, forged-carbon-steel, with a straight-shank in accordance with ASTM A489. Provide minimum 1/4 inch, zinc coated eyebolts.

2.5 ACCESS PANELS

Provide access panels that match adjacent acoustical units, designed and equipped with suitable framing and fastenings for removal and replacement without damage. Size panel to be not less than 12 by 12 inch or more than 12 by 24 inch.

a. Attach an identification plate of 0.032 inch thick aluminum, 3/4 inch in diameter, stamped with the letters "AP" and finished the same as the unit, near one corner on the face of each access panel.

b. Identify ceiling access panel by a number utilizing white identification plates or plastic buttons with contrasting numerals. Provide plates or buttons of minimum 1 inch diameter and securely attached to one corner of each access unit. Provide a typewritten card framed under glass listing the code identification numbers and corresponding system descriptions listed above. Mount the framed card where directed and furnish a duplicate card to the Contracting Officer. Code identification system is as follows:

(1) Fire detection/alarm system

(2) Air conditioning controls

(3) Plumbing system

(4) Heating and steam systems

(5) Air conditioning duct system

(6) Sprinkler system

(7) Intercommunication system

(8) Program entertainment

2.6 ADHESIVE

Use adhesive as recommended by tile manufacturer. Provide non-aerosol adhesive products used on the interior of the building (defined as inside of the weatherproofing system) that meet either emissions requirements of CDPH SECTION 01350 (limit requirements for either office or classroom spaces regardless of space type) or VOC content requirements of SCAQMD Rule 1168. Provide aerosol adhesives used on the interior of the building that meet either emissions requirements of CDPH SECTION 01350 (limit requirements for either office or classroom spaces regardless of space type) or VOC content requirements of GS-36. For products located on the interior of the building (inside of the weatherproofing system), provide certification or validation of indoor air quality for adhesives.

2.7 FINISHES

Use manufacturer's standard textures, patterns and finishes as specified

for acoustical units and suspension system members. Treat ceiling suspension system components to inhibit corrosion.

2.8 COLORS AND PATTERNS

Use colors and patterns for acoustical units and suspension system components as specified in Section 09 06 00 SCHEDULES FOR FINISHES.

2.9 ACOUSTICAL SEALANT

Conform acoustical sealant to ASTM C834, nonstaining. Provide sealants used on the interior of the building (defined as inside of the weatherproofing system)in accordance with requirements of Section 07 92 00 JOINT SEALANTS.

PART 3 EXECUTION

3.1 INSTALLATION

Do not install building construction materials that show visual evidence of biological growth.

Examine surfaces to receive directly attached acoustical units for unevenness, irregularities, and dampness that would affect quality and execution of the work. Rid areas, where acoustical units will be cemented, of oils, form residue, or other materials that reduce bonding capabilities of the adhesive. Complete and dry interior finish work such as plastering, concrete, and terrazzo work before installation. Complete and approve mechanical, electrical, and other work above the ceiling line prior to the start of acoustical ceiling installation. Provide acoustical work complete with necessary fastenings, clips, and other accessories required for a complete installation. Do not expose mechanical fastenings in the finished work. Lay out hangers for each individual room or space. Provide hangers to support framing around beams, ducts, columns, grilles, and other penetrations through ceilings. Keep main runners and carrying channels clear of abutting walls and partitions. Provide at least two main runners for each ceiling span. Wherever required to bypass an object with the hanger wires, install a subsuspension system so that all hanger wires will be plumb.

3.1.1 Suspension System

Install suspension system in accordance with ASTM C636/C636M and as specified herein. Do not suspend hanger wires or other loads from underside of steel decking.

3.1.1.1 Plumb Hangers

Install hangers plumb and not pressing against insulation covering ducts and pipes. Where lighting fixtures are supported from the suspended ceiling system, provide hangers at a minimum of four hangers per fixture and located not more than 6 inch from each corner of each fixture.

3.1.1.2 Splayed Hangers

Splay (slope or slant) hangers around obstructions, offsetting the resulting horizontal force by bracing, countersplaying, or other acceptable means.

3.1.2 Wall Molding

Provide wall molding where ceilings abut vertical surfaces. Miter corners where wall moldings intersect or install corner caps. Secure wall molding not more than 3 inch from ends of each length and not more than 16 inch on centers between end fastenings. Provide wall molding springs at each acoustical unit in semi-exposed or concealed systems.

3.1.3 Acoustical Units

Install acoustical units in accordance with the approved installation instructions of the manufacturer. Ensure that edges of acoustical units are in close contact with metal supports, with each other, and in true alignment. Arrange acoustical units so that units less than one-half width are minimized. Hold units in exposed-grid system in place with manufacturer's standard hold-down clips, if units weigh less than 1 psf or if required for fire resistance rating.

3.1.4 Acoustical Sealant

Seal all joints around pipes, ducts or electrical outlets penetrating the ceiling. Apply a continuous ribbon of acoustical sealant on vertical web of wall or edge moldings.

3.1.5 Adhesive Application

Wipe back of tile to remove accumulated dust. Daub acoustical units on back side with four equal daubs of adhesive. Apply daubs near corners of tiles. Ensure that contact area of each daub is at least 2 inch diameter in final position. Press units into place, aligning joints and abutting units tight and uniform without differences in joint widths.

3.2 CEILING ACCESS PANELS

Locate ceiling access panels directly under the items which require access.

3.3 CLEANING

Following installation, clean dirty or discolored surfaces of acoustical units and leave them free from defects. Remove units that are damaged or improperly installed and provide new units as directed.

-- End of Section --

SECTION 09 65 00

RESILIENT FLOORING
11/24

PART 1 GENERAL

1.1 REFERENCES

The publications listed below form a part of this specification to the extent referenced. The publications are referred to within the text by the basic designation only.

AMERICAN FOREST FOUNDATION (AFF)

ATFS STANDARDS	(2021) American Tree Farm System Standards of Sustainability

ASTM INTERNATIONAL (ASTM)

ASTM D4078	(2002; R 2015) Water Emulsion Floor Polish
ASTM D5603	(2001; R 2008) Rubber Compounding Materials - Recycled Vulcanizate Particulate Rubber
ASTM E648	(2023) Standard Test Method for Critical Radiant Flux of Floor-Covering Systems Using a Radiant Heat Energy Source
ASTM F710	(2022) Standard Practice for Preparing Concrete Floors to Receive Resilient Flooring
ASTM F1303	(2004; R 2021) Standard Specification for Sheet Vinyl Floor Covering with Backing
ASTM F1482	(2021) Standard Practice for Installation and Preparation of Panel Type Underlayments to Receive Resilient Flooring
ASTM F1516	(2023) Standard Practice for Sealing Seams of Resilient Flooring Products by the Heat Weld Method (when Recommended)
ASTM F1869	(2023) Standard Test Method for Measuring Moisture Vapor Emission Rate of Concrete Subfloor Using Anhydrous Calcium Chloride
ASTM F2170	(2019a) Standard Test Method for Determining Relative Humidity in Concrete Floor Slabs Using in situ Probes

CALIFORNIA DEPARTMENT OF PUBLIC HEALTH (CDPH)

CDPH SECTION 01350	(2017; Version 1.2) Standard Method for the Testing and Evaluation of Volatile Organic Chemical Emissions from Indoor

	Sources using Environmental Chambers
CSA GROUP (CSA)	
CSA Z809-16	(R2021) Sustainable Forest Management
FOREST STEWARDSHIP COUNCIL (FSC)	
FSC STD 01 001	(2015) Principles and Criteria for Forest Stewardship
GREEN SEAL (GS)	
GS-36	(2013) Adhesives for Commercial Use
NATIONAL FIRE PROTECTION ASSOCIATION (NFPA)	
NFPA 253	(2011) Standard Method of Test for Critical Radiant Flux of Floor Covering Systems Using a Radiant Heat Energy Source
PROGRAMME FOR ENDORSEMENT OF FOREST CERTIFICATION (PEFC)	
PEFC ST 2002:2013	(2015) PEFC International Standard Chain of Custody of Forest Based Products Requirements
SCIENTIFIC CERTIFICATION SYSTEMS (SCS)	
SCS	SCS Global Services (SCS) Indoor Advantage
SOCIETY FOR PROTECTIVE COATINGS (SSPC)	
SSPC Guide 21	(2015) Guide to Evaluation of Slip and Fall Resistance of Flooring Surfaces
SOUTH COAST AIR QUALITY MANAGEMENT DISTRICT (SCAQMD)	
SCAQMD Rule 1168	(2022) Adhesive and Sealant Applications
SUSTAINABLE FOREST INITIATIVE (SFI)	
SFI 22	(2022) Standards and Rules for Forest Management, Fiber Sourcing, Chain of Custody, and Certified Sourcing
TILE COUNCIL OF NORTH AMERICA (TCNA)	
TCNA A326.3	(2022) American National Standard Test Method for Measuring Dynamic Coefficient of Friction of Hard Surface Flooring Materials
UL SOLUTIONS (UL)	
UL 2818	(2022) GREENGUARD Certification Program For Chemical Emissions For Building Materials, Finishes And Furnishings

1.2 SUBMITTALS

Government approval is required for submittals with a "G" or "S" classification. Submittals not having a "G" or "S" classification are for information only. When used, a code following the "G" classification identifies the office that will review the submittal for the Government. Submit the following in accordance with Section 01 33 00 SUBMITTAL PROCEDURES:

SD-02 Shop Drawings

Resilient Flooring and Accessories;

SD-03 Product Data

Resilient Flooring and Accessories;

Adhesives

Sheet Vinyl Flooring

Recycled content for Sheet Vinyl Flooring; S

Mouldings

SD-04 Samples

Resilient Flooring and Accessories;

SD-06 Test Reports

Moisture, Alkalinity, and Bond Tests;

SD-07 Certificates

Indoor Air Quality for Sheet Vinyl Flooring; S

Indoor Air Quality for Adhesives; S

SD-08 Manufacturer's Instructions

Surface Preparation;

Installation;

SD-10 Operation and Maintenance Data

Resilient Flooring and Accessories;

1.3 CERTIFICATES

1.3.1 Indoor Air Quality

Submit required indoor air quality certifications and validations in one submittal package.

1.3.1.1 Floor Covering Materials

Provide Sheet Vinyl Flooring, and wall base products certified to meet indoor air quality requirements by FLOORSCORE, UL 2818 (Greenguard) Gold, SCS Global Services Indoor Advantage Gold or provide certification by other third-party programs. Provide current product certification

documentation from certification body.

1.3.1.2 Adhesives, Caulking, and Sealants

Provide asbestos-free products certified to meet indoor air quality requirements by UL 2818 (Greenguard) Gold, SCS Global Services Indoor Advantage Gold or provide certification or validation by other third-party programs that products meet the requirements of this Section. Provide current product certification documentation from certification body. When product does not have certification, provide validation that product meets the indoor air quality product requirements cited herein.

1.3.2 Certified Sustainably Harvested Wood

Provide wood certified as sustainably harvested by FSC STD 01 001, ATFS STANDARDS, CSA Z809-16, SFI 22 Standards and Rules, or other third party program certified by PEFC ST 2002:2013. Provide a letter of Certification of Sustainably Harvested Wood signed by the wood supplier. Identify certifying organization and their third party program name and indicate compliance with chain-of-custody program requirements. Submit sustainable wood certification data; identify each certified product on a line item basis. Submit copies of invoices bearing certification numbers.

1.4 DELIVERY, STORAGE, AND HANDLING

Deliver materials to the building site in original unopened containers bearing the manufacturer's name, style name, pattern color name and number, production run, project identification, and handling instructions. Store materials in a clean, dry, secure, and well-ventilated area with ambient air temperature maintained above 68 degrees F and below 85 degrees F, stacked according to manufacturer's recommendations. Protect materials from the direct flow of heat from hot-air registers, radiators and other heating fixtures and appliances. Observe ventilation and safety procedures specified in the MSDS. Do not store near materials that may offgas or emit harmful fumes, such as kerosene heaters, fresh paint, or adhesives.

1.5 ENVIRONMENTAL REQUIREMENTS

Maintain areas to receive resilient flooring at a temperature above 70 degrees F and below 85 degrees F for 3 days before application, during application and 2 days after application, unless otherwise directed by the flooring manufacturer for the flooring being installed. Maintain a minimum temperature of 55 degrees F thereafter. Provide adequate ventilation to remove moisture from area and to comply with regulations limiting concentrations of hazardous vapors.

1.6 SCHEDULING

Schedule resilient flooring application after the completion of other work which would damage the finished surface of the flooring.

1.7 WARRANTY

Provide manufacturer's standard performance guarantees or warranties that extend beyond a one year period.

1.8 EXTRA MATERIALS

Provide extra flooring material of each color and pattern at the rate of 5

square feet for each 1000 square feet of sheet flooring installed. Provide extra wall base material composed of 20 linear feet of each type, color and pattern. Package all extra materials in original properly marked containers bearing the manufacturer's name, brand name, pattern color name and number, production run, and handling instructions. Provide extra materials from the same lot as those installed. Leave extra stock at the site in location assigned by Contracting Officer.

PART 2 PRODUCTS

2.1 SHEET VINYL FLOORING

Conform to ASTM F1303, Type II, Grade 1, Class B nonfoamed plastic backing (minimum wear layer thickness 0.050 inch and minimum overall thickness 0.080 inch) and a minimum 6 feet wide. Extend color and pattern throughout the thickness of the wear layer. As required, provide welding rods as recommended by the manufacturer for heat welding of joints.

Provide certification of indoor air quality for Sheet Vinyl Flooring.

2.2 MOULDINGS

Provide tapered mouldings of vinyl and types as recommended by flooring manufacturer for both edges and transitions of flooring materials specified. Provide vertical lip on moulding of maximum 1/4 inch. Provide bevel change in level between 1/4 and 1/2 inch with a slope no greater than 1:2.

2.3 ADHESIVES

Provide asbestos-free adhesives for flooring, base and accessories as recommended by the manufacturer and comply with local indoor air quality standards. Submit manufacturer's descriptive data, documentation stating physical characteristics, and mildew and germicidal characteristics.

Provide non-aerosol adhesive products used on the interior of the building (defined as inside of the weatherproofing system) that meet either emissions requirements of CDPH SECTION 01350 (limit requirements for either office or classroom spaces regardless of space type) or VOC content requirements of SCAQMD Rule 1168. Provide aerosol adhesives used on the interior of the building that meet either emissions requirements of CDPH SECTION 01350 (use the office or classroom requirements, regardless of space type) or VOC content requirements of GS-36. Provide certification or validation of indoor air quality for adhesives.

2.4 SURFACE PREPARATION MATERIALS

Provide asbestos-free surface preparation materials, such as panel type underlayment, lining felt, leveling compounds, and floor crack fillers as recommended by the flooring manufacturer for the subfloor conditions. Comply with ASTM D5603 and ASTM F1482 for panel type underlayment products.

2.5 POLISH/FINISH

Provide polish finish as recommended by the manufacturer and conform to ASTM D4078 for polish. Confirm that polish finishes meet dry and wet coefficient of friction per TCNA A326.3,SSPC Guide 21, as applicable.

2.6 CAULKING AND SEALANTS

Provide asbestos-free caulking and sealants in accordance with Section 07 92 00 JOINT SEALANTS.

2.7 ACCESSORIES

Provide accessories necessary to complete transitions, coves, terminations, caps, accent bands, and trim as recommended by the resilient flooring and accessories manufacturers in writing.

2.8 MANUFACTURER'S COLOR, PATTERN, AND TEXTURE

Provide color, pattern and texture for resilient flooring and accessories selected from manufacturer's standard colors . Provide flooring in any one continuous area or replacement of damaged flooring in continuous area from same production run with same shade and pattern. Submit scaled drawings indicating patterns (including location of patterns and colors) and dimensions. Submit manufacturer's descriptive data and three samples of each indicated color and type of flooring, base, mouldings, heat welding bead, and accessories sized a minimum 6 by 9 inch. Submit welded-seam samples of seamless-installation with resilient flooring and accessories samples for each seamless resilient sheet type, color, and pattern; place seam at center of 6 by 9 inch sample run lengthwise with sample applied over a board prepared by the flooring installer. Submit Data Package 1 in accordance with Section 01 78 23 OPERATION AND MAINTENANCE DATA.

2.9 FIRE RESISTANCE TESTING REQUIREMENTS

Provide a minimum average critical radiant flux of 0.45 watts per square centimeter for flooring in corridors and exits when tested in accordance with ASTM E648 or NFPA 253.

PART 3 EXECUTION

3.1 EXAMINATION

Examine and verify that site conditions are in agreement with the design package. Report all conditions that will prevent a proper installation. Do not take any corrective action without written permission from the Government. Work will proceed only when conditions have been corrected and accepted by the installer. Submit manufacturer's printed installation instructions for all flooring materials and accessories, including preparation of substrate, seaming techniques, and recommended adhesives.

3.2 SURFACE PREPARATION

Provide a smooth, true, level plane for surface preparation of the flooring, except where indicated as sloped. Floor to be flat to within 3/16 inch in 10 feet. Prepare subfloor in accordance with flooring manufacturer's printed instructions. Prepare the surfaces of lightweight concrete slabs (as defined by the flooring manufacturer) as recommended by the flooring manufacturer. Comply with ASTM F710 for concrete subfloor preparation. Floor fills or toppings may be required as recommended by the flooring manufacturer. Install underlayments, when required by the flooring manufacturer, in accordance with manufacturer's printed installation instructions. Comply with ASTM F1482 for panel type underlayments. Before any work under this section is begun, correct all defects such as rough or scaling concrete, chalk and dust, cracks, low spots, high spots, and uneven surfaces. Repair all damaged portions of

concrete slabs as recommended by the flooring manufacturer. Remove concrete curing and sealer compounds from the slabs, other than the type that does not adversely affect adhesion. Remove paint, varnish, oils, release agents, sealers, waxes, and adhesives, as required by the flooring product in accordance with manufacturer's printed installation instructions.

3.3 MOISTURE, ALKALINITY, AND BOND TESTS

Determine the suitability of the concrete subfloor for receiving the resilient flooring with regard to moisture content and pH level by moisture and alkalinity tests. Conduct moisture testing in accordance with ASTM F1869 or ASTM F2170, unless otherwise recommended by the flooring manufacturer. Conduct alkalinity testing as recommended by the flooring manufacturer. Determine the compatibility of the resilient flooring adhesives to the concrete floors by a bond test in accordance with the flooring manufacturer's printed installation instructions. Submit copy of test reports for moisture and alkalinity content of concrete slab, and bond test stating date of test, person conducting the test, and the area tested.

3.4 GENERAL INSTALLATION

Do not install building construction materials that show visual evidence of biological growth.

Comply with manufacturer's written instructions for installing resilient sheet flooring and for unrolling and stabilizing flooring materials prior to installation. Minimize the number of seams in sheet flooring, especially in high traffic or conspicuous locations. Avoid cross seams.

3.5 PLACING LUXURY VINYL TILES

Install flooring and accessories in accordance with manufacturer's printed installation instructions. Prepare and apply adhesives in accordance with manufacturer's printed installation instructions for installation method specified. Keep tile lines and joints square, symmetrical, tight, and even. Keep each floor in true, level plane, except where slope is indicated. Vary edge width as necessary to maintain full-size tiles in the field, no edge tile to be less than one-half the field tile size, except where irregular shaped rooms make it impossible. Cut flooring to fit around all permanent fixtures, built-in furniture and cabinets, pipes, and outlets. Cut, fit, and scribe edge tile to walls and partitions after field flooring has been applied.

3.6 PLACING SHEET VINYL FLOORING

Install sheet vinyl flooring and accessories in accordance with manufacturer's printed installation instructions and ASTM F1516. Prepare and apply adhesives in accordance with manufacturer's printed installation instructions. Provide square, symmetrical, tight, and even flooring lines and joints. Keep each floor in true, level plane, except where slope is indicated. Cut flooring to fit around all permanent fixtures, built-in furniture and cabinets, pipes, and outlets. Lay out sheets to minimize waste. Cut, fit, and scribe flooring to walls and partitions after field flooring has been applied. Provide heat welded seams and edges in accordance with the manufacturer's printed installation instructions. Finish joints flush, free from voids, recesses, and raised areas.

3.7 PLACING MOULDINGS

Provide mouldings where flooring termination is higher than the adjacent finished flooring and at transitions between different flooring materials. When required, locate mouldings under door centerline. Mouldings are not required at doorways where thresholds are provided. Secure mouldings with adhesive as recommended by the manufacturer. Prepare and apply adhesives in accordance with manufacturer's printed installation instructions.

3.8 CLEANING

Immediately upon completion of installation of flooring in a room or an area, dry and clean the flooring and adjacent surfaces to remove all surplus adhesive. Clean flooring as recommended in accordance with manufacturer's printed maintenance instructions and within the recommended time frame. As required by the manufacturer, apply the recommended number of coats and type of polish and finish in accordance with manufacturer's printed instructions.

3.9 PROTECTION

From the time of installation until acceptance, protect flooring from damage as recommended by the flooring manufacturer. Remove and replace flooring which becomes damaged, loose, broken, or curled and wall base which is not tight to wall or securely adhered.

-- End of Section --

SECTION 09 68 00

CARPETING
11/24

PART 1 GENERAL

1.1 REFERENCES

The publications listed below form a part of this specification to the extent referenced. The publications are referred to within the text by the basic designation only.

AMERICAN ASSOCIATION OF TEXTILE CHEMISTS AND COLORISTS (AATCC)

AATCC 16.1	(2023) Test Method for Colorfastness to Light: Outdoor
AATCC 107	(2013) Colorfastness to Water
AATCC 134	(2016) Electrostatic Propensity of Carpets
AATCC 165	(2021; E 2024) Colorfastness to Crocking: Textile Floor Coverings - Crockmeter Method
AATCC 174	(2016) Antimicrobial Activity Assessment of New Carpets

ASTM INTERNATIONAL (ASTM)

ASTM D297	(2021) Rubber Products - Chemical Analysis
ASTM D1335	(2017; E 2018) Standard Test Method for Tuft Bind of Pile Yarn Floor Coverings
ASTM D2646	(2024) Standard Guide for Backing Fabric Characteristics of Pile Yarn Floor Coverings
ASTM D2859	(2016) Standard Test Method for Ignition Characteristics of Finished Textile Floor Covering Materials
ASTM D3278	(2021) Standard Test Methods for Flash Point of Liquids by Small Scale Closed-Cup Apparatus
ASTM D3676	(2013) Rubber Cellular Cushion Used for Carpet or Rug Underlay
ASTM D3936	(2021) Standard Test Method for Resistance to Delamination of the Secondary Backing of Pile Yarn Floor Covering
ASTM D7330	(2015) Standard Test Method for Assessment of Surface Appearance Change in Pile Floor Coverings Using Standard Reference Scales

ASTM E648	(2023) Standard Test Method for Critical Radiant Flux of Floor-Covering Systems Using a Radiant Heat Energy Source
ASTM F1869	(2023) Standard Test Method for Measuring Moisture Vapor Emission Rate of Concrete Subfloor Using Anhydrous Calcium Chloride
ASTM F2170	(2019a) Standard Test Method for Determining Relative Humidity in Concrete Floor Slabs Using in situ Probes

CALIFORNIA DEPARTMENT OF PUBLIC HEALTH (CDPH)

CDPH SECTION 01350	(2017; Version 1.2) Standard Method for the Testing and Evaluation of Volatile Organic Chemical Emissions from Indoor Sources using Environmental Chambers

CARPET AND RUG INSTITUTE (CRI)

CRI 104	(2015) Carpet Installation Standard for Commercial Carpet
CRI 105	(2015) Carpet Installation Standard for Residential Carpet
CRI GLP QM	(2017) Green Label Plus Quality Manual
CRI Test Method 103	(2015) Standard Test Method for the Evaluation of Texture Appearance Retention of Carpet Standards Program

GREEN SEAL (GS)

GS-36	(2013) Adhesives for Commercial Use

INTERNATIONAL ORGANIZATION FOR STANDARDIZATION (ISO)

ISO 2551	(2020) Textile Floor Coverings and Textile Floor Coverings in Tile Form-Determination of Dimensional Changes Due to the Effects of Varied Water and Heat Conditions and Distortion Out of Plane

NATIONAL FIRE PROTECTION ASSOCIATION (NFPA)

NFPA 253	(2011) Standard Method of Test for Critical Radiant Flux of Floor Covering Systems Using a Radiant Heat Energy Source

NSF INTERNATIONAL (NSF)

NSF/ANSI 140	(2019) Sustainability Assessment for Carpet

SCIENTIFIC CERTIFICATION SYSTEMS (SCS)

SCS	SCS Global Services (SCS) Indoor Advantage

SOUTH COAST AIR QUALITY MANAGEMENT DISTRICT (SCAQMD)

SCAQMD Rule 1113	(2016) Architectural Coatings
SCAQMD Rule 1168	(2022) Adhesive and Sealant Applications

U.S. NATIONAL ARCHIVES AND RECORDS ADMINISTRATION (NARA)

16 CFR 1630	Standard for the Surface Flammability of Carpets and Rugs (FF 1-70)

UL SOLUTIONS (UL)

UL 2818	(2022) GREENGUARD Certification Program For Chemical Emissions For Building Materials, Finishes And Furnishings

1.2 SUBMITTALS

Government approval is required for submittals with a "G" or "S" classification. Submittals not having a "G" or "S" classification are for Contractor Quality Control approval. Submittals not having a "G" or "S" classification are for information only. When used, a code following the "G" classification identifies the office that will review the submittal for the Government. Submit the following in accordance with Section 01 33 00 SUBMITTAL PROCEDURES:

SD-02 Shop Drawings

Installation Drawings;

SD-03 Product Data

Carpet;

Textile Composite Carpet;

Carpet Cushion;

Recycled Content for Carpeting; S

Recycled Content for Fiber Cushion; S

Recycled Content for Rubber Cushion; S

Recycled Content for Polyurethane-Foam Cushion; S

Recycled Content for Textile Composite Carpet; S

Moldings;

Indoor Air Quality for Aerosol Adhesives; S

Indoor Air Quality for Non-Aerosol Adhesives; S

Indoor Air Quality for Concrete Primer; S

SD-04 Samples

Carpet;

Textile Composite Carpet;

Carpet Cushion;

Moldings;

Sustainable Product Certifications; S

SD-06 Test Reports

Moisture and Alkalinity Tests;

SD-07 Certificates

Indoor Air Quality for Carpet; S

Indoor Air Quality for Textile Composite Carpet; S

Indoor Air Quality for Fiber Cushion; S

Indoor Air Quality for Rubber Cushion; S

Indoor Air Quality for Polyurethane-Foam Cushion; S

SD-08 Manufacturer's Instructions

Surface Preparation

SD-10 Operation and Maintenance Data

Cleaning and Protection

Maintenance Service

SD-11 Closeout Submittals

Warranty

1.3 CERTIFICATIONS

1.3.1 Indoor Air Quality Certifications

1.3.1.1 Floor Covering Materials

Provide carpet, and cushion, and textile composite carpet products certified to meet indoor air quality requirements by UL 2818 (GreenGuard) Gold, SCS Global Services Indoor Advantage Gold, CRI GLP QM or provide certification or validation by other third-party program that products meet the requirements of this Section. Provide current product certification documentation from certification body. When product does not have certification, provide validation that product meets the indoor air quality product requirements cited herein.

1.4 DELIVERY, STORAGE, AND HANDLING

Deliver materials to the site in the manufacturer's original wrappings and packages clearly labeled with the manufacturer's name, brand name, size,

dye lot number, and related information. Remove materials from packaging and store them in a clean, dry, well ventilated area (100 percent outside air supply, minimum of 1.5 air changes per hour, and no recirculation), protected from damage, soiling, and moisture, and strong contaminant sources and residues, and maintain at a temperature above 60 degrees F for 2 days prior to installation. Do not store carpet or modular carpet tiles with materials which have high emissions of volatile organic compounds (VOCs) or other contaminants, including paints and adhesives. Do not store carpet near materials that may off gas or emit harmful fumes, such as kerosene heaters, fresh paint, or adhesives.

1.5 AMBIENT CONDITIONS

Maintain areas in which carpeting is to be installed at a temperature above 60 degrees F and below 90 degrees F for 2 days before installation, during installation, and for 2 days after installation. Provide temporary ventilation during work of this section. Maintain a minimum temperature of 55 degrees F thereafter for the duration of the contract.

1.6 WARRANTY

Provide manufacturer's standard performance guarantees or warranties including minimum ten year wear warranty, two year material and workmanship and ten year tuft bind and delamination.

PART 2 PRODUCTS

2.1 CARPET

Furnish first quality carpet that is free of visual blemishes, streaks, poorly dyed areas, fuzzing of pile yarn, spots or stains, and other physical and manufacturing defects. Provide carpet materials and treatments as reasonably nonallergenic and free of other recognized health hazards. Provide a static control construction on all grade carpets which gives adequate durability and performance. Submit manufacturer's catalog data and printed documentation stating physical characteristics, durability, resistance to fading, and flame resistance characteristics for each type of carpet material and installation accessory. Submit manufacturer's Product Data for a.) Carpet, b.) Moldings, c.) Carpet Cushion, and d.) Textile Composite Carpet. Also, submit Samples of the following:

a. Carpet: Two "Production Quality" samples 18 by 18 inches of each carpet proposed for use, showing quality, pattern, and color specified

b. Moldings: Two samples of each type minimum 12 inches long

c. Carpet Cushion: Two samples minimum 6 by 6 inches

d. Textile Composite Carpet: Two samples minimum 18 by 18 inches

2.1.1 Recycled Content

Carpeting must contain a minimum of 20 percent recycled content. Provide data identifying percentage of recycled content for carpeting and recycled content for textile composite carpet.

2.1.2 PFOS/PFOA Requirements

Provide materials free from perfluorooctanesulfonic acid (PFOS) or perfluorooctanoic acid (PFOA).

2.1.3 Indoor Air Quality Requirements

Products must meet emissions requirements of CDPH SECTION 01350. Provide certification or validation of indoor air quality for carpet indoor air quality for textile composite carpet.

2.1.4 Sustainable Product Certifications

Submit sustainable product certifications per NSF/ANSI 140.

2.1.5 Physical Characteristics for Modular TileEntrance Carpet

2.1.5.1 Carpet Construction

Woven Composite

2.1.5.2 Type

Modular carpet tile 24 by 24 inch square with 0.15 percent growth/shrink rate in accordance with ISO 2551.

2.1.5.3 Backing Materials

Provide primary backing materials like those customarily used and accepted by the trade for each type of carpet . Provide secondary backing to suit project requirements of those customarily used and accepted by the trade for each type of carpet.

2.1.5.4 Attached Cushion

Provide an attached cushion chemically frothed polyurethane with minimum weight of 18 oz/sq. yard, minimum density of 11 lb/cubic foot . Do not exceed the maximum ash content of 50 percent when tested in accordance with ASTM D297. Pass the accelerated aging test in accordance with ASTM D3676 for the cushion.

2.2 PERFORMANCE REQUIREMENTS

2.2.1 Texture Appearance Retention Rating (TARR)

Provide carpet with a greater than or equal to 3.5 (Severe) TARR traffic level classification in accordance with ASTM D7330 or CRI Test Method 103.

2.2.2 Static Control

Provide static control to permanently regulate static buildup to less than 2.0 kV when tested at 20 percent relative humidity and 70 degrees F in accordance with AATCC 134.

2.2.3 Flammability and Critical Radiant Flux Requirements

Comply with 16 CFR 1630 or ASTM D2859. Provide carpet in corridors and exits with a minimum average critical radiant flux of 0.22 watts per square centimeter when tested in accordance with ASTM E648 or NFPA 253.

2.2.4 Tuft Bind

Comply with ASTM D1335 for tuft bind force required to pull a tuft or loop free from carpet backing with a minimum 8 pound average force for modular carpet tile.

2.2.5 Colorfastness to Crocking

Comply dry and wet crocking with AATCC 165 and with a Class 4 minimum rating on the AATCC Color Transference Chart for all colors.

2.2.6 Colorfastness to Light

Comply colorfastness to light with AATCC 16.1, Test Option E "Water-Cooled Xenon-Arc Lamp, Continuous Light" and with a minimum 4 gray scale rating after 40 hours.

2.2.7 Colorfastness to Water

Comply colorfastness to water with AATCC 107 and with a minimum 4.0 gray scale rating and a minimum 4.0 transfer scale rating.

2.2.8 Breaking Strength

ASTM D2646 dry breaking strength, not less than 100 lbf.

2.2.9 Delamination Strength

Provide delamination ASTM D3936 strength for tufted carpet with a secondary back of minimum 3.5 lbs/inch.

2.2.10 Antimicrobial

Nontoxic antimicrobial treatment in accordance with AATCC 174 Part I (qualitative), guaranteed by the carpet manufacturer to last the life of the carpet.

2.3 CARPET CUSHION

2.3.1 Fiber Cushion

Resinated, recycled textile. Provide data identifying percentage of recycled content for fiber cushion.

Products must meet emissions requirements of CDPH SECTION 01350. Provide certification or validation of indoor air quality for fiber cushion.

2.3.1.1 Thickness

0.25 inches plus 5 percent maximum

2.3.2 Performance Requirements - Critical Radiant Flux

Provide carpet cushion in corridors and exits with a minimum average critical radiant flux of 0.22 watts per square centimeter when tested in accordance with ASTM E648.

2.4 ADHESIVES AND CONCRETE PRIMER

Comply with applicable regulations regarding toxic and hazardous materials. Provide water resistant, mildew resistant, nonflammable, and nonstaining adhesives and concrete primers for carpet installation as required by the carpet manufacturer. Provide release adhesive for modular tile carpet as recommended by the carpet manufacturer. Provide adhesives flashpoint of minimum 140 degrees F in accordance with ASTM D3278. Non-aerosol adhesive products used on the interior of the building (defined as inside of the weatherproofing system) must meet either emissions requirements of CDPH SECTION 01350 (limit requirements for either office or classroom spaces regardless of space type) or VOC content requirements of SCAQMD Rule 1168. Aerosol adhesive products used on the interior of the building (defined as inside of the weatherproofing system) must meet either emissions requirements of CDPH SECTION 01350 (limit requirements for either office or classroom spaces regardless of space type) or VOC content requirements of GS-36. Provide validation of indoor air quality for aerosol adhesives. Provide validation of indoor air quality for non-aerosol adhesives. Concrete primer products used on the interior of the building (defined as inside of the weatherproofing system) must meet either emissions requirements of CDPH SECTION 01350 (limit requirements for either office or classroom spaces regardless of space type) or VOC content requirements of SCAQMD Rule 1113. Provide validation of indoor air quality for concrete primer.

2.5 MOLDINGS

Provide carpet moldings where floor covering material changes or carpet edge does not abut a vertical surface. Provide an aluminum molding, pinless clamp-down type, designed for the type of carpet being installed. Provide natural color anodized

2.6 TAPE

Provide tape for seams as recommended by the carpet manufacturer for the type of seam used in broadloom installation. Seam sealant must have a maximum VOC content of no more than 50 grams/liter. Do not use sealants that contain 1,1,1-trichloroethane or toluene.

2.7 COLOR, TEXTURE, AND PATTERN

Provide color, texture, and pattern in accordance with the drawings .

PART 3 EXECUTION

3.1 SURFACE PREPARATION

Do not install carpet on surfaces that are unsuitable and will prevent a proper installation. Prepare subfloor in accordance with flooring manufacturer's recommended instructions. Repair holes, cracks, depressions, or rough areas using material recommended by the carpet or adhesive manufacturer. Free floor of any foreign materials and sweep clean. Before beginning work, test subfloor with glue and carpet to determine "open time" and bond. Submit three copies of the manufacturer's printed Installation instructions for the carpet, including Surface Preparation, seaming techniques, and recommended adhesives and tapes.

3.2 MOISTURE AND ALKALINITY TESTS

Test concrete slab for excessive moisture content and excessive alkalinity in accordance with CRI 104/CRI 105, ASTM F1869, and ASTM F2170. Submit three copies of reports of Moisture and Alkalinity Tests including content of concrete slab stating date of test, person conducting the test, and the area tested. Perform tests for each 200 sq. ft.. Perform a minimum of three evenly spaced tests of each installation area. For anhydrous calcium chloride test, confirm substrates have a moisture-vapor-emission rate less than 3 lb of water/1000 sq. ft.. For relative humidity tests confirm substrate relative humidity levels are less than 75 percent.

3.3 PREPARATION OF CONCRETE SUBFLOOR

Do not commence installation of the carpeting until concrete substrate is at least 90 days old. Prepare the concrete surfaces in accordance with the carpet manufacturer's instructions. Match carpet, when required, and adhesives to prevent off-gassing to a type of curing compounds, leveling agents, and concrete sealer.

3.4 INSTALLATION

Isolate area of installation from rest of building. Perform all work by manufacturer's approved installers. Conduct installation in accordance with the manufacturer's printed instructions and CRI 104/CRI 105. Protect edges of carpet meeting hard surface flooring with molding and install in accordance with the molding manufacturer's printed instructions. Use autofoam mothproofing system for wool carpets. Follow ventilation, personal protection, and other safety precautions recommended by the adhesive manufacturer. Continue ventilation during installation and for at least 72 hours following installation. Do not permit traffic or movement of furniture or equipment in carpeted area for 24 hours after installation. Complete other work which would damage the carpet prior to installation of carpet. Submit three copies of Installation Drawings for 1) Carpet, 2) Carpet Cushion, and 3) Moldings indicating areas receiving carpet, carpet types, patterns, direction of pile, location of seams, and locations of edge molding.

Do not install building construction materials that show visual evidence of biological growth.

3.4.1 Broadloom Installation

Install broadloom carpet direct glue down smooth, uniform, and secure, with a minimum of seams. Apply regular, unnoticeable, and treated seams with a seam adhesive. Run side seams toward the light, where practical, and where such layout does not increase the number of seams. Install breadths parallel, with carpet pile in the same direction. Match patterns accurately. Neatly cut and fit cutouts, at door jambs, columns and ducts securely. Locate seams at doorways parallel to and centered directly under doors. Do not make seams perpendicular to doors or at pivot points. Provide seams at changes in directions of corridors to follow the wall line parallel to the carpet direction. Lay the carpet lengthwise down the corridors with widths less than 6 feet.

3.4.2 Modular Tile Installation

Install modular tiles with manufacturer's adhesive tab system adhesive and snug joints. Use monolithic installation method. Comply with

manufacturer installation instructions for required drying time of releasable adhesive so it sets up properly. Provide accessibility to the subfloor where required. Modular carpet tile on stairs and sloped surfaces must be installed with a more permanent installation method in accordance with the manufacturer's instructions and with manufacturer recommended adhesives for this application. Install broadloom version of modular tile when available from the same manufacturer for use on stairs and sloped surfaces.

3.4.3 Entrance Carpet Installation

Install tiles with permanent vinyl-compatible adhesive and snug joints. Use monolithic installation method.

3.5 CLEANING AND PROTECTION

Submit three copies of carpet manufacturer's maintenance instructions describing recommended type of cleaning equipment and material, spotting and cleaning methods, and cleaning cycles.

3.5.1 Cleaning

As specified in Section 01 78 00 CLOSEOUT SUBMITTALS. After installation of the carpet, remove debris, scraps, and other foreign matter. Remove soiled spots and adhesive from the face of the carpet with appropriate spot remover. Cut off and remove protruding face yarn. Vacuum carpet clean with a high-efficiency particulate air (HEPA) filtration vacuum.

3.5.2 Protection

Protect the installed carpet from soiling and damage with heavy, reinforced, nonstaining kraft paper, plywood, or hardboard sheets. Lap and secure edges of kraft paper protection to provide a continuous cover. Restrict traffic for at least 48 hours. Remove protective covering when directed by the Contracting Officer.

3.6 REMNANTS

Manage waste as specified in the Waste Management Plan. . Remove non-retained scraps from site and recycle appropriately.

3.7 MAINTENANCE

3.7.1 Extra Materials

Provide extra material from same dye lot consisting of uncut modular carpet tiles for future maintenance. Provide a minimum of three percent of total square yards of each carpet type, pattern, and color. Furnish three percent extra of total adhesive tabs.

3.7.2 Maintenance Service

Collect information from the manufacturer about maintenance agreement options, and submit to Contracting Officer. Service must reclaim materials for recycling and/or reuse. Service must not landfill or burn reclaimed materials. When such a service is not available, seek local recyclers to reclaim the materials. Submit documentation of manufacturer's maintenance agreement take-back program for carpet. Include contact information, summary of procedures, and the limitations

and conditions applicable to the project. Indicate manufacturer's commitment to reclaim materials for recycling and reuse.

-- End of Section --

P2# 519087 - DSSC DLA Repair Building 27
Columbus, OH

SECTION 09 90 00

PAINTS AND COATINGS
02/21

PART 1 GENERAL

1.1 RELATED REQUIREMENTS

1.1.1 Painting Included

Where a space or surface is indicated to be painted, include the following unless indicated otherwise.

a. Surfaces behind portable objects and surface mounted articles readily detachable by removal of fasteners, such as screws and bolts.

b. New factory finished surfaces that require identification or color coding and factory finished surfaces that are damaged during performance of the work.

c. Existing coated surfaces that are damaged during performance of the work.

1.1.1.1 Exterior Painting

Includes new surfaces, existing coated surfaces, and existing uncoated surfaces, of the building and appurtenances. Also included are existing coated surfaces made bare by cleaning operations.

1.1.1.2 Interior Painting

Includes new surfaces, existing uncoated surfaces, and existing coated surfaces of the building and appurtenances as indicated and existing coated surfaces made bare by cleaning operations. Where a space or surface is indicated to be painted, include the following items, unless indicated otherwise.

a. Exposed columns, girders, beams, joists, and metal deck; and

b. Other contiguous surfaces.

1.1.2 Painting Excluded

Do not paint the following unless indicated otherwise.

a. Surfaces concealed and made inaccessible by panelboards, fixed ductwork, machinery, and equipment fixed in place.

b. Surfaces in concealed spaces. Concealed spaces are defined as enclosed spaces above suspended ceilings, furred spaces, attic spaces, crawl spaces, elevator shafts and chases.

c. Steel to be embedded in concrete.

d. Copper, stainless steel, aluminum, anodized aluminum, brass, and lead except existing coated surfaces.

e. Hardware, fittings, and other factory finished items.

1.1.3 Mechanical and Electrical Painting

Includes field coating of interior and exterior new and existing surfaces.

a. Where a space or surface is indicated to be painted, include the following items unless indicated otherwise.

(1) Exposed piping, conduit, and ductwork;

(2) Supports, hangers, air grilles, and registers;

(3) Miscellaneous metalwork and insulation coverings.

1.1.3.1 Fire Extinguishing Sprinkler Systems

Clean, pretreat, prime, and paint new fire extinguishing sprinkler systems including valves, piping, conduit, hangers, supports, miscellaneous metalwork, and accessories. Apply coatings to clean, dry surfaces, using clean brushes.

1.2 REFERENCES

The publications listed below form a part of this specification to the extent referenced. The publications are referred to within the text by the basic designation only.

AMERICAN CONFERENCE OF GOVERNMENTAL INDUSTRIAL HYGIENISTS (ACGIH)

ACGIH 0100	(2017; Suppl 2020) Documentation of the Threshold Limit Values and Biological Exposure Indices

ASTM INTERNATIONAL (ASTM)

ASTM C920	(2018) Standard Specification for Elastomeric Joint Sealants
ASTM D235	(2022) Standard Specification for Mineral Spirits (Petroleum Spirits) (Hydrocarbon Dry Cleaning Solvent)
ASTM D523	(2014; R 2018) Standard Test Method for Specular Gloss
ASTM D4214	(2007; R 2015) Standard Test Method for Evaluating the Degree of Chalking of Exterior Paint Films
ASTM D4263	(1983; R 2018) Standard Test Method for Indicating Moisture in Concrete by the Plastic Sheet Method
ASTM D4444	(2013; R 2018) Standard Test Method for Laboratory Standardization and Calibration of Hand-Held Moisture Meters
ASTM D6386	(2022) Standard Practice for Preparation

	of Zinc (Hot-Dip Galvanized) Coated Iron and Steel Product and Hardware Surfaces for Painting
ASTM F1869	(2023) Standard Test Method for Measuring Moisture Vapor Emission Rate of Concrete Subfloor Using Anhydrous Calcium Chloride

CENTERS FOR DISEASE CONTROL AND PREVENTION (CDC)

Intelligence Bulletin 65	(2013) Occupational Exposure to Carbon Nanotubes and Nanofibers

MASTER PAINTERS INSTITUTE (MPI)

MPI 101	(2016) Primer, Epoxy, Anti-Corrosive, for Metal
MPI 107	(2016) Primer, Rust-Inhibitive, Water Based
MPI ASM	(2019) Architectural Painting Specification Manual
MPI GPS-1-14	(2014) Green Performance Standard GPS-1-14
MPI GPS-2-14	(2014) Green Performance Standard GPS-2-14
MPI MRM	(2015) Maintenance Repainting Manual

SOCIETY FOR PROTECTIVE COATINGS (SSPC)

SSPC 7/NACE No.4	(2007) Brush-Off Blast Cleaning
SSPC Glossary	(2011) SSPC Protective Coatings Glossary
SSPC Guide 6	(2021) Guide for Containing Surface Preparation Debris Generated During Paint Removal Operations
SSPC Guide 7	(2015) Guide to the Disposal of Lead-Contaminated Surface Preparation Debris
SSPC PA 1	(2024) Shop, Field, and Maintenance Coating of Metals
SSPC SP 1	(2015) Solvent Cleaning
SSPC SP 2	(2018) Hand Tool Cleaning
SSPC SP 3	(2018) Power Tool Cleaning
SSPC SP 6/NACE No.3	(2007) Commercial Blast Cleaning
SSPC SP 10/NACE No. 2	(2015) Near-White Blast Cleaning
SSPC VIS 1	(2002; E 2004) Guide and Reference Photographs for Steel Surfaces Prepared by Dry Abrasive Blast Cleaning

SSPC VIS 3	(2004) Guide and Reference Photographs for Steel Surfaces Prepared by Hand and Power Tool Cleaning
SSPC VIS 4/NACE VIS 7	(1998; E 2000; E 2004) Guide and Reference Photographs for Steel Surfaces Prepared by Waterjetting
SSPC-SP WJ-1/NACE WJ-1	(2012) Clean to Bare Substrate, Waterjet Cleaning of Metals
SSPC-SP WJ-2/NACE WJ-2	(2012) Very Thorough Cleaning, Waterjet Cleaning of Metals
SSPC-SP WJ-3/NACE WJ-3	(2012) Thorough Cleaning, Waterjet Cleaning of Metals
SSPC-SP WJ-4/NACE WJ-4	(2012) Light Cleaning, Waterjet Cleaning of Metals

U.S. ARMY CORPS OF ENGINEERS (USACE)

EM 385-1-1	(2024) Safety -- Safety and Occupational Health (SOH) Requirements

U.S. GENERAL SERVICES ADMINISTRATION (GSA)

FED-STD-313	(2018) Material Safety Data, Transportation Data and Disposal Data for Hazardous Materials Furnished to Government Activities

U.S. NATIONAL ARCHIVES AND RECORDS ADMINISTRATION (NARA)

29 CFR 1910.1000	Air Contaminants
29 CFR 1910.1025	Lead
29 CFR 1926.62	Lead

1.3 DEFINITIONS

1.3.1 Qualification Testing

Qualification testing is the performance of all test requirements listed in the product specification. This testing is accomplished by MPI to qualify each product for the MPI Approved Product List, and may also be accomplished by Contractor's third-party testing lab if an alternative to Batch Quality Conformance Testing by MPI is desired.

1.3.2 Batch Quality Conformance Testing

Batch quality conformance testing determines that the product provided is the same as the product qualified to the appropriate product specification. This testing must be accomplished by an MPI testing lab.

1.3.3 Coating

SSPC Glossary; (1) A liquid, liquefiable, or mastic composition that is converted to a solid protective, decorative, or functional adherent film after application as a thin layer; (2) Generic term for paint, lacquer, enamel.

1.3.4 DFT or dft

Dry film thickness, the film thickness of the fully cured, dry paint or coating.

1.3.5 DSD

Degree of Surface Degradation, the MPI system of defining degree of surface degradation. Five levels are generically defined under the Assessment sections in the MPI MRM, MPI Maintenance Repainting Manual.

1.3.6 EXT

MPI short term designation for an exterior coating system.

1.3.7 INT

MPI short term designation for an interior coating system.

1.3.8 Loose Paint

Paint or coating that can be removed with a dull putty knife.

1.3.9 mil / mils

The English measurement for 0.001 in or one one-thousandth of an inch.

1.3.10 MPI Gloss Levels

MPI system of defining gloss. Seven gloss levels (G1 to G7) are generically defined under the Evaluation sections of the MPI Manuals. Traditionally, Flat refers to G1/G2, Eggshell refers to G3, Semigloss refers to G5, and Gloss refers to G6.

Gloss levels are defined by MPI as follows:

Gloss Level	Description	Units at 60 degree angle	Units at 80 degree angle
G1	Matte or Flat	0 to 5	10 max
G2	Velvet	0 to 10	10 to 35
G3	Eggshell	10 to 25	10 to 35
G4	Satin	20 to 35	35 min
G5	Semi-Gloss	35 to 70	
G6	Gloss	70 to 85	

Gloss Level	Description	Units at 60 degree angle	Units at 80 degree angle
G7	High Gloss		

Gloss is tested in accordance with ASTM D523. Historically, the Government has used Flat (G1 / G2), Eggshell (G3), Semi-Gloss (G5), and Gloss (G6).

1.3.11 MPI System Number

The MPI coating system number in each MPI Division found in either the MPI Architectural Painting Specification Manual or the Maintenance Repainting Manual and defined as an exterior (EXT/REX) or interior system (INT/RIN).

1.3.12 Paint

SSPC Glossary; (1) Any pigmented liquid, liquefiable, or mastic composition designed for application to a substrate in a thin layer that is converted to an opaque solid film after application. Used for protection, decoration, identification, or to serve some other functional purposes; (2) Application of a coating material.

1.3.13 REX

MPI short term designation for an exterior coating system used in repainting projects or over existing coating systems.

1.3.14 RIN

MPI short term designation for an interior coating system used in repainting projects or over existing coating systems.

1.4 SUBMITTALS

Government approval is required for submittals with a "G" or "S" classification. Submittals not having a "G" or "S" classification are for information only. When used, a code following the "G" classification identifies the office that will review the submittal for the Government. Submit the following in accordance with Section 01 33 00 SUBMITTAL PROCEDURES:

Samples of specified materials may be taken and tested for compliance with specification requirements.

SD-02 Shop Drawings

Piping Identification

SD-03 Product Data

Coating;

Product Data Sheets

Sealant

SD-04 Samples

Color;

Textured Wall Coating System;

SD-07 Certificates

Qualification Testing laboratory for coatings;

Indoor Air Quality for Paints and Primers

Indoor Air Quality for Consolidated Latex Paints

SD-08 Manufacturer's Instructions

Application Instructions

Mixing

Manufacturer's Safety Data Sheets

SD-10 Operation and Maintenance Data

Coatings, Data Package 1;

1.5 QUALITY ASSURANCE

1.5.1 Regulatory Requirements

1.5.1.1 Environmental Protection

In addition to requirements specified elsewhere for environmental protection, provide coating materials that conform to the restrictions of the local Air Pollution Control District and regional jurisdiction. Notify Contracting Officer of any paint specified herein which fails to conform.

1.5.1.2 Lead Content

Do not use coatings having a lead content over 0.06 percent by weight of nonvolatile content.

1.5.1.3 Chromate Content

Do not use coatings containing zinc-chromate or strontium-chromate.

1.5.1.4 Asbestos Content

Provide asbestos-free materials.

1.5.1.5 Mercury Content

Provide materials free of mercury or mercury compounds.

1.5.1.6 Silica

Provide abrasive blast media containing no free crystalline silica.

1.5.1.7 Human Carcinogens

Provide materials that do not contain ACGIH 0100 confirmed human carcinogens (A1) or suspected human carcinogens (A2).

1.5.1.8 Carbon Based Fibers / Tubes

Materials must not contain carbon based fibers such as carbon nanotubes or carbon nanofibers. Intelligence Bulletin 65 ranks toxicity of carbon nanotubes on a par with asbestos.

1.5.2 Coating Contractor's Qualification

Submit the name, address, telephone number, and e-mail address of the Contractor that will be performing all surface preparation and coating application. Submit evidence that key personnel have successfully performed surface preparation and application of coatings on on a minimum of three similar projects within the past three years. List information by individual and include the following:

a. Name of individual and proposed position for this work.

b. Information about each previous assignment including:

Position or responsibility

Employer (if other than the Contractor)

Name of facility owner

Mailing address and telephone number of facility owner

Name of individual in facility owner's organization who can be contacted as a reference

Location, size and description of structure

Dates work was carried out

Description of work carried out on structure

1.5.3 Approved Products List

The current MPI, "Approved Product List" which lists paint by brand, label, product name and product code as of the date of Contract award, will be used to determine compliance with the submittal requirements of this specification. The Contractor may choose to use a subsequent MPI "Approved Product List", however, only one list may be used for the entire Contract and each coating system is to be from a single manufacturer. Provide all coats on a particular substrate from a single manufacturer. No variation from the MPI Approved Products List is acceptable.

1.5.4 Paints and Coatings Indoor Air Quality Certifications

Provide paint and coating products certified to meet indoor air quality requirements by MPI GPS-1-14, MPI GPS-2-14 or provide certification by other third-party programs. Provide current product certification documentation from certification body.

Provide certification of Indoor Air Quality for Paints and Primers. Provide certification of Indoor Air Quality for Consolidated Latex Paints. Submit required indoor air quality certifications in one submittal package.

1.5.5 Field Samples and Tests

The Contracting Officer may choose up to two coatings that have been delivered to the site to be tested at no cost to the Government. Take samples of each chosen product as specified in the paragraph SAMPLING PROCEDURE. Test each chosen product as specified in the paragraph TESTING PROCEDURE. Remove products from the job site which do not conform, and replace with new products that conform to the referenced specification. Test replacement products that failed initial testing as specified in the paragraph TESTING PROCEDURE at no cost to the Government.

1.5.5.1 Sampling Procedure

Select paint at random from the products that have been delivered to the job site for sample testing. The Contractor must provide one quart samples of the selected paint materials. Take samples in the presence of the Contracting Officer, and label, and identify each sample. Provide labels in accordance with the paragraph PACKAGING, LABELING, AND STORAGE.

1.5.5.2 Testing Procedure

Provide Batch Quality Conformance Testing for specified products, as defined by and performed by MPI. As an alternative to Batch Quality Conformance Testing, the Contractor may provide Qualification Testing for specified products above to the appropriate MPI product specification, using the third-party laboratory approved under the paragraph QUALIFICATION TESTING laboratory for coatings. Include the backup data and summary of the test results within the qualification testing lab report. Provide a summary listing of all the reference specification requirements and the result of each test. Clearly indicate in the summary whether the tested paint meets each test requirement. Note that Qualification Testing may take 4 to 6 weeks to perform, due to the extent of testing required.

Submit name, address, telephone number, FAX number, and e-mail address of the independent third party laboratory selected to perform testing of coating samples for compliance with specification requirements. Submit documentation that laboratory is regularly engaged in testing of paint samples for conformance with specifications, and that employees performing testing are qualified. If MPI is chosen to perform the Batch Quality Conformance testing, the above submittal information is not required, only a letter is required from the Contractor stating that MPI will perform the testing.

1.5.6 Textured Wall Coating System

Three complete samples of each indicated type, pattern, and color of textured wall coating system applied to a panel of the same material as that on which the coating system will be applied in the work. Provide samples of wall coating systems minimum 5 by 7 inches and of sufficient size to show pattern repeat and texture.

1.5.7 Sample Textured Wall Coating System Mock-Up

After coating samples are approved and prior to starting installation, provide a minimum 8 foot by 8 foot mock-up for each substrate and for each color and type of textured wall coating using the actual substrate materials. Use the approved mock-up samples as a standard of workmanship for installation within the facility. Submit at least 48 hour advance written notice to the Contracting Officer's Representative prior to mock-up installation.

1.6 PACKAGING, LABELING, AND STORAGE

Provide paints in sealed containers that legibly show the Contract specification number, designation name, formula or specification number, batch number, color, quantity, date of manufacture, manufacturer's formulation number, manufacturer's directions including any warnings and special precautions, and name and address of manufacturer. Furnish pigmented paints in containers not larger than 5 gallons. Store paints and thinners in accordance with the manufacturer's written directions, and as a minimum, stored off the ground, under cover, with sufficient ventilation to prevent the buildup of flammable vapors, and at temperatures between 40 to 95 degrees F.

1.7 SAFETY AND HEALTH

Comply with applicable Federal, State, and local laws and regulations, and with the ACCIDENT PREVENTION PLAN, including the Activity Hazard Analysis as specified in Section 01 35 26 GOVERNMENTAL SAFETY REQUIREMENTS and in Appendix A of EM 385-1-1. Include in the Activity Hazard Analysis the potential impact of painting operations on painting personnel and on others involved in and adjacent to the work zone.

1.7.1 Toxic Materials

To protect personnel from overexposure to toxic materials, conform to the most stringent guidance of:

a. The applicable manufacturer's Safety Data Sheets (SDS) or local regulation.

b. 29 CFR 1910.1000.

c. ACGIH 0100, threshold limit values.

d. The appropriate OSHA standard in 29 CFR 1910.1025 and 29 CFR 1926.62 for surface preparation on painted surfaces containing lead. Removal and disposal of coatings which contain lead is specified in Section 02 83 00 LEAD REMEDIATION. Additional guidance is given in SSPC Guide 6 and SSPC Guide 7. Refer to drawings for list of hazardous materials located on this project. Coordinate paint preparation activities with this specification section.

Submit manufacturer's Safety Data Sheets for coatings, solvents, and other potentially hazardous materials, as defined in FED-STD-313.

1.8 ENVIRONMENTAL REQUIREMENTS

Comply, at minimum, with manufacturer recommendations for space ventilation during and after installation.

1.8.1 Coatings

Do not apply coating when air or substrate conditions are:

a. Less than 5 degrees F above dew point;

b. Below 50 degrees F or over 95 degrees F, unless specifically pre-approved by the Contracting Officer and the product manufacturer. Do not, under any circumstances, violate the manufacturer's application recommendations.

PART 2 PRODUCTS

2.1 MATERIALS

Conform to the coating specifications and standards referenced in PART 3. Submit Product Data Sheets for specified coatings and solvents. Provide preprinted cleaning and maintenance instructions for all coating systems. Submit Manufacturer's Instructions on Mixing: Detailed mixing instructions, minimum and maximum application temperature and humidity, pot life, and curing and drying times between coats.

2.2 COLOR SELECTION OF FINISH COATS

Provide colors of finish coats as indicated or specified. Allow Contracting Officer to select colors not indicated or specified. Manufacturers' names and color identification are used for the purpose of color identification only. Named products are acceptable for use only if they conform to specified requirements. Products of other manufacturers are acceptable if the colors are approximately the colors indicated and the product conforms to specified requirements.

Provide color, texture, and pattern of wall coating systems in accordance with Section 09 06 00 SCHEDULES FOR FINISHES . Submit manufacturer's samples of paint colors. Cross reference color samples to color scheme as indicated. Submit color stencil codes. Tint each coat progressively darker to enable confirmation of the number of coats.

PART 3 EXECUTION

3.1 PROTECTION OF AREAS AND SPACES NOT TO BE PAINTED

Prior to surface preparation and coating applications, remove, mask, or otherwise protect hardware, hardware accessories, machined surfaces, radiator covers, plates, lighting fixtures, public and private property, and other such items not to be coated that are in contact with surfaces to be coated. Following completion of painting, reinstall removed items by workmen skilled in the trades. Restore surfaces contaminated by coating materials, to original condition and repair damaged items.

3.2 REPUTTYING AND REGLAZING

Remove cracked, loose, and defective putty or glazing compound on glazed sash and provide new putty or glazing compound. Where defective putty or glazing compound constitutes 30 percent or more of the putty at any one light, remove the glass and putty or glazing compound and reset the glass. Remove putty or glazing compound without damaging sash or glass. Clean rabbets to bare wood or metal and prime prior to reglazing. Provide

linseed oil putty for wood sash. Patch surfaces to provide smooth transition between existing and new surfaces. Finish putty or glazing compound to a neat and true bead. Allow glazing compound time to cure, in accordance with manufacturer's recommendation, prior to coating application. Allow putty to set one week prior to coating application.

3.3 RESEALING OF EXISTING EXTERIOR JOINTS

3.3.1 Surface Condition

Begin with surfaces that are clean, dry to the touch, and free from frost and moisture; remove grease, oil, wax, lacquer, paint, defective backstop, or other foreign matter that would prevent or impair adhesion. Where adequate grooves have not been provided, clean out to a depth of 1/2 inch and grind to a minimum width of 1/4 inch without damage to adjoining work. Grinding is not required on metal surfaces.

3.3.2 Backstops

In joints more than 1/2 inch deep, install glass fiber roving or neoprene, butyl, polyurethane, or polyethylene foams free of oil or other staining elements as recommended by sealant manufacturer. Provide backstop material compatible with sealant. Do not use oakum and other types of absorptive materials as backstops.

3.3.3 Primer and Bond Breaker

Install the type recommended by the sealant manufacturer.

3.3.4 Ambient Temperature

Between 38 degrees F and 95 degrees F when applying sealant.

3.3.5 Exterior Sealant

For joints in vertical surfaces, provide ASTM C920, Type S or M, Grade NS, Class 25, Use NT. For joints in horizontal surfaces, provide ASTM C920, Type S or M, Grade P, Class 25, Use T. Color(s) will be selected by the Contracting Officer. Apply the sealant in accordance with the manufacturer's printed instructions. Force sealant into joints with sufficient pressure to fill the joints solidly. Apply sealant uniformly smooth and free of wrinkles.

3.3.6 Cleaning

Immediately remove fresh sealant from adjacent areas using a solvent recommended by the sealant manufacturer. Upon completion of sealant application, remove remaining smears and stains and leave the work in a clean condition. Allow sealant time to cure, in accordance with manufacturer's recommendations, prior to coating.

3.4 SURFACE PREPARATION

Remove dirt, splinters, loose particles, grease, oil, disintegrated coatings, and other foreign matter and substances deleterious to coating performance as specified for each substrate before application of paint or surface treatments. Remove oil and grease prior to mechanical cleaning. Schedule cleaning so that dust and other contaminants will not fall on wet, newly painted surfaces. Spot-prime exposed ferrous metals such as

nail heads on or in contact with surfaces to be painted with water-thinned paints, with a suitable corrosion-inhibitive primer capable of preventing flash rusting and compatible with the coating specified for the adjacent areas. Refer to MPI ASM and MPI MRM for additional more specific substrate preparation requirements.

3.4.1 Additional Requirements for Preparation of Surfaces With Existing Coatings

Before application of coatings, perform the following on surfaces covered by soundly-adhered coatings, defined as those which cannot be removed with a putty knife:

a. Test existing finishes for lead before sanding, scraping, or removing. If lead is present, refer to paragraph Toxic Materials.

b. Wipe previously painted surfaces to receive solvent-based coatings, except stucco and similarly rough surfaces clean with a clean, dry cloth saturated with mineral spirits, ASTM D235 or as specified in MPI MRM. Wipe the surfaces dry with a clean, dry, lint free cloth. Wipe immediately preceding the application of the first coat of any coating, unless specified otherwise.

c. Sand existing glossy surfaces to be painted to reduce gloss. Brush, and wipe clean with a damp cloth to remove dust.

d. The requirements specified are minimum. Comply also with the application instructions of the paint manufacturer and specific surface preparation requirements as outlined in MPI MRM Exterior Surface Preparation and Interior Surface Preparation.

e. Thoroughly clean previously painted surfaces damaged during construction of all grease, dirt, dust or other foreign matter.

f. Remove blistering, cracking, flaking and peeling or otherwise deteriorated coatings.

g. Remove chalk so that when tested in accordance with ASTM D4214, the chalk resistance rating is no less than 8.

h. Roughen slick surfaces. Repair damaged areas such as, but not limited to, nail holes, cracks, chips, and spalls with suitable material to match adjacent undamaged areas.

i. Feather and sand smooth edges of chipped paint.

j. Clean rusty metal surfaces in accordance with SSPC requirements. Use solvent, mechanical, or chemical cleaning methods to provide surfaces suitable for painting.

k. Provide new, proposed coatings that are compatible with existing coatings.

3.4.2 Existing Coated Surfaces with Minor Defects

Sand, spackle, and treat minor defects to render them smooth. Minor defects are defined as scratches, nicks, cracks, gouges, spalls, alligatoring, chalking, and irregularities due to partial peeling of previous coatings. Remove chalking by sanding so that when tested in

accordance with ASTM D4214, the chalk rating is not less than 8.

3.4.3 Substrate Repair

a. Repair substrate surface damaged during coating removal;

b. Sand edges of adjacent soundly-adhered existing coatings so they are tapered as smooth as practical to areas involved with coating removal; and

c. Clean and prime the substrate as specified.

3.5 PREPARATION OF METAL SURFACES

3.5.1 Existing and New Ferrous Surfaces

a. Ferrous Surfaces including Shop-coated Surfaces and Small Areas That Contain Rust, Mill Scale and Other Foreign Substances: Solvent clean or detergent wash in accordance with SSPC SP 1 to remove oil and grease. Where shop coat is missing or damaged, clean according to SSPC SP 2, or . Brush-off blast remaining surface in accordance with SSPC 7/NACE No.4; Protect shop-coated ferrous surfaces from corrosion by treating and touching up corroded areas immediately upon detection.

b. Surfaces With More Than 20 Percent Rust, Mill Scale, and Other Foreign Substances: Clean entire surface in accordance with SSPC SP 6/NACE No.3 / SSPC-SP WJ-3/NACE WJ-3.

3.5.2 Final Ferrous Surface Condition:

3.5.2.1 Tool Cleaned Surfaces

Comply with SSPC SP 2 and SSPC SP 3. Use as a visual reference, photographs in SSPC VIS 3 for the appearance of cleaned surfaces.

3.5.2.2 Abrasive Blast Cleaned Surfaces

Comply with SSPC 7/NACE No.4, SSPC SP 6/NACE No.3, and SSPC SP 10/NACE No. 2. Use as a visual reference, photographs in SSPC VIS 1 for the appearance of cleaned surfaces.

3.5.2.3 Waterjet Cleaned Surfaces

Comply with SSPC-SP WJ-1/NACE WJ-1, SSPC-SP WJ-2/NACE WJ-2, SSPC-SP WJ-3/NACE WJ-3 or SSPC-SP WJ-4/NACE WJ-4. Use as a visual reference, photographs in SSPC VIS 4/NACE VIS 7 for the appearance of cleaned surfaces.

3.5.3 Galvanized Surfaces

a. New or Existing Galvanized Surfaces With Only Dirt and Zinc Oxidation Products: Clean with solvent, in accordance with SSPC SP 1. Completely remove coating by brush-off abrasive blast if the galvanized metal has been passivated or stabilized. Do not "passivate" or "stabilize" new galvanized steel to be coated. If the absence of hexavalent stain inhibitors is not documented, test as described in ASTM D6386, Appendix X2, and remove by one of the methods described therein.

b. Galvanized with Slight Coating Deterioration or with Little or No Rusting: Water jetting to SSPC-SP WJ-3/NACE WJ-3 to remove loose coating from surfaces with less than 20 percent coating deterioration and no blistering, peeling, or cracking. Use inhibitor as recommended by the coating manufacturer to prevent rusting.

c. Galvanized With Severe Deteriorated Coating or Severe Rusting: Spot abrasive blast rusted areas as described for steel in SSPC SP 6/NACE No.3, and waterjet to SSPC-SP WJ-3/NACE WJ-3 to remove existing coating.

3.5.4 Non-Ferrous Metallic Surfaces

Aluminum and aluminum-alloy, lead, copper, and other nonferrous metal surfaces.

Surface Cleaning: Solvent clean in accordance with SSPC SP 1 and wash with mild non-alkaline detergent to remove dirt and water soluble contaminants.

3.5.5 Terne-Coated Metal Surfaces

Solvent clean surfaces with mineral spirits, ASTM D235. Wipe dry with clean, dry cloths.

3.5.6 Existing Surfaces with a Bituminous or Mastic-Type Coating

Remove chalk, mildew, and other loose material by washing with a solution of 1/2 cup trisodium phosphate, 1/4 cup household detergent, one quart 5 percent sodium hypochlorite solution and 3 quarts of warm water.

3.6 PREPARATION OF CONCRETE AND CEMENTITIOUS SURFACE

3.6.1 Concrete and Masonry

a. Curing: Allow concrete, stucco and masonry surfaces to cure at least 30 days before painting, and concrete slab on grade to cure at least 90 days before painting.

b. Surface Cleaning: Remove the following deleterious substances.

(1) Dirt, Chalking, Grease, and Oil: Wash new and existing uncoated surfaces with a solution composed of 1/2 cup trisodium phosphate, 1/4 cup household detergent, and 4 quarts of warm water. Then rinse thoroughly with fresh water. Wash existing coated surfaces with a suitable detergent and rinse thoroughly. For large areas, water blasting may be used.

(2) Fungus and Mold: Wash surfaces with a solution composed of 1/2 cup trisodium phosphate, 1/4 cup household detergent, one quart 5 percent sodium hypochlorite solution and 3 quarts of warm water. Rinse thoroughly with fresh water.

(3) Paint and Loose Particles: Remove by wire brushing.

(4) Efflorescence: Remove by scraping or wire brushing followed by washing with a 5 to 10 percent by weight aqueous solution of hydrochloric (muriatic) acid. Do not allow acid to remain on the surface for more than five minutes before rinsing with fresh

water. Do not acid clean more than 4 square feet of surface, per workman, at one time.

c. Cosmetic Repair of Minor Defects: Repair or fill mortar joints and minor defects, including but not limited to spalls, in accordance with manufacturer's recommendations and prior to coating application.

d. Allowable Moisture Content: Latex coatings may be applied to damp surfaces, but not to surfaces with droplets of water. Do not apply epoxies to damp vertical surfaces as determined by ASTM D4263 or horizontal surfaces that exceed 3 lbs of moisture per 1000 square feet in 24 hours as determined by ASTM F1869. In all cases follow manufacturer's recommendations. Allow surfaces to cure a minimum of 30 days before painting.

3.6.2 Gypsum Board, Plaster, and Stucco

3.6.2.1 Surface Cleaning

Verify that plaster and stucco surfaces are free from loose matter and that gypsum board is dry. Remove loose dirt and dust by brushing with a soft brush, rubbing with a dry cloth, or vacuum-cleaning prior to application of the first coat material. A damp cloth or sponge may be used if paint is water-based.

3.6.2.2 Repair of Minor Defects

Prior to painting, repair joints, cracks, holes, surface irregularities, and other minor defects with patching plaster or spackling compound and sand smooth.

3.6.2.3 Allowable Moisture Content

Latex coatings may be applied to damp surfaces, but not surfaces with droplets of water. Do not apply epoxies to damp surfaces as determined by ASTM D4263. Verify that new plaster to be coated has a maximum moisture content of 8 percent, when measured in accordance with ASTM D4444, Method A, unless otherwise authorized. In addition to moisture content requirements, allow new plaster to age a minimum of 30 days before preparation for painting.

3.7 APPLICATION

3.7.1 Coating Application

a. Comply with applicable federal, state and local laws enacted to ensure compliance with Federal Clean Air Standards. Apply coating materials in accordance with SSPC PA 1. SSPC PA 1 methods are applicable to all substrates, except as modified herein.

b. At the time of application, paint must show no signs of deterioration. Maintain uniform suspension of pigments during application.

c. Unless otherwise specified or recommended by the paint manufacturer, paint may be applied by brush, roller, or spray. Use trigger operated spray nozzles for water hoses. Use rollers for applying paints and enamels of a type designed for the coating to be applied and the surface to be coated. Wear protective clothing and respirators when

applying oil-based paints or using spray equipment with any paints.

d. Only apply paints, except water-thinned types, to surfaces that are completely free of moisture as determined by sight or touch.

e. Thoroughly work coating materials into joints, crevices, and open spaces. Pay special attention to ensure that all edges, corners, crevices, welds, and rivets receive a film thickness equal to that of adjacent painted surfaces.

f. Apply each coat of paint so that dry film is of uniform thickness and free from runs, drops, ridges, waves, pinholes or other voids, laps, brush marks, and variations in color, texture, and finish. Completely hide all blemishes.

g. Touch up damaged coatings before applying subsequent coats. Broom clean and clear dust from interior areas before and during the application of coating material.

m. Drying Time: Allow time between coats, as recommended by the coating manufacturer, to permit thorough drying, but not to present topcoat adhesion problems. Provide each coat in specified condition to receive next coat.

n. Primers, and Intermediate Coats: Do not allow primers or intermediate coats to dry more than 30 days, or longer than recommended by manufacturer, before applying subsequent coats. Follow manufacturer's recommendations for surface preparation if primers or intermediate coats are allowed to dry longer than recommended by manufacturers of subsequent coatings. Cover each preceding coat or surface completely by ensuring visually perceptible difference in shades of successive coats.

o. Finished Surfaces: Provide finished surfaces free from runs, drops, ridges, waves, laps, brush marks, and variations in colors.

p. Thermosetting Paints: Apply topcoats over thermosetting paints (epoxies and urethanes) within the overcoat window recommended by the manufacturer.

q. Floors:

3.7.2 Mixing and Thinning of Paints

Reduce paints to proper consistency by adding fresh paint, except when thinning is mandatory to suit surface, temperature, weather conditions, application methods, or for the type of paint being used. Obtain written permission from the Contracting Officer to use thinners. Verify that the written permission includes quantities and types of thinners to use.

When thinning is allowed, thin paints immediately prior to application with not more than one pint of suitable thinner per gallon. The use of thinner does not relieve the Contractor from obtaining complete hiding, full film thickness, or required gloss. Thinning cannot cause the paint to exceed limits on volatile organic compounds. Do not mix paints of different manufacturers.

3.7.3 Two-Component Systems

Mix two-component systems in accordance with manufacturer's instructions. Follow recommendation by the manufacturer for any thinning of the first coat to ensure proper penetration and sealing for each type of substrate.

3.7.4 Coating Systems

a. Systems by Substrates: Apply coatings that conform to the respective specifications listed in the following Tables:

Table for Exterior Applications	
MPI Division	Substrate Application
MPI Division 3	Exterior Concrete Paint Table
MPI Division 4	Exterior Concrete Masonry Units Paint Table
MPI Division 5	Exterior Metal, Ferrous and Non-Ferrous Paint Table
MPI Division 6	Exterior Wood; Dressed Lumber, Paneling, Decking, Shingles Paint Table
MPI Division 9	Exterior Stucco Paint Table
MPI Division 10	Exterior Cloth Coverings and Bituminous Coated Surfaces Paint Table

Table for Interior Applications	
MPI Division	Substrate Application
MPI Division 3	Interior Concrete Paint Table
MPI Division 4	Interior Concrete Masonry Units Paint Table
MPI Division 5	Interior Metal, Ferrous and Non-Ferrous Paint Table
MPI Division 6	Interior Wood Paint Table
MPI Division 9	Interior Plaster, Gypsum Board, Textured Surfaces Paint Table

b. Minimum Dry Film Thickness (DFT): Apply paints, primers, varnishes, enamels, undercoats, and other coatings to a minimum dry film thickness of 1.5 mil each coat unless specified otherwise in the Tables. Coating thickness, where specified, refers to the minimum dry film thickness.

c. Coatings for Surfaces Not Specified Otherwise: Coat unspecified surfaces the same as surfaces having similar conditions of exposure.

d. Existing Surfaces Damaged During Performance of the Work, Including New Patches In Existing Surfaces: Coat surfaces with the following:

(1) One coat of primer.

(2) One coat of undercoat or intermediate coat.

(3) One topcoat to match adjacent surfaces.

e. Existing Coated Surfaces To Be Painted: Apply coatings conforming to the respective specifications listed in the Tables herein, except that pretreatments, sealers and fillers need not be provided on surfaces where existing coatings are soundly adhered and in good condition. Do not omit undercoats or primers.

3.8 COATING SYSTEMS FOR METAL

Apply coatings of Tables in MPI Division 5 for Exterior and Interior.

a. Apply specified ferrous metal primer to steel surfaces on the same day that surface is cleaned, to surfaces that meet all specified surface preparation requirements at time of application.

b. Inaccessible Surfaces: Prior to erection, use one coat of specified primer on metal surfaces that will be inaccessible after erection.

c. Shop-primed Surfaces: Touch up exposed substrates and damaged coatings to protect from rusting prior to applying field primer.

d. Surface Previously Coated with Epoxy or Urethane: Apply MPI 101, 1.5 mils DFT immediately prior to application of epoxy or urethane coatings.

e. Pipes and Tubing: The semitransparent film applied to some pipes and tubing at the mill is not to be considered a shop coat. Overcoat these items with the specified ferrous-metal primer prior to application of finish coats.

f. Exposed Nails, Screws, Fasteners, and Miscellaneous Ferrous Surfaces. On surfaces to be coated with water thinned coatings, spot prime exposed nails and other ferrous metal with latex primer MPI 107.

3.9 COATING SYSTEMS FOR CONCRETE AND CEMENTITIOUS SUBSTRATES

Apply coatings of Tables in MPI Division 3, 4 and 9 for Exterior and Interior.

3.10 COATING SYSTEMS FOR WOOD AND PLYWOOD

a. Apply coatings of Tables in MPI Division 6 for Exterior and Interior.

b. Prior to erection, apply two coats of specified primer to treat and prime wood and plywood surfaces which will be inaccessible after erection.

c. Apply stains in accordance with manufacturer's printed instructions.

3.11 INSPECTION AND ACCEPTANCE

In addition to meeting previously specified requirements, demonstrate mobility of moving components, including swinging and sliding doors,

cabinets, and windows with operable sash, for inspection by the Contracting Officer. Perform this demonstration after appropriate curing and drying times of coatings have elapsed and prior to invoicing for final payment.

3.12 WASTE MANAGEMENT

As specified in the Waste Management Plan and as follows. Do not use kerosene or any such organic solvents to clean up water based paints. Properly dispose of paints or solvents in designated containers. Close and seal partially used containers of paint to maintain quality as necessary for reuse. Store in protected, well-ventilated, fire-safe area at moderate temperature. Place materials defined as hazardous or toxic waste in designated containers. Coordinate with manufacturer for take-back program. Set aside scrap to be returned to manufacturer for recycling into new product. When such a service is not available, contact local recyclers to reclaim the materials. Set aside extra paint for future color matches or reuse by the Government. Where local options exist for leftover paint recycling, collect all waste paint by type and provide for delivery to recycling or collection facility for reuse by local organizations.

3.13 PAINT TABLES

All DFT's are minimum values. Acceptable products are listed in the MPI Green Approved Products List, available at https://www.mpi.net/APL/index.asp.

-- End of Section --

P2# 519087 - DSSC DLA Repair Building 27
Columbus, OH

SECTION 10 14 00.20

INTERIOR SIGNAGE
08/20

PART 1 GENERAL

1.1 REFERENCES

The publications listed below form a part of this specification to the extent referenced. The publications are referred to in the text by basic designation only.

INTERNATIONAL CODE COUNCIL (ICC)

ICC/ANSI A117.1	(2009) Accessible and Usable Buildings and Facilities

NATIONAL ELECTRICAL MANUFACTURERS ASSOCIATION (NEMA)

ANSI/NEMA LD 3	(2005) Standard for High-Pressure Decorative Laminates

NATIONAL FIRE PROTECTION ASSOCIATION (NFPA)

NFPA 101	(2024) Life Safety Code

U.S. NATIONAL ARCHIVES AND RECORDS ADMINISTRATION (NARA)

36 CFR 1191	Americans with Disabilities Act (ADA) Accessibility Guidelines for Buildings and Facilities; Architectural Barriers Act (ABA) Accessibility Guidelines

1.2 SUBMITTALS

Government approval is required for submittals with a "G" or "S" classification. Submittals not having a "G" or "S" classification are for information only. When used, a code following the "G" classification identifies the office that will review the submittal for the Government. Submit the following in accordance with Section 01 33 00 SUBMITTAL PROCEDURES:

SD-02 Shop Drawings

Detail Drawings;

SD-03 Product Data

Room Identification And Directional Signage System;

Exit Door Tactile Sign;

Door Tags;

SD-04 Samples

Interior Signage;

Room Identification And Directional Signage System;

Stair Signage;

Exit Door Tactile Sign;

Door Tags;

SD-10 Operation and Maintenance Data

Approved Manufacturer's Instructions;

Protection and Cleaning;

1.3 QUALITY ASSURANCE

1.3.1 Samples

Submit interior signage samples of each of the following sign types showing typical quality, workmanship and color: all sign types included in project , , , Door Tags, , , , . Approved samples may be installed in the work, provided each sample is identified and location recorded.

1.3.2 Detail Drawings

Submit detail drawings showing elevations of each type of sign, dimensions, details and methods of mounting or anchoring, mounting height, shape and thickness of materials, and details of construction. Include a schedule showing the location, each sign type, and message.

1.3.3 Sign Fabricator

Sign Fabricator to follow room number strategies created by designer. The room numbering system to be reviewed and approved by the Contracting Officer and command end users during the shop drawing phase, and prior to fabrication.

1.4 DELIVERY, STORAGE, AND HANDLING

Package materials to prevent damage and deterioration during shipment, handling, storage and installation. Deliver products to the jobsite in manufacturer's original packaging and store in a clean, dry area in accordance with manufacturer's instructions.

1.5 WARRANTY

Provide manufacturer's warranty to repair or replace defective interior signage materials and workmanship for a period of 2 years from date of final acceptance of the work.

PART 2 PRODUCTS

2.1 ROOM IDENTIFICATION AND DIRECTIONAL SIGNAGE SYSTEM

Provide signs that are standard products of manufacturers regularly engaged in the manufacture of such products that essentially duplicate signs that have been in satisfactory use at least 2 years prior to bid opening. Obtain signage from a single manufacturer with edges and corners of finished letter forms and graphics true and clean.

2.1.1 Standard Room Signs

Provide signs that include tactile letters, symbols and Braille for interior rooms or spaces where the sign is not likely to change over time. Tactile text descriptions are required for pictograms that are provided to identify a permanent room. Examples include interior signs that label restrooms, stairs, room numbers or letters, and room names. These permanent room signs can include paper inserts for updatable information.

2.1.1.1 Tactile Letters, Symbols and Braille

Provide ADA compliant material per 36 CFR 1191 which is raised 1/32 inch from the first surface, has a minimum 5/8 inch in height and is an ADA acceptable font. The color of the tactile letters is required to contrast with the sign face color per ADA standards. The ADA required Braille has a minimum durometer reading of 90. All raised letters, numbers and symbols are to comply.

2.1.2 Type of Mounting for Signs

Provide surface mounted signs mounted with countersunk mounting holes in plaques and mounting screws. Secure inserts in holders . Mount framed plaques with manufacturer's standard (1/6 inch) 1.59 mm thick closed cell vinyl foam with adhesive backing. Adhesive must be transparent, long aging, high tech formulation on two sides of the vinyl foam. Double-faced tape consisting of acrylic adhesive on polyurethane foam used in conjunction with silicone adhesive . Provide signs with aluminum ceiling/projecting mount attachment extrusion to secure to ceiling or wall surface, along with matting ceiling/projecting mount track extrusion for hanging, projecting, and double-sided signs. Provide mounting for ceiling/projecting mount attachment extrusion by mechanical fasteners, selected based on wall or ceiling conditions. Mount track extrusion hinges over width of mount attachment and secured with 3.5 by 0.06 mm (6-32 inch) by 6 mm (1/4 inch) cone point stainless steel set screws.

2.1.3 Character Proportions and Heights

Letters and numbers on signs conform to 36 CFR 1191.

2.2 ROOM IDENTIFICATION SIGN WITH PATIENT INFORMATION2.2.1 Sign Faces

Provide sign faces of clear acrylic or PETG plastic with 0.125 inch thickness minimum, with dimensions of sign face being manufacturer's standard . Sign faces can be direct printed and contain two window openings for acrylic inserts; include a space for ADA compliant room tactile and Braille. Sign faces may also have approved printed logos for

brand recognition.2.3 EXIT DOOR TACTILE SIGN

Provide tactile sign with the message EXIT at each exit door that requires an exit sign to conform with NFPA 101. Sign tactile message is to comply with ICC/ANSI A117.1.

2.4 DOOR TAGS

Provide one door tag plate for each room entry door. In size as indicated on drawings. Provide room number as determined by Contracting Officer.

2.4.1 Engraved Copy

Machine engrave letters, numbers, symbols, and other graphics into panel sign on face to produce precisely formed copy and sharp images, incised to uniform depth. Melamine plastic engraving stock used for ADA compliant graphic is three-ply lamination contrasting color core meeting ASTM D635.

2.5 MATERIALS

2.5.1 Organic Coating

Organic coating conforms to AAMA 2604, with total dry film thickness not less than 1.2 mils.

2.5.2 Plastic Laminate Sheet

ANSI/NEMA LD 3, general purpose HGS grade, 0.048 inch nominal thickness.

2.5.3 Fabrication and Manufacture

2.5.3.1 Factory Workmanship

Holes for bolts and screws are drilled or punched. Drilling and punching produces clean, true lines and surfaces. Exposed surfaces of work have a smooth finish; exposed riveting is flush. Conceal fastenings where practicable.

2.5.3.2 Dissimilar Materials

Where dissimilar metals are in contact, protect surfaces prevent galvanic or corrosive action.

2.5.4 Typeface

ADA-ABA compliant font for Room SignsHelvetica Neue.

2.6 GRAPHICS

Provide signage graphics for modular signs to the following:

2.6.1 Photopolymer

Integral graphics and Braille achieved by photomechanical stratification processes. Provide photopolymer used for ADA compliant graphics of the type that has a minimum durometer reading of 90. Tactile graphics are raised 1/32 inch from the first surface of plaque by photomechanical stratification process.

2.7 COLOR, FINISH, AND CONTRAST

Provide color as selected by Contracting Office from standard manufacturer's colors.. Finish of eggshell, matte, or other non-glare finish for all signs as required in handicapped-accessible buildings.

PART 3 EXECUTION

3.1 INSTALLATION

Install signs plumb and true and in accordance with approved manufacturer's instructions at locations shown on the detail drawings . Submit operating instructions outlining the step-by-step procedures required for system operation. The instructions include simplified diagrams for the system as installed, the manufacturer's name, model number, service manual, parts list, and brief description of all equipment and their basic operating features. Provide each set permanently bound with a hard cover. The following identification must be inscribed on the covers: "OPERATING AND MAINTENANCE INSTRUCTIONS", name and location of the facility, name of the Contractor, and contract number. Submit in accordance with Section 01 78 23 OPERATING AND MAINTENANCE DATA. Mounting height and mounting location complies with 36 CFR 1191. Install required blocking. Do not install signs on doors or other surfaces until finishes on such surfaces have been installed. Signs installed on glass surfaces are installed with matching blank back-up plates in accordance with manufacturer's instructions.

Do not install items that show visual evidence of biological growth.

3.1.1 Anchorage

Provide anchorage in accordance with approved manufacturer's instructions. Anchorage not otherwise specified or shown includes slotted inserts, expansion shields, and powder-driven fasteners when approved for concrete; toggle bolts and through bolts for masonry; machine carriage bolts for steel; lag bolts and screws for wood. Provide exposed anchor and fastener materials compatible with metal to which applied with matching color and finish.

a. Signs mounted to painted gypsum board surfaces must be removable for painting maintenance.

b. Mount signs to lay-in ceiling grids with clip connections to ceiling tees.

c. Install signs mounted on metal surfaces with magnetic tape.

d. Install signs mounted on fabric surfaces with hook and loop tape or pin mount.

e. Install signs to workstation panels with panel clips.

3.1.2 Protection and Cleaning

Protect the work against damage during construction. Adjust hardware and electrical equipment for proper operation. Clean glass, frames, and other sign surfaces at completion of signage installation in accordance with the manufacturer's written instructions.

P2# 519087 - DSSC DLA Repair Building 27
Columbus, OH

-- End of Section --

SECTION 10 26 00

WALL AND DOOR PROTECTION
08/20

PART 1 GENERAL

1.1 REFERENCES

The publications listed below form a part of this specification to the extent referenced. The publications are referred to within the text by the basic designation only.

ASTM INTERNATIONAL (ASTM)

ASTM A167	(2011) Standard Specification for Stainless and Heat-Resisting Chromium-Nickel Steel Plate, Sheet, and Strip

CALIFORNIA DEPARTMENT OF PUBLIC HEALTH (CDPH)

CDPH SECTION 01350	(2017; Version 1.2) Standard Method for the Testing and Evaluation of Volatile Organic Chemical Emissions from Indoor Sources using Environmental Chambers

GREEN SEAL (GS)

GS-36	(2013) Adhesives for Commercial Use

SCIENTIFIC CERTIFICATION SYSTEMS (SCS)

SCS	SCS Global Services (SCS) Indoor Advantage

SOUTH COAST AIR QUALITY MANAGEMENT DISTRICT (SCAQMD)

SCAQMD Rule 1168	(2022) Adhesive and Sealant Applications

UL SOLUTIONS (UL)

UL 2818	(2022) GREENGUARD Certification Program For Chemical Emissions For Building Materials, Finishes And Furnishings

1.2 SUBMITTALS

Government approval is required for submittals with a "G" or "S" classification. Submittals not having a "G" or "S" classification are for Contractor Quality Control approval. Submittals not having a "G" or "S" classification are for information only. When used, a code following the "G" classification identifies the office that will review the submittal for the Government. Submit the following in accordance with Section 01 33 00 SUBMITTAL PROCEDURES:

SD-02 Shop Drawings

Corner Guards;

SD-03 Product Data

Corner Guards;

Recycled content for steel component of corner guards; S

SD-04 Samples

Corner Guards;

SD-07 Certificates

Indoor air quality for adhesives; S

SD-10 Operation and Maintenance Data

Corner Guards, Data Package 1;

1.3 CERTIFICATIONS

1.3.1 Indoor Air Quality

1.3.1.1 Wall Covering and Panels

Provide sheet and high impact resistant resilient materials certified to meet indoor air quality requirements by UL 2818 (Greenguard) Gold, SCS Global Services Indoor Advantage Gold or provide certification or validation by other third-party program that products meet the requirements of this section. Provide current product certification documentation from certification body.

1.3.1.2 Adhesives and Sealants

Provide products certified to meet indoor air quality requirements by UL 2818 (Greenguard) Gold, SCS Global Services Indoor Advantage Gold or provide certification or validation by other third-party program that products meet the requirements of this section. Provide current product certification documentation from certification body. When product does not have certification, provide validation that product meets the indoor air quality product requirements cited herein.

1.4 DELIVERY, STORAGE, AND HANDLING

Deliver materials to the project site in manufacturer's original unopened containers with seals unbroken and labels and trademarks intact. Keep materials dry, protected from weather and damage, and stored under cover. Store materials at approximately 70 degrees F for at least 48 hours prior to installation.

1.5 WARRANTY

Provide manufacturer's warranty to repair or replace defective materials and workmanship for a 1 year period of one year from date of final

acceptance of the work.

PART 2 PRODUCTS

2.1 STANDARD PRODUCTS

To the maximum extent possible, provide wall and door protection items that are standard products of a single manufacturer and furnished as detailed. Drawings show general configuration of products required.

Submit detailed shop drawings of each wall and door protection item indicated. Include elevations, dimensions, clearances, details of construction and anchorage, and details of joints and connections.

Submit manufacturers' descriptive product data for each wall and door protection item indicated. Include manufacturers' literature, finishes, profiles and thicknesses of materials.

Submit manufacturers' operations and maintenance data for each wall and door protection item indicated in accordance with Section 01 78 23 OPERATIONS AND MAINTENANCE DATA.

2.2 CORNER GUARDS

2.2.1 Stainless Steel Corner Guards

Provide stainless steel base material that contains a minimum of 60 percent recycled content. Provide data identifying percentage of recycled content for steel component of corner guards. Fabricate stainless steel base material of 16 gauge thick material conforming to ASTM A167, type 430 or 304. Provide corner guards that are 4feet high. Form corner guard to dimensions shown.

2.3 FINISH

Submit samples indicating color and texture of materials requiring color and finish.

2.3.1 Stainless Steel Finish

Provide stainless steel finish in accordance with ASTM A167, Type 302 or 304, finish number 4.

2.4 ADHESIVES

Provide adhesive for resilient material in accordance with manufacturers recommendations. Provide sealants and non-aerosol adhesive products used on the interior of the building (defined as inside of the weatherproofing system) that meet either emissions requirements of CDPH SECTION 01350 (limit requirements for either office or classroom spaces regardless of space type) the VOC content requirements of SCAQMD Rule 1168, or VOC content requirements of GS-36. Provide certification of indoor air quality for adhesives.

PART 3 EXECUTION

3.1 INSTALLATION

Do not install items that show visual evidence of biological growth.

Install items on surfaces that are clean, smooth, and free of obstructions.

3.1.1 Corner Guards and Wall Guards

a. Mount guards as indicated and in accordance with manufacturer's written installation instructions.

b. For wall guards, space brackets at no more than 3 feet on centers and anchor to the wall in accordance with the manufacturer's written installation instructions.

3.1.1.1 Stainless Steel Guards

a. Mount guards as indicated and in accordance with manufacturer's recommendations.

b. Where corner guards are installed on gypsum board, clean surfaces and anchor guards with a neoprene solvent-type contact adhesive specifically manufactured for use on gypsum board construction. Remove excess adhesive from the guard edges and allow to cure undisturbed for 24 hours.

-- End of Section --

P2# 519087 - DSSC DLA Repair Building 27
Columbus, OH

SECTION 10 28 13

TOILET ACCESSORIES
08/20

PART 1 GENERAL

1.1 REFERENCES

The publications listed below form a part of this specification to the extent referenced. The publications are referred to within the text by the basic designation only.

U.S. DEPARTMENT OF DEFENSE (DOD)

MIL-STD-1691 (1994; Rev F; Notice 1 2024) Construction and Material Schedule for Military Medical and Dental Facilities

1.2 SUBMITTALS

Government approval is required for submittals with a "G" or "S" classification. Submittals not having a "G" or "S" classification are for information only. When used, a code following the "G" classification identifies the office that will review the submittal for the Government. Submit the following in accordance with Section 01 33 00 SUBMITTAL PROCEDURES:

SD-02 Shop Drawings

Product Schedule;

Submit product Schedule indicating types, quantities, sizes, and installation locations by room for each toilet accessory item required. Identify locations using room designations indicated on the drawings.

SD-03 Product Data

Recycled content for stainless steel toilet accessories; S

Item A5145 Hook, Garment, Double, SS, Surface Mounted;

Submit catalog numbers, literature, data sheets, construction details, profiles, anchoring and mounting requirements and other pertinent data for each toilet accessory item to evaluate function, materials, dimensions and appearance.

SD-07 Certificates

Baby Changing Stations

SD-10 Operation and Maintenance Data

Item A5145 Hook, Garment, Double, SS, Surface Mounted;

Submit Data Package 1 for each toilet accessory item in accordance with Section 01 78 23 OPERATIONS AND MAINTENANCE DATA.

1.3 DELIVERY, STORAGE, AND HANDLING

Wrap toilet accessories for shipment and storage, then deliver to the jobsite in manufacturer's original packaging, and store in a clean, dry area protected from construction damage and vandalism.

1.4 WARRANTY

Provide manufacturer's warranty to repair or replace defective materials and workmanship for a period of one year from date of final acceptance of the work..

PART 2 PRODUCTS

2.1 ACCESSORY ITEMS

Provide toilet accessories where indicated in accordance with Contractor-provided product schedule. Conform to the requirements for accessory items specified herein which are based on MIL-STD-1691 Joint Schedule Numbers (JSN). Provide each accessory item complete with the necessary mounting plates of sturdy construction with corrosion resistant surface.

Provide stainless steel products listed herein manufactured from materials containing a minimum of 50 percent recycled content. Provide data identifying percentage of recycled content for stainless steel toilet accessories.

2.1.1 Anchors and Fasteners

Provide corrosion-resistant anchors and fasteners capable of developing a restraining force commensurate with the strength of the accessory to be mounted and suited for use with the supporting construction. Provide tamperproof design exposed fasteners with finish to match the accessory. Provide fasteners proposed for use for each type of wall construction and mounting.

2.1.2 Finishes

Except where noted otherwise, provide the following finishes on metal:

Metal	Finish
Stainless steel	No. 4 satin finish
Carbon steel, copper alloy, and brass	Chromium plated, bright

2.1.3 Item A5145 Hook, Garment, Double, SS, Surface Mounted

Surface mounted double garment hook made of stainless steel with satin finish. For use on door back or wall. Hook comes with concealed mounting bracket secured to concealed wall plate. Mounting hardware included. Flange size is approximately 2 inches by 2 inches.

PART 3 EXECUTION

3.1 INSTALLATION

Do not install items that show visual evidence of biological growth. Provide the same finish for the surfaces of fastening devices exposed after installation as the attached accessory. Provide oval exposed screw heads. Install accessories at the location and height indicated. Protect exposed surfaces of accessories with strippable plastic or by other means until the installation is accepted. After acceptance of accessories, remove and dispose of strippable plastic protection. Coordinate accessory manufacturer's mounting details with other trades as their work progresses. After installation, thoroughly clean exposed surfaces and restore damaged work to its original condition or replace with new work.

3.1.1 Recessed Accessories

Fasten accessories with wood screws to studs, blocking or rough frame in wood construction. Set anchors in mortar in masonry construction. Fasten to metal studs or framing with sheet metal screws in metal construction.

3.1.2 Surface Mounted Accessories

Mount on concealed backplates, unless specified otherwise. Conceal fasteners on accessories without backplates. Install accessories with corrosion-resistant fasteners as required by the construction. Install backplates in the same manner, or provide with lugs or anchors set in mortar, as required by the construction. Fasten accessories mounted on gypsum board and plaster walls without solid backing into the metal or wood studs, or to backplates secured to metal studs.

3.2 CLEANING

Clean material in accordance with manufacturer's recommendations. Do not use alkaline or abrasive agents. Take precautions to avoid scratching or marring exposed surfaces.

-- End of Section --

P2# 519087 - DSSC DLA Repair Building 27
Columbus, OH

SECTION 10 51 13

LOCKERS
08/24

PART 1 GENERAL

1.1 REFERENCES

The publications listed below form a part of this specification to the extent referenced. The publications are referred to within the text by the basic designation only.

ASTM INTERNATIONAL (ASTM)

ASTM D4976	(2012; R 2020) Standard Specification for Polyethylene Plastics Molding and Extrusion Materials

U.S. GENERAL SERVICES ADMINISTRATION (GSA)

FS AA-L-00486	(Rev J) Lockers, Clothing, Steel

U.S. NATIONAL ARCHIVES AND RECORDS ADMINISTRATION (NARA)

36 CFR 1191	Americans with Disabilities Act (ADA) Accessibility Guidelines for Buildings and Facilities; Architectural Barriers Act (ABA) Accessibility Guidelines

1.2 SUBMITTALS

Government approval is required for submittals with a "G" or "S" classification. Submittals not having a "G" or "S" classification are for information only. When used, a code following the "G" classification identifies the office that will review the submittal for the Government. Submit the following in accordance with Section 01 33 00 SUBMITTAL PROCEDURES:

SD-02 Shop Drawings

Types;

Location;

Installation

Numbering System

SD-03 Product Data

Material

Locking Devices

Handles

Finish

Locker Components

Assembly Instructions

SD-04 Samples

Color Chips;

1.3 DELIVERY, HANDLING, AND STORAGE

Deliver lockers and associated materials in their original packages, containers, or bundles bearing the manufacturer's name and the name of the material. Protect from weather, soil, and damage during delivery, storage, and construction.

1.4 FIELD MEASUREMENTS

To ensure proper fits, make field measurements prior to the preparation of drawings and fabrication. Verify correct location.

1.5 QUALITY ASSURANCE

1.5.1 Color Chips

Provide a minimum of three color chips, not less than 3 inches square, of each coloras requested by Contracting Officer..

Government may request performance-characteristic tests on assembled lockers. Tests and results must conform to FS AA-L-00486. Tests and results for HDPE lockers must conform to applicable requirements of ASTM D4976 and applicable requirements of FS AA-L-00486. Lockers not conforming will be rejected.

PART 2 PRODUCTS

2.1 ACCESSIBILITY

Comply with 36 CFR 1191 with regard to accessibility of lockers and locker benches, locker features, latching and locking, and signage.

2.2 TYPES

Locker must have the following type and size in the location and quantities indicated. Locker finish colors will be selected from manufacturer's standard colors by Contracting Officer though the submittal process..

Lockers must be manufactured asprefabricated solid high-density polyethylene (HDPE) units.

2.2.1 Single-tier Lockers

Single-tier lockers must be as follows:

Type EQ-01: Single-tier locker 15 inches wide, 24 inches deep, and 72 inches high, attached to concrete base and bench as per drawings

2.2.2 Double-tier Z-style Lockers

Double-tier Z-style lockers must be as follows:

Type EQ-02: Double-tier Z-style locker 15 inches wide, 24 inches deep, and 60 inches high, attached to concrete base and bench as per drawings.

2.2.3 Three-tier Lockers

Three-tier lockers must be as follows:

Type EQ-03: Three-tier locker 15 inches wide, 24 inches deep, and 72 inches high, attached to concrete base and bench as per drawings

2.2.4 Four-tier Lockers

Four-tier lockers must be as follows:

Type EQ-04: Four-tier locker 15 inches wide, 24 inches deep, and 72 inches high, attached to concrete base and bench as per drawings

2.3 MATERIAL

2.3.1 Solid High-Density Polyethylene (HDPE)

ASTM D4976 solid 1/2 inch HDPE panels, extrusions, and casting forming locker bodies, doors, and shelves. Include bases, sloped tops, end panels, and infill panels.

2.3.2 Finish

2.3.2.1 Color

As selected from manufacturer's Standard Colors by Contracting Officer through the Submittal Process..

2.4 COMPONENTS

2.4.1 Built-In Locks

Built-in locks are not required.

2.4.2 Coat Hooks

FS AA-L-00486, stainless steel.

2.4.3 Hanger Rods

FS AA-L-00486, chromium plated steel.

2.4.4 Door Handles

FS AA-L-00486. Provide stainless steel handles.

2.4.5 Doors

FS AA-L-00486, not less than 0.0598 inch thick steel sheet. Provide partial louvered face providing a minimum 010 percent open area.

2.4.5.1 Hinges

In addition to the requirements of FS AA-L-00486, provide 5-knuckle hinges, minimum 2 inches high. Fabricate knuckle hinges from not less than 0.0787 inch thick steel chromium plated steel. Weld or bolt hinges to the door frame to suit materials. Weld, bolt, or rivet hinges to the door to suit materials.

2.4.5.2 Latching Mechanisms

FS AA-L-00486.

2.4.6 Latch Strikes

FS AA-L-00486. Fabricate from not less than 0.0787 inch thick chromium plated steel sheet, except latch strike must be continuous from top to bottom and fabricated as part of the door framing. Provide no less than two silencers per door strike.

2.4.7 Solid HDPE Latches

Provide recessed door latch assembly of solid HDPE with latching devices compatible with the locker body construction. Include necessary metal components to provide latching and locking function with latches engaging the locker body at two locations for double tier doors and three locations for single tier full height doors.

2.4.8 Silencers

FS AA-L-00486.

2.4.9 Back and Side Panels, Tops, and Bottoms

FS AA-L-00486, not less than 1/2 inch solid HDPE panel. Provide concealed anchored filler pieces where indicated that match side panel material.

2.4.10 Sloping Locker Tops

Provide sloping locker tops in addition to the locker-section flat tops. Sloping tops must be continuous in length. Provide fillers or closures at the exposed end of sloping tops. Fabricate sloping tops from not less than 3/8 inch solid HDPE panels.

2.4.11 Shelves

FS AA-L-00486. Fabricate from not less than 1/2 inch solid HDPE panels.

2.4.12 Number Plates

FS AA-L-00486. Aluminum. Provide consecutive numbers from 000 to 999.

2.4.13 Locker Benches

Provide fixed locker benches as manufactured by the locker manufacturer. Match materials and finishes of bench tops to lockers. Provide stainless steel anchor types suited to the floor substrate designed to transfer full support and stability loads to the substrates.

2.4.14 Locker Bench Tops

Support bench tops with welded metal tube pedestals or welded metal wall brackets with a minimum of two support points for each bench length. Maximum length 72 inches. Height from finished floor to top of bench 17-1/2 inches. Fabricate pedestal and wall brackets from stainless steel. Provide stainless steel fasteners and anchors. Space support points for each bench as required to support 100 plf with maximum deflection not to exceed L/180 between supports.

Provide bench tops fabricated from 1-1/4 inch thick solid HDPE with textured finish. With top width of 9-1/2 inches. Provide bench dimensions required for accessibility compliance.

2.4.15 Fastening Devices

Provide bolts, nuts, and rivets as specified in FS AA-L-00486.

PART 3 EXECUTION

3.1 ASSEMBLY AND INSTALLATION

Assemble lockers according to the locker manufacturer's instructions. Align lockers horizontally and vertically. Secure lockers to wall with screws as indicated. Bolt adjacent lockers together. Adjust doors to operate freely without sticking or binding and to ensure they close tightly.

3.2 FIELD QUALITY CONTROL

3.2.1 Testing

Government may request performance-characteristic tests on assembled lockers in accordance with FS AA-L-00486. Lockers not conforming will be rejected.

3.2.2 Repairing

Remove and replace damaged and unacceptable portions of completed work with new.

3.2.3 Cleaning

Clean surfaces of the work, and adjacent surfaces soiled as a result of the work, in an approved manner. Remove equipment, surplus materials, and rubbish from the site.

-- End of Section --

P2# 519087 - DSSC DLA Repair Building 27
Columbus, OH

SECTION 12 00 01.00 20

FURNITURE, FIXTURES AND EQUIPMENT (FF&E) PACKAGE
02/23

PART 1 GENERAL

1.1 CONTRACTOR'S FURNITURE, FIXTURES AND EQUIPMENT (FF&E) HANDLING AND ADMINISTRATION RATE (HAR)

The HAR accounts for all administrative costs, overhead, FF&E subcontractor bonding fees deemed necessary by the Contractor, administration of subcontracts, profit, and any other costs associated with, and related to, the coordination and processing of the procurement and installation of FF&E. Offerors must propose a HAR for the FF&E not to exceed 5 percent. Do not include costs associated with INTERIOR DESIGN SERVICES in the HAR. The proposed HAR percentage is a fixed rate and will be incorporated into the contract award. The HAR will not be adjusted regardless of fluctuations from the estimate amount for the FF&E.

The Government will indicate the FF&E estimate in the FF&E Option Item in the Price Schedule based on the FF&E Design. The Government estimated price is to provide Offerors with the projected magnitude of effort and includes the actual estimated cost of the FF&E including freight, installation, and other applicable vendor charges. The Government estimated price is only an estimated amount and must not be altered by the Contractor during the solicitation process.

1.2 REFERENCES

The publications listed below form a part of this specification to the extent referenced. The publications are referred to within the text by the basic designation only.

U.S. DEPARTMENT OF DEFENSE (DOD)

FC 1-300-09N	(2024) Navy and Marine Corps Design
UFC 3-120-10	(2018; with Change 2, 2021) Interior Design

1.3 DEFINITIONS - FF&E TURNKEY EFFORT

The Furnishings, Fixtures, and Equipment Package may include, but is not limited to; systems and modular furniture, workstations, desks, seating, storage, filing, visual display items, accessories, artwork, command graphics, training and conference furniture, soft window treatments (draperies, valances, and cornices), shop equipment, fitness equipment, Child Development Center furniture, appliances, portable weapons cabinets, dorm and quarters furnishings and other miscellaneous items to support facility functions.

The project may also include Specialty CEQ Package for which the Activity may assist in specifying items, which may include, but not limited to: Audio Visual (AV) equipment, commercial kitchen equipment, medical equipment and wharf equipment. For the purposes of this specification, if a Specialty CEQ Package is required, the same requirements identified for the FF&E Package apply to the Specialty CEQ Package or as outlined by project-specific UFC or requiring Agency.

1.3.1 FF&E Option Item

As an option, provide procurement and installation coordination of the approved complete and usable Final FF&E Package.

b. The Government is not obligated to award the FF&E Option Item. Should the Government choose to award the FF&E Option, the Item(s) will be awarded as a negotiated option to the contract or task order. The Contractor's proposed HAR will be applied to all vendor and supplier costs for the FF&E.

c. The Government will provide separate funding for procurement and installation coordination of the FF&E Package. Construction funds will not be used. Upon receipt of required funding, the Contracting Officer will authorize the Contractor, as an option to the construction contract, to provide the Government-approved Final FF&E Package exactly as specified and complying with priorities found in the Federal Acquisition Regulation (FAR) 8.404 Use of Federal Supply Schedules. The amount of the option will be the actual cost of these items from the Federal Government price schedules and, when necessary, Open Market sources. The option amount will also include shipping, freight, handling, installation, vendor design fees, project management fees, applicable sales tax, Contractor's FF&E Handling and Administration Rate percentage as applied to the Final FF&E or Specialty CEQ total cost(s) and the NAVFAC required bond fee.

d. If awarded, the FF&E Option Item will be awarded at least 6 months prior to the contract completion date. A minimum of 6 months is required for the Contractor to purchase, deliver and install the product without impacting the overall completion date of the project. The Contractor's schedule must assume the award of the FF&E as an option. Government Fiscal Year funding availability must be considered and incorporated into the FF&E Schedule. No schedule extensions will be granted if the option item is awarded at least 6 months prior to the contract completion date. If the Government decides to negotiate and award the option item with less than 6 months prior to the contract completion date, the Contractor may be entitled to a contract extension and extended field overhead. A contract extension and extended field overhead will only be granted in those cases where the Contractor demonstrates that the Government's award of the FF&E Option Item is within the last 6 months of the contract.

e. The FF&E Option Item (and any Specialty Equipment and Audio Visual (A/V) Option Item(s)) are exempt from NAVFAC Procedures, Guidance and Instruction (NPGI) 17.202(a)(ii) option restriction to award within 365 days of contract award. Per NPGI 17.202(a)(ii), Note 2, "Options for Collateral Equipment (CEQ) to include Furniture, Fixtures and Equipment (FF&E) and Audio-Visual (A/V) are not limited to the 365 day time period from date of award. Written approval for a longer period to exercise options for FF&E and A/V is not required."

1.3.2 Authorization for Use of Government Supply Sources

The Contracting Officer will authorize the Contractor to purchase the required products through the specified sources and will provide a letter of authorization to the Contractor in accordance with FAR 51.102 Authorization to use Government supply sources (e)(1) through (5) citing the name of the furniture dealer(s) and other information to use when

accessing the Federal Government supply sources. The Contractor must procure and coordinate the installation of the approved Final FF&E Package exactly as specified.

1.3.3 Buy American Act (BAA) and Trade Agreement Act (TAA)

All products under the FF&E Option Item are subject to the rules and regulations governing the acquisition of foreign supplies, e.g., Buy American Act (BAA) (FAR 25.1 Buy American-Supplies). This also includes all supplies procured through Government Supply Sources. Solicitations are required to meet the Trade Agreement Act (TAA) Designated Countries (FAR 25.4 Trade Agreements), as part of the BAA. In addition to the applicable BAA clauses and provisions for construction materials, the Contracting Officer must also insert the appropriate BAA or TAA clauses and provisions for supplies. The Contractor is responsible for ensuring the FF&E is compliant with the BAA or TAA.

1.3.4 Prohibition on Procurement of Certain Items Containing Perfluorooctane Sulfonate (PFOS) or Perfluorooctanoic Acid (PFOA)

Effective April 1, 2023, in accordance with section 333 of the William M. (Mac) Thornberry National Defense Authorization Act for Fiscal Year 2021, the Department of Defense must not procure any covered items that contain PFOS or PFOA. The Contractor must not provide any covered items containing PFOS or PFOA in performance of this contract, task order, delivery order, or blanket purchase agreement order. A covered item means the following:

a. Nonstick cookware or cooking utensils for use in galleys or dining facilities.

b. Upholstered furniture, carpets, and rugs that have been treated with stain-resistant coatings.

1.3.5 Procurement and Installation

The Contractor must coordinate the building completion date with the installation dealer(s) specified in the FF&E Package. It is recommended that the Contractor order the products once the option is awarded to avoid incurring additional costs. Production and delivery dates should be requested of manufacturers or dealers at the time of order placement to coincide with the Beneficial Occupancy Date (BOD). The Contractor must anticipate possible manufacturer price increases if order placement is delayed. Any costs incurred due to manufacturer price increases as a result of order placement delays will be the burden of the Contractor.

1.3.6 Deposits

The Contractor must anticipate providing a deposit of between 30 percent and 50 percent of the product costs when placing the orders with the manufacturer's dealerships. The Government will not fund deposits.

1.3.7 Construction Wage Rate Requirements Statute

Prior to the Interior Designer sending out the Best Value Determination (BVD) Request for Quote (RFQ) Package to vendors, the NAVFAC Contracting Officer, Contract Specialist, Project Manager, Design Manager, NAVFAC Interior Designer and Collateral Equipment Manager a determination as to whether the FF&E installation is covered by the Construction Wage Rate

Requirements statute. The BVD RFQ Package any items with installation that is subject to the Construction Wage Rate Requirements statute.

1.3.7.1 Construction Wage Rate Requirements Statute is Not Applicable

The Construction Wage Rate Requirements Statute is Not Applicable if the FF&E assembly and installation work is:

a. Segregable from the construction of the facility (i.e., procured in a separate FF&E Option (Item)); and

b. The assembly and installation work is performed by the FF&E vendor or dealer or subcontractor(s); and

c. The onsite FF&E work does not include a substantial amount of construction work; and

d. The workforce for the FF&E installation and delivery is separate and distinct from the labor workforce performing the construction effort by the Contractor.

If the above a. through d. are true, the Construction Wage Rate Requirements Statute is not applicable to FF&E installed by General Services Administration (GSA), other Government Supply Sources or Open Market.

1.3.7.2 Construction Wage Rate Requirements Statute is Applicable

The Construction Wage Rate Requirements Statute is Applicable if the FF&E assembly and installation work is:

a. Performed by the Contractor; and

b. Is not physically or functionally separate from the other construction work required by the contract; and

c. Is not capable of being performed on a segregated basis from the other construction work required by the contract.

-OR-

d. The assembly and installation work is performed by the FF&E vendor or dealer or subcontractor(s); and

e. The onsite FF&E work does include a substantial amount of construction work.

If the above a. through c. are true or d. through e. are true, the Construction Wage Rate Requirements statute would be applicable to the installation of all FF&E that is installed and attached to the facility.

1.3.8 Taxes

1.3.8.1 Exemptions

Exemptions for certain state or local taxes may be available to the Contractor and its subcontractors. The Contractor must take maximum advantage of all exemptions, including obtaining a resale permit from state and local taxation authorities whether available directly to the

Contractor or based on an exemption afforded the Government. The responsibility for paying applicable taxes rests with the Contractor. Applicable state and local taxes to the FF&E Package must be included with the subcontractor's quote, if required by the state or locality.

1.3.8.2 Construction Contract Requirements

As prescribed in FAR 29.401-3 Federal, State, and local taxes, the Contracting Officer must insert FAR clause 52.229-3, Federal, State and Local Taxes, in the construction contract. In accordance with this clause:

a. The contract price includes all applicable Federal, State, and local taxes and duties; and

b. The Government must, without liability, furnish evidence appropriate to establish exemption from any Federal, State, or local tax when the Contractor requests such evidence and a reasonable basis exists to sustain the exemption.

1.3.9 Performance and Payment Bonds

1.3.9.1 No Bond Requirement for FF&E at Time of Construction Contract Award

FAR 28.102-1(a) requires that performance and payment bonds be included in all construction contracts exceeding the Simplified Acquisition Threshold (SAT), except under the conditions listed. Since the FF&E Option Item is not part of the original contract award, the Contractor is not required to secure bond for the FF&E at the time the basic construction contract is awarded.

1.3.9.2 Additional Bond at FF&E Option Item Award

FAR 28.102-2(d) requires the Government to secure additional bond from the Contractor for any contract price increases. An increase to the original contract bond is required at the time of the FF&E Option Item award to protect the Government against the Contractor not providing FF&E ordered and to ensure that the FF&E vendor(s) receive payment if the Contractor goes out of business. The increased cost of the Government required bond must come from the FF&E funding source and is not a part of the Contractor's HAR.

1.3.9.3 Bonds Required by the Contractor

If the Contractor requires bonding from the FF&E subcontractor(s), the cost must be covered in the Contractor's HAR.

1.3.10 Item Unique Identification (IUID) and Valuation

Item Unique Identification (IUID) and valuation is a system of marking and valuing items delivered to Department of Defense (DoD) that enhances logistics, contracting, and financial business transactions. Utilize the IUID policy for all DoD contracts that require the delivery of items. An item is a single article or a single unit formed by a grouping of subassemblies, components or constituent parts. In accordance with DFARS 211.274-2 Policy for item unique identification, IUID is required for all delivered items for which the Government's unit acquisition cost is $5,000 or more. Items identified by the requiring activity to be serially managed, mission essential, controlled inventory or for other reasons requiring permanent identification, must be marked with a unique item

identifier.

1.3.10.1 IUID

The two main steps involved in IUID requirements are:

a. Item marking, and

b. Delivery of data about items as a part of the acceptance and delivery process.

1.3.10.2 Data Matrix Requirements

Item marking requires that qualifying items contain a data matrix either directly inscribed on the individual item or on a permanent label or data plate attached to the item. Delivery of data is executed by submitting to the IUID Registry information such as: description of the item, its value, and the date of acceptance by the government. The IUID Registry is the repository established to capture and store all IUID data.

1.3.10.3 Government's Unit Acquisition Cost

In accordance with DFARS 211.274-3 Policy for valuation, Contractors must be required to identify the Government's unit acquisition cost for all items delivered even if none of the criteria for placing a unique item identification mark applies.

1.4 ADMINISTRATIVE REQUIREMENTS

1.4.1 FF&E Pre-Installation Walk-Through

The Contractor must coordinate and participate in a walk-through to ensure that the building interior is substantially complete in all areas scheduled to receive FF&E to include floor, wall and ceiling finishes and building systems located on or in the ceilings. Attendees must include the FF&E vendor(s) in-person (if geographically feasible) or virtually and the NAVFAC Construction Manager. Approval by the NAVFAC Construction Manager to proceed with the FF&E installation is required. The walk-through date must occur prior to the commencement of the FF&E installation and accommodate sufficient time in the construction schedule for transportation of FF&E to the job site upon approval by the NAVFAC Construction Manager.

1.4.2 Sequencing

The Contractor must coordinate the building completion, occupancy, and furniture installation dates with the installation dealer(s) specified in the FF&E Package. Any costs associated with or delaying furniture shipments to accommodate the construction schedule is the responsibility of the Contractor.

1.5 SUBMITTALS

Government approval is required for submittals with a "G" or "S" classification. Submittals not having a "G" or "S" classification are for information only. When used, a code following the "G" classification identifies the office that will review the submittal for the Government. Submit the following in accordance with Section 01 33 00 SUBMITTAL PROCEDURES:

The NAVFAC Interior Designer is required to receive a copy of all submittals with a "G" Classification.

SD-01 Preconstruction Submittals

FF&E Schedule and Schedule Updates;

SD-04 Samples

Post Option Award FF&E Finish Submittals;

SD-05 Design Data

SD-10 Operation and Maintenance Data

Warranty and Maintenance Information;

SD-11 Closeout Submittals

Punch List(s) Submittal;

1.6 QUALITY CONTROL

1.6.1 Installation Qualifications

All FF&E must be installed by the manufacturer's dealer of record and not by the Contractor.

1.7 DELIVERY, STORAGE, AND HANDLING

FF&E must be shipped to and stored at the vendor or dealer's conditioned warehouse, until all items are received unless dealer has coordinated just-in-time delivery with the Contractor. Vendor or dealer is responsible for any orders arriving before or after the agreed upon delivery and installation date with the Contractor, including storage of items.

PART 2 PRODUCTS

Not used.

PART 3 EXECUTION

3.1 INTERIOR DESIGN SERVICES

Provide Interior Design FF&E services and deliverables in accordance with FC 1-300-09N, UFC 3-120-10, Interior Design Procedures: Furniture Fixtures and Equipment (FF&E) located at https://www.wbdg.org/ffc/navy-navfac/collateral-equipment/navfac-id-procedures-ffe and as further defined in the paragraphs below. Utilize NAVFAC templates, criteria and procedures documents located at https://www.wbdg.org/ffc/navy-navfac/collateral-equipment.

3.1.1 SYSTEM DESCRIPTION: CONTRACTOR'S INTERIOR DESIGN SERVICES

The FF&E Package submittal, as prepared by the Interior Designer, was developed to fully integrate with the building systems (e.g., electrical, mechanical) to include product sizes and communications, data, and

electrical requirements.

Provide and comply with Interior Design Procedures: Furniture Fixtures and Equipment (FF&E) CHAPTER(s) 1 through 4 and specific Design, Meeting and Submittal deliverables identified below in CHAPTER ID SERVICES - DESIGN BID BUILD (DBB) - PROCESS .

3.1.1.1 FF&E Package

The FF&E or CEQ Package all required FF&E items and Computer Aided Design and Drafting (CADD)/BIM drawings, will be provided by the NAVFAC Contracting Officer upon request. The Contractor must request to receive the package prior to the PRECON.

3.1.1.2 FF&E Schedule and Schedule Updates Submittal

For all projects, including fast track projects and renovations, the Contractor is responsible for sufficiently scheduling all FF&E meetings and deliverables early enough to:

a. Obtain the required government approvals,

b. Meet all FF&E funding, award, ordering and installation lead times and deadlines, and

c. Complete the FF&E installation by the Beneficial Occupancy Date (BOD).

All submittal due dates for the FF&E and any Specialty CEQ must be noted in the FF&E Schedule and Schedule Updates Submittal and reflected in the Contractor's construction schedule. Provide a FF&E Schedule and Schedule Updates Submittal for all FF&E and Specialty CEQ services and deliverables to the NAVFAC Construction Manager, Interior Designer and Contracting Officer 7 business days after the . Submit FF&E Schedule and Schedule Updates Submittal to the NAVFAC Interior Designer within 7 days of any construction schedule revisions.

All submittal due dates for the FF&E must be reflected in the Contractor's construction schedule. Submit proposed changes to the NAVFAC Interior Designer for review. The Contracting Officer must approve all revisions or deviations.

3.1.1.3 Services

3.1.1.3.1 Building Infrastructure and Systems

The FF&E and CEQ Package(s) must be fully integrated with the construction and schedule of all building finishes and all building infrastructure and systems (such as heating, ventilation and air conditioning (HVAC), plumbing, fire protection, communications, electrical, data, architecture). All electrical, data and communications outlets, switches, fire extinguishers, thermostats, sprinkler heads and Architectural Barriers Act (ABA) clearances must be accommodated for and be fully accessible once equipment is installed. The Interior Designer and Equipment Specialist(s) must work with the Contractor and the electrical, telecommunication, and mechanical subcontractors to coordinate all infrastructure with the recommended vendors to include connection of power, data, communications, waterlines and gas lines, and calibration, testing and training prior to facility turnover and operation.

Provide coordination with the building infrastructure and provide revisions to the building infrastructure if required to support the FF&E Package and Specialty CEQ Package.

3.1.1.3.2 Government-Furnished, Government Installed Equipment (GFGI) and Government-Furnished, Contractor-Installed Equipment (GFCI)

The FF&E and CEQ plans included inall FF&E or CEQ to include specialty CEQ, existing and future Government-Furnished, Government Installed (GFGI) Equipment and Government-Furnished, Contractor-Installed Equipment (GFCI). These items may include, but are not limited to, multi-function devices, printers, shredders, safes and vending machines.

3.1.2 FF&E MEETINGS, PRESENTATIONS AND SUBMITTALS

The Contractor must attend site visits, walk-throughs, coordinate required mock-ups, obtain Activity and NAVFAC approvals and provide a complete and functional FF&E Package. All meetings must be coordinated with advance notice to the FF&E vendor(s),NAVFAC Interior Designer, so that schedule and travel can be coordinated.

These are minimum requirements and the Contractor must be prepared to provide all additional meetings and submittals that may be necessary to support the Interior Design effort and FF&E coordination. Submit any revisions or deviations caused by discontinued items or NAVFAC required changes to the NAVFAC Interior Designer for review. The Contracting Officer must approve all revisions and deviations.

3.1.2.1 Interior Finish Construction Submittals

Some building interior finishes (Structural Interior Design) may need to be revised to coordinate with the Final FF&E Package. Submit any revisions or deviations to the building interior finishes to the NAVFAC Interior Designer for review. The Contracting Officer must approve any changes to the building interior finishes.

3.2 POST-AWARD FF&E OPTION ITEM CHANGES

3.2.1 Requests for Price Changes

The FF&E Option has been priced, negotiated, and awarded based on specific line items as detailed in the approved Final FF&E Submittal. These items have been approved considering color, specific type and quality of material, price, and usable life. The Government will expect and require the Contractor to provide exactly those items. Any requests to change FF&E items that will cause a price change must be submitted in writing for approval by the NAVFAC Contracting Officer and Interior Designer before purchase and installation.

3.2.2 Progress Payments

Per FAR 52.232-5 Payments under Fixed-Price Construction Contracts, the Contracting Officer may authorize a progress payment on the FF&E ordered as material delivered to the Contractor, at locations other than the site if:

a. Consideration is specifically authorized by this contract; and

b. The Contractor furnishes satisfactory evidence, including a copy of

the order acknowledgment and proof of payment, that it has acquired title to such material, the material is stored in a secure, climate controlled location, and that the material will be used to perform this contract.

3.3 INSTALLATION

The FF&E Package includes the installation of all furniture and furnishings as specified in the Final FF&E Package. The FF&E installation dealer(s) specified in the FF&E Package must receive, store as required, transport to the project site, off load, inside deliver, unpack, assemble, install, clean, and dispose of all the trash for all FF&E. It is the Contractor's responsibility to coordinate the building completion, occupancy, and furniture installation dates with the installation dealer(s) specified in the FF&E Package. Any costs associated with or delaying furniture shipments to accommodate the construction schedule is the responsibility of the Contractor.

3.3.1 FF&E Pre-Installation Walk-Through

The Contractor must coordinate and participate in a walk-through to ensure that the building interior is substantially complete in all areas scheduled to receive FF&E to include floor, wall and ceiling finishes and building systems located on or in the ceilings. Attendees must include the NAVFAC Construction Manager and the FF&E vendor(s) in-person (if geographically feasible) or virtually. Approval by the NAVFAC Construction Manager to proceed with the FF&E installation is required. The walk-through date must occur prior to the commencement of the FF&E installation and accommodate sufficient time in the construction schedule for transportation of FF&E to the job site upon approval by the NAVFAC Construction Manager.

3.3.2 Walk Through(s) and Punch List(s) Submittal

The Contractor, NAVFAC Interior Designer, FF&E vendor(s) or dealer(s) representative and installation superintendent, other specialty consultants (if applicable), NAVFAC Construction Manager and the Activity will attend one punch list site visits. The site visit must be held at the installation dealer's 98 percent completion and must identify and record all punch list items in the Punch List(s) Submittal.

The Contractor must repair, to the Government's satisfaction, all damage to any facility finish that is a result of the furniture installation and correct all punch list items for the FF&E. Any damage or loss of FF&E after installation will be the responsibility of the Contractor and not the FF&E vendor or installer. Daily installation walk-throughs by the Contractor and the FF&E installation dealer are encouraged to document any damage and identify the responsible party(s).

3.4 INSTALLATION WARRANTY

Install all movable furnishings in accordance with the manufacturer's instructions and warranty requirements. All movable furnishings must be level and aligned. All doors, drawers and accessories must be level and aligned to open, close and otherwise operate smoothly and securely.

All FF&E and Specialty CEQ must be installed by the manufacturer's dealer of record and not by the Contractor.

3.5 CLOSEOUT SUBMITTALS

3.5.1 Warranty And Maintenance Information

Provide to the Contracting Officer at the final FF&E walk-thru one electronic copy and one binder copy of all ordering documentation, including but not limited to, quotes, purchase orders, factory order numbers (FO), IUID, and warranty and maintenance information for all products.

-- End of Section --

P2# 519087 - DSSC DLA Repair Building 27
Columbus, OH

SECTION 12 50 00.13 10

FURNITURE AND FURNITURE INSTALLATION
08/17, CHG 1: 11/18

PART 1 GENERAL

Purchase and install furniture as identified within this specification. This specification section includes a Furniture, Fixtures and Equipment (FF&E) Package attachment.

The requirements of this specification also apply to systems furniture unless otherwise specified in Section 12 59 00 Systems Furniture.

1.1 REFERENCES

The publications listed below form a part of this specification to the extent referenced. The publications are referred to within the text by the basic designation only.

AMERICAN SOCIETY OF HEATING, REFRIGERATING AND AIR-CONDITIONING ENGINEERS (ASHRAE)

ASHRAE 90.1 - IP	(2019) Energy Standard for Buildings Except Low-Rise Residential Buildings

ASTM INTERNATIONAL (ASTM)

ASTM E84	(2023) Standard Test Method for Surface Burning Characteristics of Building Materials

NATIONAL FIRE PROTECTION ASSOCIATION (NFPA)

NFPA 101	(2024) Life Safety Code
NFPA 265	(2023; ERTA 1 2023) Standard Methods of Fire Tests for Evaluating Room Fire Growth Contribution of Textile or Expanded Vinyl Wall Coverings on Full Height Panels and Walls

U.S. NATIONAL ARCHIVES AND RECORDS ADMINISTRATION (NARA)

36 CFR 1191	Americans with Disabilities Act (ADA) Accessibility Guidelines for Buildings and Facilities; Architectural Barriers Act (ABA) Accessibility Guidelines

UL SOLUTIONS (UL)

UL 723	(2020) UL Standard for Safety Test for Surface Burning Characteristics of Building Materials

1.2 SUBMITTALS

Government approval is required for submittals with a "G" or "S"

classification. Submittals not having a "G" or "S" classification are for information only. When used, a code following the "G" classification identifies the office that will review the submittal for the Government. Submit the following in accordance with Section 01 33 00 SUBMITTAL PROCEDURES:

SD-01 Preconstruction Submittals

Storage Location;

SD-02 Shop Drawings

Installation Drawings;

SD-03 Product Data

Product Data;

Product Style Options;

SD-04 Samples

Fabric and Finishes;

SD-07 Certificates

Authorized Dealer;

Certified Furniture Installers;

Licensed Electrician;

Certified Telecommunications Installer;

Manufacturer's Certification;

Warranty;

SD-10 Operation and Maintenance Data

Furniture, Data Package 1;

SD-11 Closeout Submittals

Energy Efficient Equipment; S

Reduced VOC's for Furniture; S

Recycled Content of Furniture; S

Bio-Based Content of Furniture; S

1.3 SERVICES

Provide services to include furniture purchase, field measuring, installation drawings, shipping and delivery coordination, receiving, inspection, submitting and processing freight and warranty claims, unpacking, storing, assembly, installation and other related activities or tasks for a complete and functional installation. Reference Section

01 45 00 QUALITY CONTROL for inspection requirements. The Contracting Officer must be allowed to participate in inspections. In addition provide services for existing furniture as specified, reference paragraph on EXISTING FURNITURE for more information. Develop project timelines and establish shipping, receiving and installation dates that coordinate with the building construction schedule. Hold at a minimum weekly team meetings to brief the project team, include the Contracting Officer. Notify the Contracting Officer immediately of any scheduling problems, discontinued furniture items including fabrics and finishes, or other conditions which may cause delays, and recommend available substitutes, solutions, and provide updated timeline to coordinate with building construction schedule. Substitutes and solutions must comply with the specification and be approved by the Contracting Officer.

1.4 FURNITURE PURCHASE

Purchase furniture, including checking accuracy of all acknowledgements and schedules from manufacturers and making necessary corrections to insure that the manufacturer has a correct understanding of the order and requirement. Compete the furniture purchase by obtaining a minimum of (3) separate proposals. Furniture is subject to FAR clause 52.236-5 Materials and Workmanship.

1.5 ALTERNATE DESIGN

When a manufacturer's product is unable to provide desk and workstation configurations and filing/storage that conform exactly to the furniture layouts shown in the contract drawings and specifications, alternate designs may be submitted for consideration by the Contracting Officer. Alternate designs must meet or exceed the following criteria. Alternate designs that are submitted but do not meet these criteria will be rejected.

1.5.1 Desk and Workstation Size and Configuration

The alternate design must provide desks and workstations of the same basic size and configuration shown, with only the sizes of the individual components within the desk and workstation changed to meet the standard product of the manufacturer.

1.5.2 Filing and Storage Size and Configuration

The alternate design must provide filing and storage of the same basic size and configuration shown, with only the size changed to meet the standard product of the manufacturer. The storage capacity must not be reduced.

1.5.3 Furniture Requirements

The furniture provided must comply with the drawings, specifications, and the requirements identified in the FF&E Package Attachment.

1.5.4 Layout

The storage capacity, number of desks and workstations, number of persons accommodated, width of aisles, and functionality must be maintained. Layout must comply with NFPA 101 and 36 CFR 1191.

1.6 AUTHORIZED DEALER, CERTIFIED FURNITURE INSTALLERS, LICENSED ELECTRICIAN AND CERTIFIED TELECOMMUNICATIONS INSTALLER

When required by the furniture manufacturer, furniture must be installed by an authorized dealer and a certified furniture installation crew must be used on the project. All furniture requiring hardwiring must be completed by a licensed electrician. Communications installers must be Building Industry Consulting Services International (BICSI) Registered Cabling Installers, Technician Level or have a minimum of 3 years experience in the installation of the specified cables and components. All installers, furniture, electrical and communications, must be on-site if questions arise. Submit copies of authorized dealer, furniture installation crew, licensed electrician and certified telecommunications installer certifications.

1.7 DELIVERY, STORAGE AND HANDLING

1.7.1 Delivery

Deliver furniture to the jobsite in manufacturer's original packaging or blanket wrapping. Original packaging must be marked with the manufacturer name, item identification, and project reference clearly marked.

1.7.2 Furniture Inspection

Inspect furniture and provide notification of damage within the time frame required by the shipping company while carrier is still on-site. Complete claims for concealed damage within the time frame required by the shipping company and furniture manufacturer. A claim file must be maintained that documents each claim. Forward copies of claims to the Contracting Officer on a weekly basis.

1.7.3 Storage

Storage space is not available on-site and furniture must be stored at an off site location. Provide any storage space required for furniture and transport stored furniture to the project site for installation. Storage location must be approved by the Contracting Officer at the time of the furniture order. If storage is required, furniture must be stored in a dry location that is adequately ventilated and free from dirt and dust, water, and other contaminants, in a manner that permits easy access for inspection and handling, and in an environment in accordance with furniture manufacturers instructions.

1.7.4 Furniture Staging Area

Coordinate location of the furniture staging area with the Contracting Officer.

1.8 WARRANTY

Provide manufacturer performance guarantees or warranties for single-shift service and include parts, labor and transportation as follows, unless otherwise noted:

a. Systems Furniture -

b. Desks and Workstations - 12 year minimum

c. Filing and Storage - 12 year minimum

d. Seating

(1) Seating, unless otherwise noted - 10 year minimum

(2) 24/7 Seating (multiple shift use) - 10 year minimum

(3) Seating Mechanisms and Pneumatic Cylinders - 10 year minimum

(4) Lounge Seating - 10 year minimum

(5) Stacking Chairs - 10 year minimum

e. Tables

(1) Unless otherwise noted - 10 year minimum

(2) Table Mechanisms - 5 year minimum

(3) Table Ganging Device - 1 year minimum

f. Miscellaneous

(1) Fabric - 3 year minimum

(2) LED Task Lighting - 5 year minimum

(3) Task Lighting - 3 year minimum

Provide items not listed with a 1 year minimum. When manufacturers standard performance guarantees or warranties exceed the minimum requirements identified, provide the standard performance guarantee or warranty. Submit manufacturer's warranty information for all furniture items.

PART 2 PRODUCTS

2.1 PRODUCT SUSTAINABILITY CRITERIA

For products in this section, where applicable and to extent allowed by performance criteria, provide and document the following:

2.1.1 Energy Efficient Equipment

Coordinate requirement for energy efficient equipment, such as appliances and lighting, and provide documentation in accordance with Section 01 33 29 SUSTAINABILITY REQUIREMENTS AND REPORTING paragraph ENERGY EFFICIENT EQUIPMENT.

2.1.2 Reduced VOC's for Furniture

Coordinate requirement for reduced VOC requirements for furniture and provide documentation in accordance with Section 01 33 29 SUSTAINABILITY REQUIREMENTS AND REPORTING paragraph REDUCE VOLATILE ORGANIC COMPOUNDS.

2.1.3 Recycled Content of Furniture

Coordinate requirement for recycled content for furniture and provide

documentation in accordance with Section 01 33 29 SUSTAINABILITY REQUIREMENTS AND REPORTING paragraph RECYCLED CONTENT.

2.1.4 Bio-Based Content of Furniture

Coordinate requirement for biobased content for furniture and provide documentation in accordance with Section 01 33 29 SUSTAINABILITY REQUIREMENTS AND REPORTING paragraph BIO-BASED PRODUCTS.

2.2 REFERENCE TO MANUFACTURER NAMES AND COLORS

Where product and color is shown as being specific to one manufacturer in the FF&E Package Attachment, an equivalent color or product by another manufacturer may be submitted for approval. Manufacturers, style lines, model numbers, finish, and fabric information are provided to establish design intent and are not intended to limit the selection of equal products and colors from other manufacturers.

2.3 FURNITURE REQUIREMENTS

Use the FF&E Package Attachment in conjunction with the drawings and specifications for the furniture requirements. Provide furniture from manufacturer's standard product as shown in the most current published price list or amendment. Furniture provided must be part of current line as indicated with no intent to discontinue within two years. Provide furniture that is intended for commercial use not residential. submit product data for all furniture items, to include catalog cuts, brochures, product information, and other necessary literature to indicate compliance with specifications. Provide product data for all items together in a single submittal. When applicable, include GSA schedule information to confirm that items are available on GSA schedule. Tag product data sheets with applicable furniture item code and name. Submit data for all product style options for selection when options are available. This applies to but is not limited to furniture items that have options such as edge details, hardware options, and grommet colors. Submit manufacturer's certification stating that furniture meets the specifications.2.3.1 Construction

a. Provide furniture that complies with the following testing requirements:

(1) ANSI/BIFMA

(2) Flammability

(a) Systems furniture and workstation panel components must meet requirements for flame spread and smoke development as specified by NFPA 101 except as follows. Conduct testing in accordance with either ASTM E84 or UL 723 on the entire assembled panel of the worst case (most combustible) combination of fabric and interior construction. In addition, fabric must meet the requirements of NFPA 265. Do not exceed panel flame spread 25 for Class A 75 for Class B 200 for Class C, and do not exceed panel smoke development 450 for Class A, B, and C.

b. Provide furniture with no rough or sharp edges or exposed connections. Clips, screws, and other construction elements must be

concealed wherever possible.

c. Items such as desks, workstations and systems furniture must include all necessary components to be structurally sound and must not be attached to the wall unless specified to be wall mounted in the contract documents.

d. Desks, workstations, storage, and tables must have leveling devices to compensate for uneven floors.

e. The underside of desks, workstations, and tables must be completely and smoothly finished.

f. The backside of freestanding desks, workstations, lockers,locker benches and storage must be finished.

g. Provide chair casters and glides appropriate for the floor material they are located on, such as carpet and resilient flooring.

2.3.2 Locks and Keying

a. All drawers and doors, including but not limited to overhead storage cabinets, storage towers, supply cabinets, storage cabinets, desk and workstation pedestals, and filing cabinets must be lockable.

b. Key each desk and workstation in an office differently and key locks within each desk and workstation alike.

c. Furniture storage components in private offices must be keyed alike. Key each private office differently.

d. Provide field changeable lock cylinders in desks and workstations with a minimum of 100 different key options. Number keys and lock cylinders for ease of replacement or clearly label locks with a key number, except for those manufacturers who have removable format locks.

e. Drawers within a pedestal must be lockable either by a central lock that controls all pedestals under one work surface or an individual keyed lock in each pedestal.

f. Central file and storage units which are grouped together but are not a part of a workstation must be keyed differently unless otherwise specified.

g. Provide two keys for each workstation when components are keyed alike. Also provide two keys for each miscellaneous item such as filing cabinets, supply cabinets, storage cabinets, and similar type furniture items.

h. Provide three copies of each master key to the Contracting Officer.

i. Inventory keys, label keys by lock number, room number and furniture item and turn over inventory and keys to the Contracting Officer.

2.4 FURNITURE LAYOUT

Provide furniture layout as indicated.

PART 3 EXECUTION

3.1 BUILDING EXAMINATION

Become familiar with details of the work, inspect all areas and conditions under which furniture is to be installed, and coordinate scheduling of dedicated elevators and docks. Notify the Contracting Officer in writing of any conditions detrimental to the proper and timely completion of the installation. Work will proceed only when conditions have been corrected.

3.2 BUILDING PROTECTION

Protect building surfaces to prevent soiling and damage during delivery and installation. Any soiling and damage that occurs to the building during the installation of furniture must be cleaned and repaired, or replaced to its original condition and must be approved by the Contracting Officer.

3.3 INSTALLATION

3.3.1 Installation Drawings

Installation drawings must include furniture layout, critical dimensions and locations of electrical and communications. Reflect field verified conditions in furniture layouts. Drawings must be at 1/4 inch = 1 foot scale, unless otherwise specified. Provide typical plans and isometrics/elevations of desks and workstations at a scale of 1/2 inch = 1 foot. When applicable, provide desk and workstation electrical and communications locations. When applicable include controlled-circuit identification for each furniture receptacle and coordinate with the building electrical system circuits in accordance with ASHRAE 90.1 - IP. Critical dimensions include, but are not limited to clearances and aisle widths. Drawings must include layout for furniture systems workstations for coordination purposes. Label furniture with furniture item code identified in this specification. Submit grommet locations.

3.3.2 Furniture Installation Procedures

Complete installation in accordance with manufacturer's installation instructions, assembly manuals, warranty requirements and approved installation drawings. Also comply with the following requirements:

a. Use material handling equipment with rubber wheels.

b. Furniture and components must be installed level, plumb, square, and with proper alignment with adjoining furniture.

c. Match keys to locks and check locking mechanisms.

d. Check drawers, doors, lighting, and other operable items and mechanisms for proper operation.

e. Remove all protective wrapping tape, residue, and related type items.

f. Securely interconnect furniture components where required.

g. Securely attach and anchor furniture components to the building when required.

h. Securely anchor furniture such as shelving and storage units to the building when required by the manufacturer.

i. All items with an electrical plug, such as but not limited to task lighting and tables with electrical power, must be fully operational.

j. All hardwired furniture, such as but not limited to furniture systems, must be fully operational. Verify that voltage is present in electrical outlets. Verify controlled-circuit outlets are properly configured in accordance with the installation drawings.

k. Furniture must not block SIPRNET jacks or the jack enclosures on walls. Report conflicts to Contracting Officer to discuss resolution.

l. Upon completion of installation, all furniture must be completely cleaned, finished, leveled, aligned, operational and functional.

3.3.3 Furniture Communications Installation

3.4 CLEANING

Remove all packing materials and other trash from the jobsite. Upon completion of installation, all products must be clean, including inside all drawers and doors, and the area must be free of debris and left in a clean and neat condition. Any defects in or damage to furniture must be repaired or replaced and approved by the Contracting Officer. Damaged products that cannot be satisfactorily repaired must be replaced. Correct any problems with assembly and installation. Prior to any furniture repair, replacement, and/or assembly and installation corrections, protect the building surfaces.

3.5 OPERATION AND MAINTENANCE MANUALS

Submit the Furniture, Data Package 1 in accordance with Section 01 78 23 OPERATION AND MAINTENANCE DATA and include the following:

3.5.1 Assembly Manuals

Describe assembly and re-configuration procedures. Provide three sets of installation video tapes if available.

3.5.2 Installation Instructions

Provide a copy of the instructions used to install the furniture. Also describe any special procedures or helpful hints learned during the installation process.

3.5.3 Maintenance Manuals

Describe proper cleaning and minor repair procedures, include cleaning instructions for fabrics.

3.5.4 Electrical System Manuals

Describe the functions, configuration, and maintenance of the furniture electrical system (power). This information may be included in the

assembly or maintenance manuals.

3.5.5 Special Tools

Provide three sets of special tools necessary for assembly and disassembly of furniture and components from each manufacturer. Mark tool(s) with manufacturer and product information.

3.5.6 Furniture Drawings

Provide hard copy and electronic, showing installed furniture layout. Include all modifications. Provide electronic copies on a CD-ROM. Coordinate type (such as but not limited to Microstation, AutoCad and Revit) and version required with User. Include critical dimensions, and locations of building and furniture electrical and communications. Provide drawings at 1/4 inch = 1 foot scale, unless otherwise specified. Provide typical plans and isometrics/elevations of workstations at a scale of 1/2 inch = 1 foot. Code all furniture with furniture item code identified in this specification.

3.5.7 Furniture Listing

Provide complete listing, hard copy and electronic, of furniture provided. Include all modifications. Provide electronic copies on a CD-ROM. Coordinate type of electronic file required with User (such as but not limited to Word and Excel). Listing must include furniture item code and name used in FF&E Package, part/model numbers, fabrics and finishes for all components furnished. Organize listing by item name and code and provide building totals.

3.5.8 Order Form Documentation

Provide Order Form Documentation with Purchase Order number and project name and location to allow the User to follow up on warranty issues and help with future purchases.

-- End of Section --