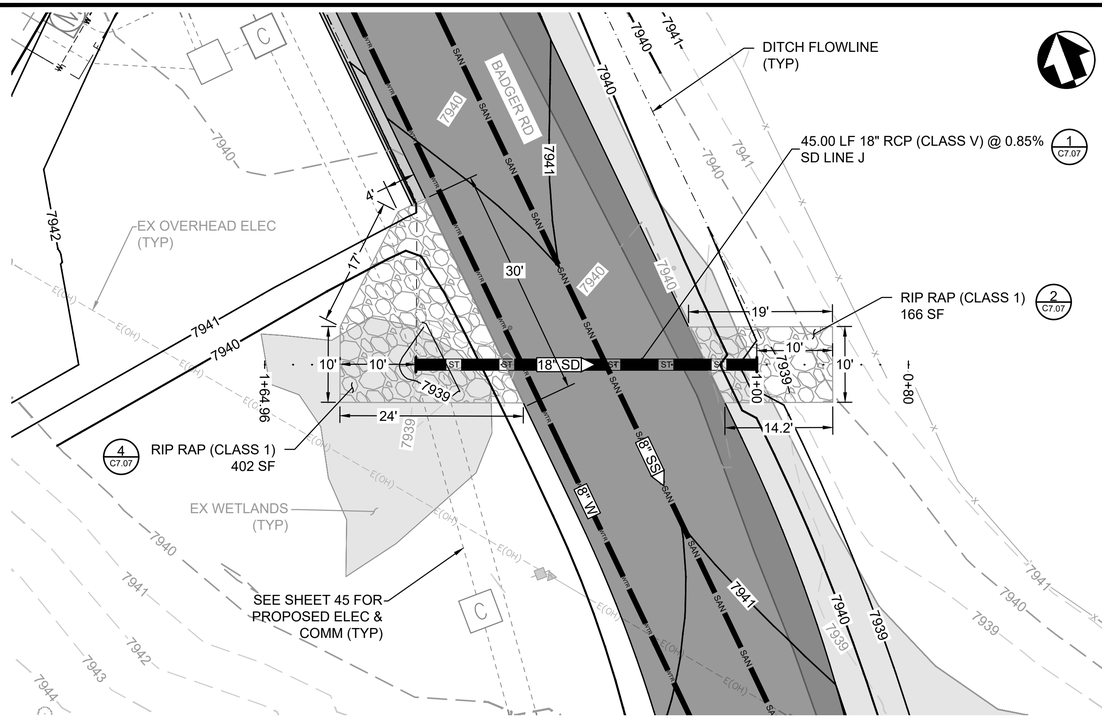

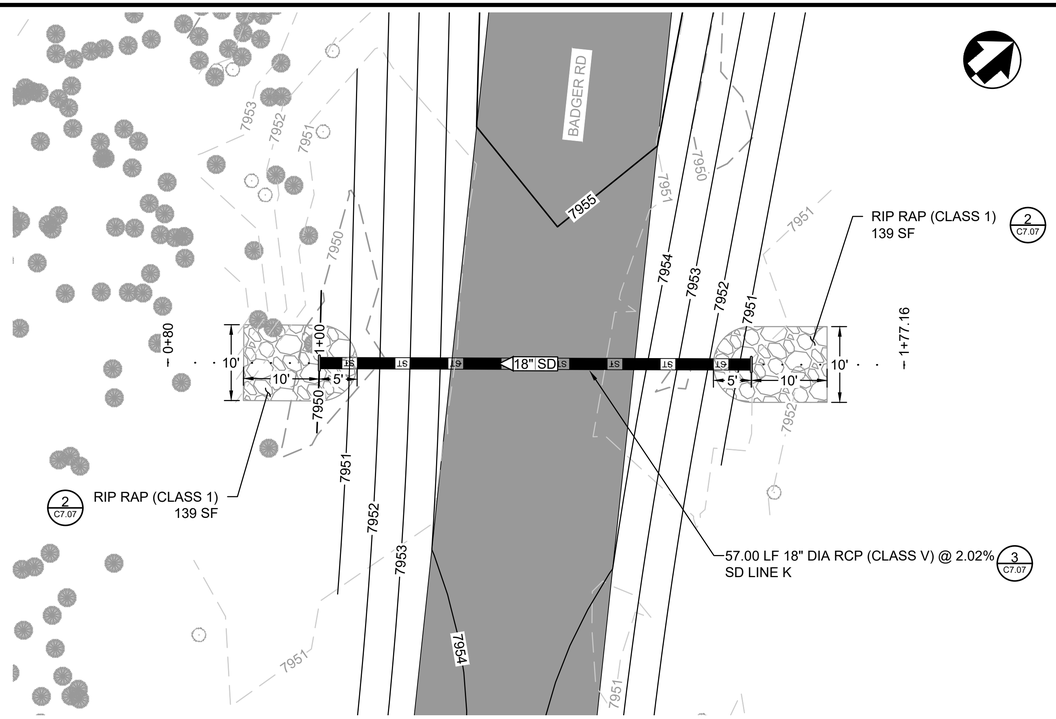

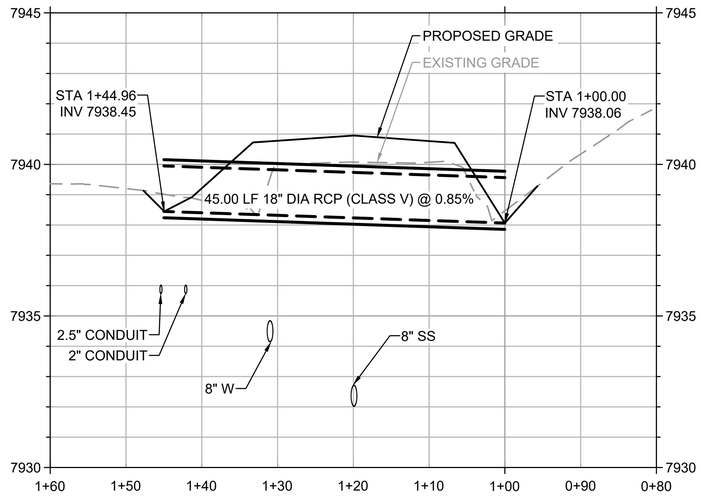

SD LINE J

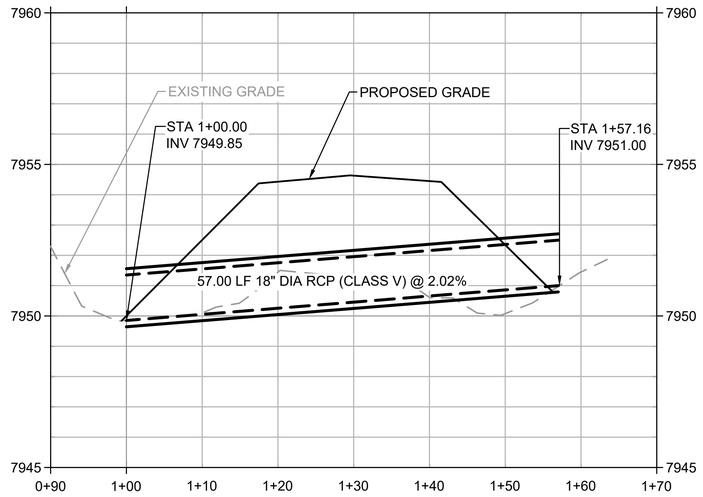

SD LINE K



10 0 10 20
HORIZONTAL SCALE OF FEET

VERTICAL SCALE OF FEET: 1" = 2.5'

NOTES:
1. MAINTAIN A MINIMUM 10-FT HORIZONTAL SEPARATION BETWEEN POTABLE WATER AND SANITARY SEWER LINES.
2. CROSSING LOCATION DEPTHS IN PROFILE VIEW ARE APPROXIMATE. AS-BUILT RECORD DRAWINGS WERE USED WHEN AVAILABLE. THE CONTRACTOR SHALL POTHOLE TO CONFIRM CROSSING DEPTHS IN THE FIELD.

A/E FIRM PRIME: STANTEC CHEYENNE, WY	DESIGNED: JC CADD: BB/PS/AS TECH. REVIEW: JC DATE: 06/18/2026	SUB SHEET NO. C5.09	TITLE OF SHEET CANYON VILLAGE STORM PLAN & PROFILE YELLOWSTONE NATIONAL PARK	DRAWING NO. 101 198433 PMIS / PKG NO. 326141 SHEET 33 OF 94

PLOT DATE: 6/18/2026 9:18 AM USER: SACKETT, ABBY
C:\USERS\ASACKETT\STANTEC\CRONIN, MEGHAN - NPS\YELL\DD\326141A_326104\CADV2022DRAWINGS\CIVIL\NE-CANYON\CANYONC5.06_CANYON_STORM_CULVERT_P&P.DWG

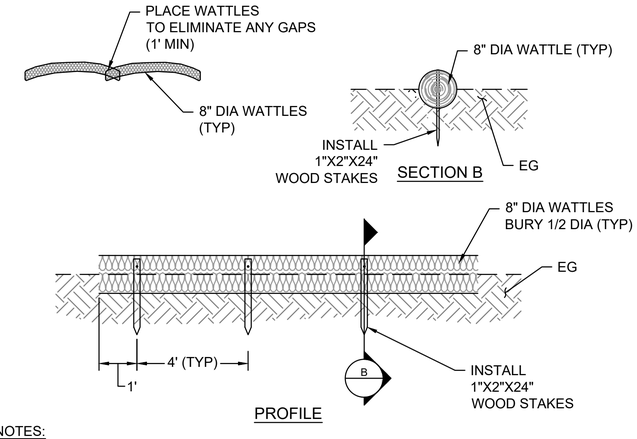

NOTES:

1. PLACEMENT OF WATTLES IS SUBJECT TO EXISTING CONDITIONS AND AS DIRECTED BY THE CONTRACTING OFFICER.
2. PLACE WATTLES AS SHOWN ON PLAN SHEETS.
3. PLACE GRAVEL BAGS OVER WATTLES WHEN STAKES CANNOT BE USED DUE TO BEDROCK.
4. UPON DEMOBILIZATION WATTLES SHALL BE REMOVED FROM SITE. COCONUT HUSK FROM FIBER ROLLS IS NOT TO BE SPREAD IN PLACE AS MULCHING MATERIAL.
5. SEE TECHNICAL SPECIFICATIONS SECTION 01 57 23 AND 31 25 00 FOR ADDITIONAL REQUIREMENTS.

1 C7.01 WATTLES
NOT TO SCALE

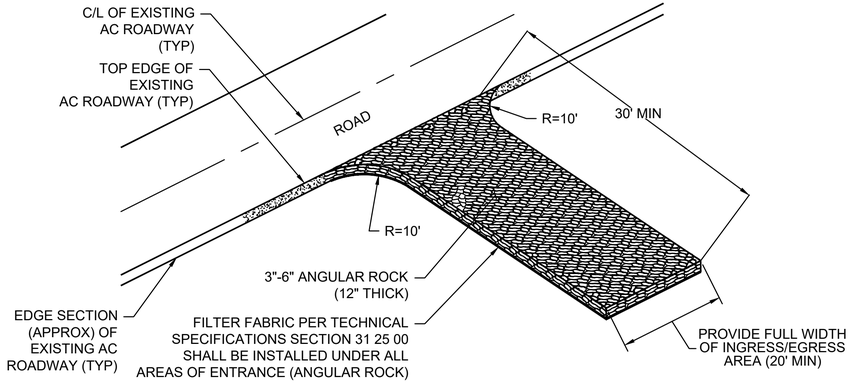

NOTES:

1. A STABILIZED CONSTRUCTION INGRESS AND EGRESS IS REQUIRED AT ALL ENTRANCES/EXITS FROM PAVEMENT TO NON-PAVEMENT AREAS.
2. THE ENTRANCE SHALL BE PROPERLY GRADED TO PREVENT RUNOFF FROM LEAVING THE CONSTRUCTION SITE.
3. THE ENTRANCE SHALL BE CONSTRUCTED ON LEVEL GROUND.
4. PERIODIC TOP DRESSING WITH ADDITIONAL STONE SHALL BE PROVIDED TO ENSURE THE INTEGRITY OF THE ENTRANCE DURING CONSTRUCTION.
5. THE ENTRANCE SHALL BE INSPECTED WEEKLY AND AFTER EACH RAINFALL IN ACCORDANCE WITH SWPPP.
6. ROCK MATERIAL SHALL BE ADDED WHEN SURFACE VOIDS ARE NOT VISIBLE.
7. ALL SEDIMENT DEPOSITS ON PAVED ROADWAYS SHALL BE REMOVED IMMEDIATELY.
8. ALL MATERIALS SHALL BE REMOVED AT COMPLETION OF CONSTRUCTION.
9. SEE TECHNICAL SPECIFICATIONS SECTION 01 27 23 AND 31 25 00 FOR ADDITIONAL REQUIREMENTS.

3 C7.01 STABILIZED TEMPORARY CONSTRUCTION ENTRANCE
NOT TO SCALE

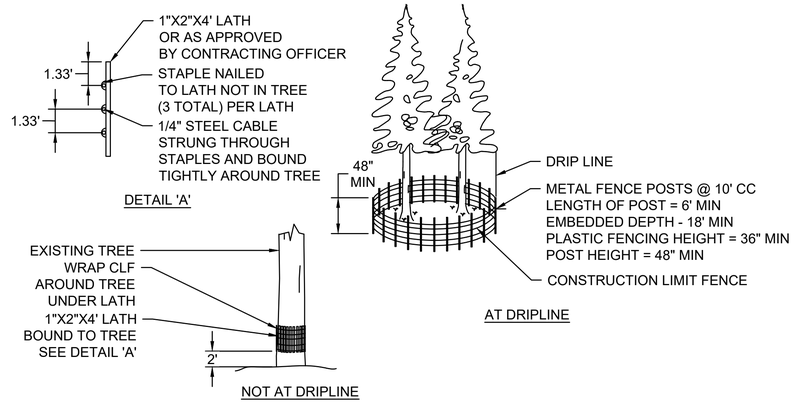

NOTES:

1. USE ORANGE PLASTIC FENCING MATERIALS OR 6' CHAIN LINK.
2. CLF AND TREE PROTECTION FENCE SHALL BE A MIN OF 48" HIGH. FOR TREES WITH DRIPLINES THAT OVERHANG THE CONSTRUCTION AREAS, THE LOCATION OF THE TREE PROTECTION FENCE SHALL BE DETERMINED IN THE FIELD BY THE CONTRACTING OFFICER.
3. THE DETAIL SHOWN IS FOR TREE PROTECTION. MATERIAL AND SPACING SHOWN ALSO APPLIES TO CLF.
4. LEAVE 12" SPACING BETWEEN CONSTRUCTION LIMIT FENCE AND GROUND.
5. REMOVE CONSTRUCTION LIMIT FENCE AFTER CONSTRUCTION HAS BEEN COMPLETED.

2 C7.01 CONSTRUCTION LIMIT FENCE AND TREE PROTECTION
NOT TO SCALE

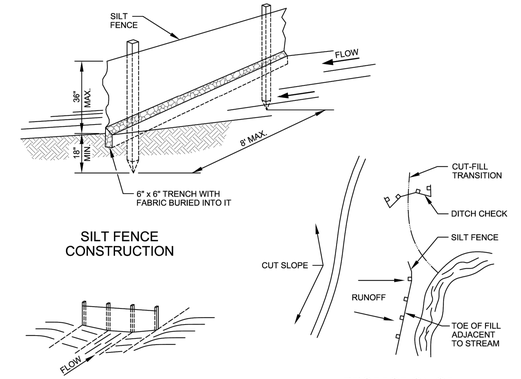

NOTES:

1. A SILT FENCE IS A VERTICAL BARRIER OF GEOTEXTILE FABRIC DESIGNED TO REMOVE PARTICLES FROM THE WATER PASSING THROUGH IT.
2. SILT FENCES ARE PLACED AROUND INLETS, ACROSS MINOR SWALES, AND AT THE TOE OF SLOPES ADJACENT TO STREAMS AND DEVELOPED PROPERTY. SILT FENCE USAGE SHALL BE LIMITED TO HANDLE AN AREA EQUIVALENT TO 1000 SQ-FT PER 10 FT OF FENCE. CAUTION SHOULD BE USED WHERE THE SITE SLOPE IS STEEPER THAN 1:1 H:V AND WATER FLOW RATES EXCEED 1 CU-FT. PER SECOND PER 10 FT OF FENCE.
3. THE SILT FENCE SHALL BE REBUILT AND GRADING CONTROLLED SO THAT WATER IS FILTERED UNIFORMLY ALONG THE FENCE. THE ENDS OF THE FENCE SHALL BE TAPERED UPHILL. POSTS SHALL BE DRIVEN TO A MIN. DEPTH OF 18 INCHES AT A MAX SPACING OF 8 FEET. WHERE AN 18-INCH DEPTH IS IMPOSSIBLE TO ACHIEVE, THE POSTS SHALL BE AQEQUATELY SECURED TO PREVENT OVERTURNING OF THE FENCE. THE FENCE SHALL BE ATTACHED TO THE POSTS BY WIRE, CORD, STAPLES, POCKETS, OR OTHER ACCEPTABLE MEANS. A MIN. OF 6-INCHES OF GEOTEXTILE FABRIC AT THE BOTTOM OF THE FENCE SHALL BE DRAPED INTO A TRENCH, BACKFILLED WITH SOIL AND COMPACTED. FENCE CONSTRUCTION SHALL BE ADEQUATE TO HANDLE THE STRESS OF THE SEDIMENT LOADING.
4. THE CONTRACTOR SHALL MAINTAIN THE SILT FENCE UNTIL THE FENCE IS REMOVED OR UNTIL THE PROJECT IS ACCEPTED. THE FABRIC SHOULD BE CHECKED FOR RIPS, TEARS, AND OTHER TYPES OF DETERIORATION AND REPLACED AS NEEDED. SEDIMENT DEPOSITS SHALL BE REMOVED WHEN THE DEPOSIT REACHES APPROXIMATELY ONE HALF THE HEIGHT OF THE SILT FENCE. WHEN PERMANENT SOIL EROSION CONTROL IS ACHIEVED, THE FENCE SHALL BE REMOVED AND THE ACCUMULATED SEDIMENT SPREAD AND SEEDED.

4 C7.01 SILT FENCE
NOT TO SCALE

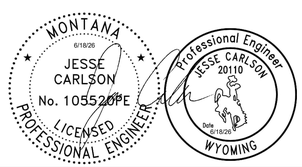

A/E FIRM PRIME: STANTEC CHEYENNE, WY	DESIGNED: JC CADD: BB/PS/AS TECH. REVIEW: JC DATE: 06/18/2026	SUB SHEET NO. C7.01	TITLE OF SHEET CIVIL DETAILS SHEET 1 OF 7 YELLOWSTONE NATIONAL PARK	DRAWING NO. 101 198433 PMIS / PKG NO. 326141 SHEET 34 OF 94

PLOT DATE: 6/18/2026 9:18 AM USER: SACKETT, ABBY
C:\USERS\ASACKETT\STANTEC\CRONIN, MEGHAN - NPS\YELL\DD\326141A_326104\CADV2022DRAWINGS\CIVILINE-CANYONICANYONIC7.01_DETAILS_1.DWG

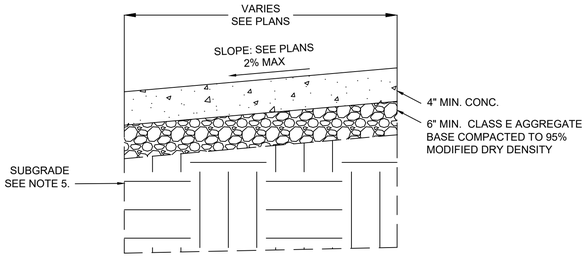

NOTES:

1. PORTLAND CEMENT CONCRETE SHALL CONFORM TO THE REQUIREMENTS OF SPECIFICATION SECTION 32 16 00.
2. CONTRACTION AND EXPANSION JOINTS SHALL COMPLY WITH SPECIFICATION SECTIONS 03 30 00 AND 32 16 00.
3. CLASS E AGGREGATE BASE REQUIREMENTS SHALL CONFORM TO SPECIFICATION SECTION 32 11 00.
4. NO OBSTRUCTION, SUCH AS UTILITY POLES, SIGNAL POLES AND CONTROLS, WATER METER BOXES, PULL BOXES, ETC. ARE ALLOWED WITHIN SIDEWALKS.
5. SUBGRADE COMPACTION SHALL CONFORM TO SPECIFICATION SECTION 32 11 00. SCARIFY 6" MINIMUM AND COMPACT TO A MINIMUM OF 95% RELATIVE COMPACTION (MODIFIED PROCTOR).

1 C7.02 CONCRETE SIDEWALKS AND PADS
NOT TO SCALE

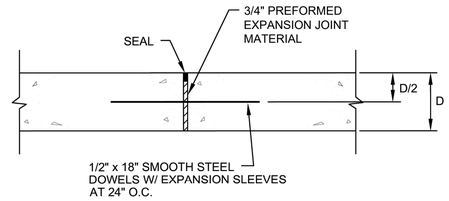

A - EXPANSION JOINT

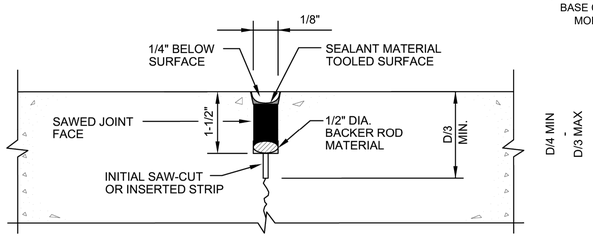

B - CONTRACTION JOINT

2 C7.02 JOINTS
NOT TO SCALE

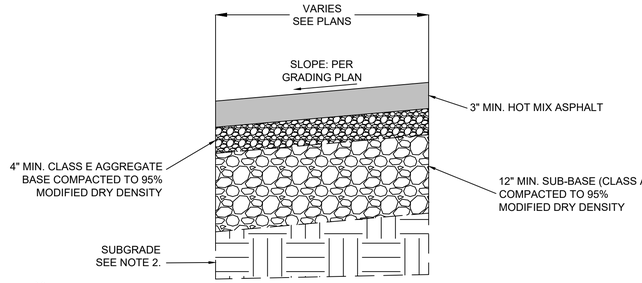

NOTES:

1. SEE SPECIFICATION SECTION 32 12 00 FOR ADDITIONAL DETAILS ON HOT MIX ASPHALT.
2. SUBGRADE COMPACTION SHALL CONFORM TO SPECIFICATION SECTION 32 11 00. SCARIFY 6" MINIMUM AND COMPACT TO A MINIMUM OF 95% RELATIVE COMPACTION (MODIFIED PROCTOR).

3 C7.02 ASPHALT PAVEMENT SECTION
NOT TO SCALE

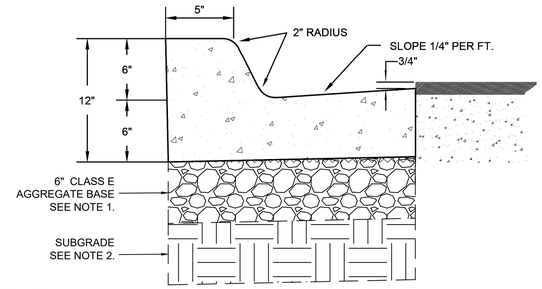

NOTES:

1. CONCRETE CURB AND GUTTER SHALL BE UNDERLAIN WITH 6" OF CLASS E AGGREGATE BASE, COMPACTED TO 95% RELATIVE COMPACTION (MODIFIED PROCTOR)
2. SUBGRADE COMPACTION SHALL CONFORM TO SPECIFICATION SECTION 32 11 00. SCARIFY 6" MINIMUM AND COMPACT TO A MINIMUM OF 95% RELATIVE COMPACTION (MODIFIED PROCTOR).
3. CONTRACTION AND EXPANSION JOINTS SHALL COMPLY WITH SECTION 610, FP-24. CONTRACTION JOINTS SHALL BE CONSTRUCTED BY SAWING OR SCORING. WHEN SCORING, A TOOL SHALL BE USED WHICH WILL LEAVE CORNERS ROUNDED AND DESTROY AGGREGATE INTERLOCK FOR SPECIFIED MINIMUM DEPTH.
4. NO CURB AND GUTTER SHALL BE PLACED WITHOUT A FINAL FORM INSPECTION BY THE CONTRACTING OFFICER.
5. CLASS 4000 CONCRETE SHALL BE USED, PER SECTION 32 16 00.

4 C7.02 CONCRETE CURB & GUTTER
NOT TO SCALE

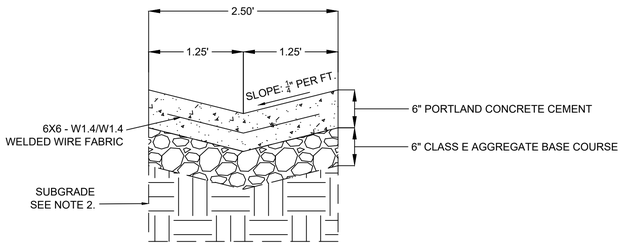

NOTES:

1. CONCRETE, BASE, AND SUBGRADE MATERIAL AND PREPARATION REQUIREMENTS SHALL MATCH THE REQUIREMENTS FOR COMBINED CURB AND GUTTER DETAIL.
2. SUBGRADE COMPACTION SHALL CONFORM TO SPECIFICATION SECTION 32 11 00. SCARIFY 6" MINIMUM AND COMPACT TO A MINIMUM OF 95% RELATIVE COMPACTION (MODIFIED PROCTOR).
3. NO VALLEY GUTTER SHALL BE PLACED WITHOUT FINAL FORM INSPECTION BY THE CONTRACTING OFFICER.
4. EDGE OF V-PAN SHALL BE PLACED 3/4" BELOW THE EDGE OF ASPHALT (3/4" LIP)
5. WELDED WIRE FABRIC MAY BE SUBSTITUTED WITH #3 BARS @ 12" O.C. EACH WAY

5 C7.02 VALLEY PAN (V-PAN)
NOT TO SCALE

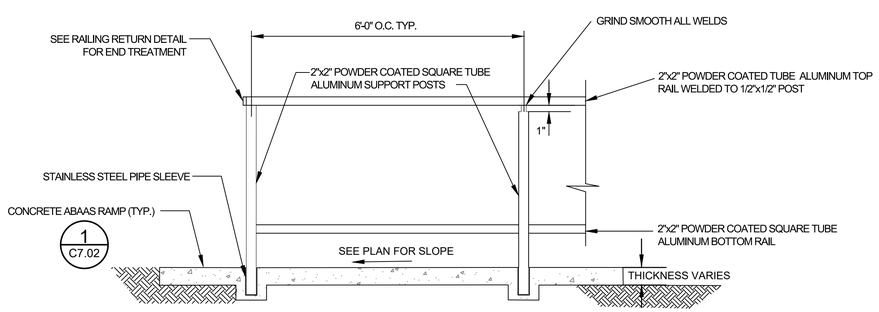

ELEVATION VIEW

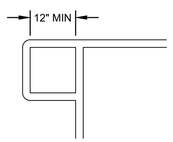

RAILING RETURN

NOTES:

1. 1/8-INCH WEEP HOLES ARE REQUIRED AT BOTTOMS AND LOW POINTS OF RAILS AND POSTS.
2. ALL ENDS TO BE CAPPED.
3. ALL SHARP EDGES TO BE GROUND SMOOTH.
4. SEE TECHNICAL SPECIFICATIONS SECTION 05 73 00.

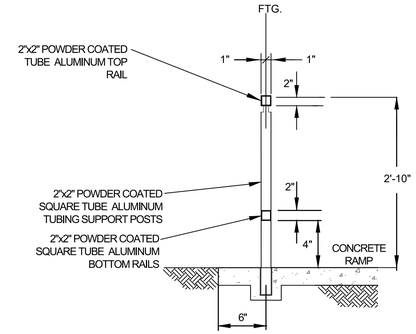

END VIEW

6 C7.02 HANDRAIL
NOT TO SCALE

MONTANA 6/18/26 JESSE CARLSON No. 105520PE LICENSED PROFESSIONAL ENGINEER

Professional Engineer JESSE CARLSON 20110 Date 6/18/26 WYOMING

A/E FIRM PRIME: STANTEC CHEYENNE, WY	DESIGNED: JC CADD: BB/PS/AS TECH. REVIEW: JC DATE: 06/18/2026	SUB SHEET NO. C7.02	TITLE OF SHEET CIVIL DETAILS SHEET 2 OF 7 YELLOWSTONE NATIONAL PARK	DRAWING NO. 101 198433 PMIS / PKG NO. 326141 SHEET 35 OF 94

PLOT DATE: 6/18/2026 9:18 AM USER: SACKETT, ABBY
C:\USERS\ASACKETT\STANTEC\CRONIN, MEGHAN - NPS\YELL\DD\326141A_326104\CADV2022DRAWINGS\CIVILINE-CANYON\C7.01_DETAILS_1.DWG

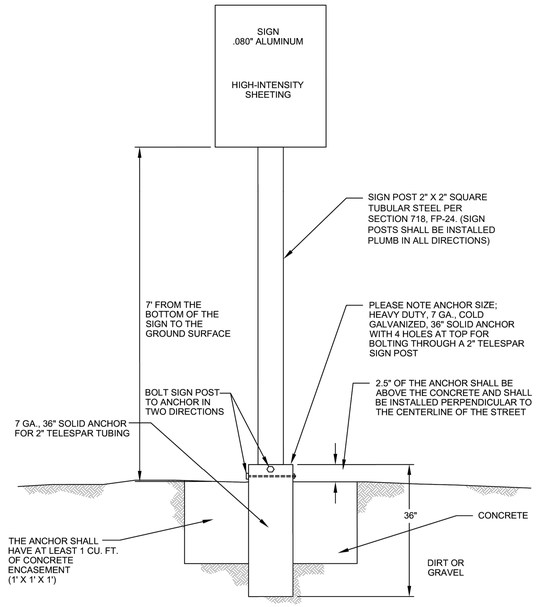

1 C7.03 SIGN INSTALLATION
NOT TO SCALE

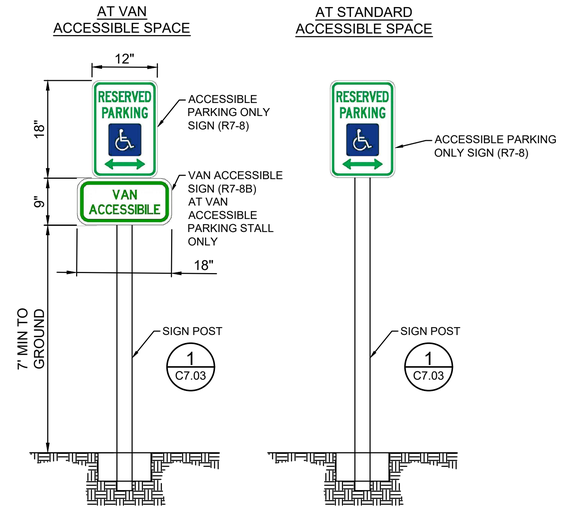

2 C7.03 ACCESSIBLE PARKING SIGNS
NOT TO SCALE

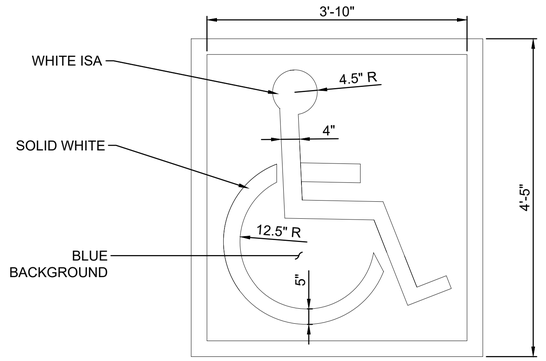

NOTES:

1. STRIPING AND MARKINGS ARE REPRESENTATIVE ONLY.
2. STRIPING AND MARKING LAYOUTS SHALL BE REVIEWED AND ACCEPTED BY CONTRACTING OFFICER PRIOR TO APPLYING PAINT.
3. REFER TO SPECIFICATION SECTION 32 17 00.

3 C7.03 ACCESSIBLE PARKING SYMBOL
NOT TO SCALE

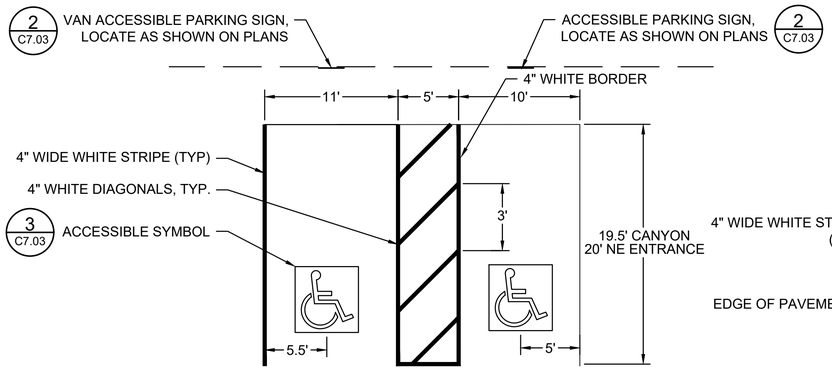

NOTES:

1. SEE PLANS FOR LAYOUT INFORMATION. PARKING AREAS SHALL BE STAKED AND VERIFIED BY CONTRACTING OFFICER PRIOR TO PARKING AREA CONSTRUCTION.
2. STRIPING AND MARKINGS ARE REPRESENTATIVE ONLY.
3. STRIPING AND MARKING LAYOUTS SHALL BE REVIEWED AND ACCEPTED BY CONTRACTING OFFICER PRIOR TO APPLYING PAINT.
4. ACCESSIBLE PARKING STALLS AND AISLES SHALL BE LEVEL WITH SURFACE SLOPES NOT EXCEEDING 1.5% IN ALL DIRECTIONS.
5. SEE SPECIFICATIONS SECTION 32 17 00.

4 C7.03 ACCESSIBLE PARKING STALLS
NOT TO SCALE

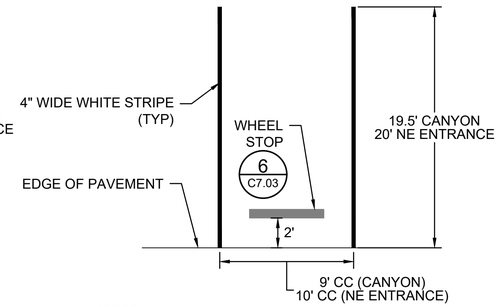

NOTES:

1. SEE PLANS FOR LAYOUT INFORMATION. PARKING AREAS SHALL BE STAKED AND VERIFIED BY CONTRACTING OFFICER PRIOR TO PARKING AREA CONSTRUCTION.
2. STRIPING AND MARKINGS ARE REPRESENTATIVE ONLY.
3. STRIPING AND MARKING LAYOUTS SHALL BE REVIEWED AND ACCEPTED BY CONTRACTING OFFICER PRIOR TO APPLYING PAINT.
4. SEE SPECIFICATIONS SECTION 32 17 00.

5 C7.03 PARKING STALL
NOT TO SCALE

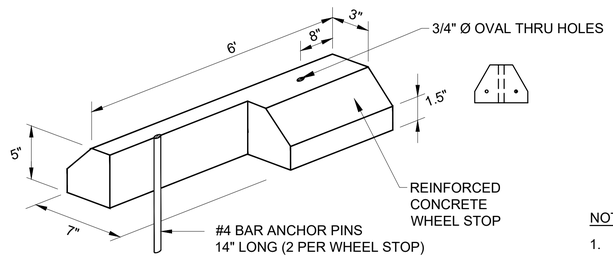

NOTES:

1. THE WHEEL STOPS SHALL BE ANCHORED WITH TWO (2) 14" ANCHOR STAKES FOR CAR STOPS.
2. WHEEL STOPS SHALL BE CENTERED IN PARKING SPACES AND PLACED TWO FEET FROM THE PARKING SPACE EDGE.
3. INSTALL PARKING WHEEL STOPS PER MANUFACTURER'S REQUIREMENTS.

6 C7.03 WHEEL STOP
NOT TO SCALE

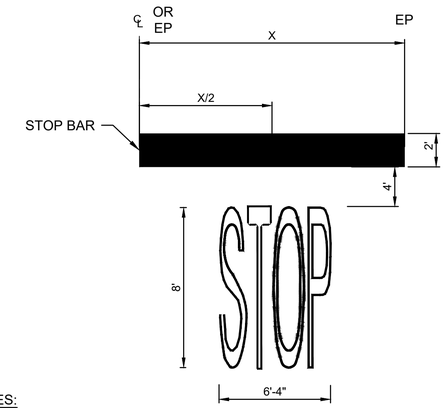

NOTES:

1. ALL MARKINGS IN WHITE TRAFFIC PAINT IN ACCORDANCE WITH THE TECHNICAL CONDITIONS.
2. "STOP" TRAFFIC MARKING SHALL BE CENTERED ON THE STOP BAR.
3. STOP BAR SHALL START FROM CENTER LINE OF ROAD AND CONTINUE TO EDGE OF PAVEMENT.
4. MINOR VARIATIONS IN DIMENSIONS MAY BE ACCEPTED BY THE ENGINEER.
5. PORTIONS OF A LETTER, NUMBER, OR SYMBOL MAY BE SEPARATED BY CONNECTIONS SEGMENTS NOT TO EXCEED 2" IN WIDTH.
6. REFER TO THE MOST RECENT VERSION OF FHWA MUTCD AND TECHNICAL SPECIFICATIONS SECTION 32 17 00.

7 C7.03 STOP ROADWAY MARKING
NOT TO SCALE

MONTANA 6/18/26 JESSE CARLSON No. 10552PE LICENSED PROFESSIONAL ENGINEER

Professional Engineer JESSE CARLSON 20110 WYOMING Date 6/18/26

A/E FIRM PRIME: STANTEC CHEYENNE, WY	DESIGNED: JC CADD: BB/PS/AS TECH. REVIEW: JC DATE: 06/18/2026	SUB SHEET NO. C7.03	TITLE OF SHEET CIVIL DETAILS SHEET 3 OF 7 YELLOWSTONE NATIONAL PARK	DRAWING NO. 101 198433 PMIS / PKG NO. 326141 SHEET 36 OF 94

PLOT DATE: 6/18/2026 9:18 AM USER: SACKETT, ABBY
C:\USERS\ASACKETT\STANTEC\CRONIN, MEGHAN - NPS\YELL\DD\326141A_326104\CADV2022DRAWINGS\CIVIL\NE-CANYON\CANYONIC7.01_DETAILS_1.DWG

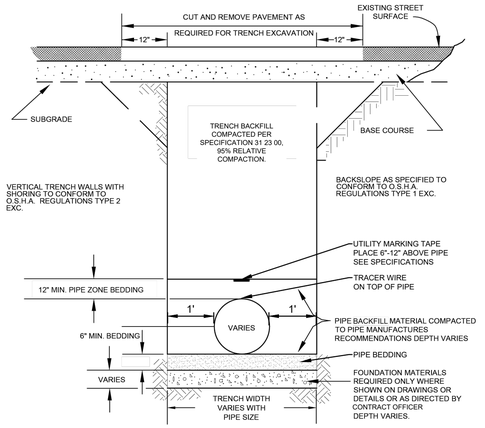

NOTES:

1. PIPE BEDDING CONSISTENT WITH SECTION 704.01 OF FP-24.
2. PIPE ZONE BACKFILL (UP TO 12" OVER PIPE) IS CONSISTENT WITH PIPE BEDDING MATERIAL. PIPE ZONE BACKFILL SHALL BE PLACED AND COMPACTED IN 6" LIFTS.

1 UTILITY TRENCH
C7.04 NOT TO SCALE

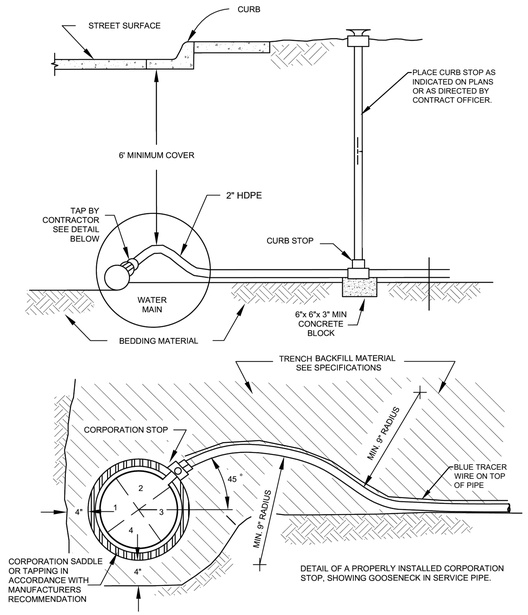

2 WATER SERVICE LINE
C7.04 NOT TO SCALE

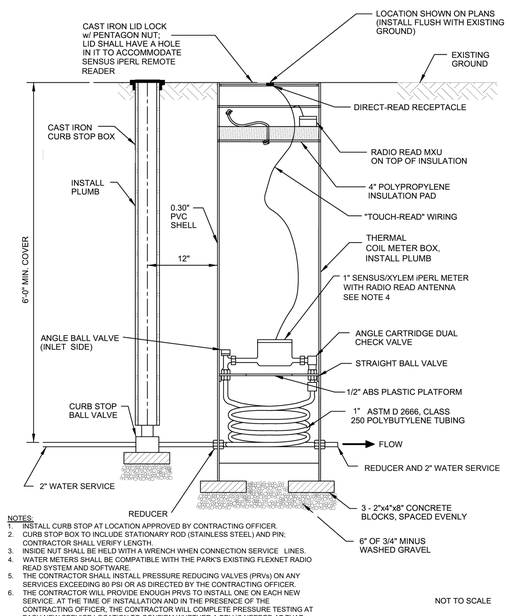

NOTES:

1. INSTALL CURB STOP AT LOCATION APPROVED BY CONTRACTING OFFICER.
2. CURB STOP BOX TO INCLUDE STATIONARY ROD (STAINLESS STEEL) AND PIN; CONTRACTOR SHALL VERIFY LENGTH.
3. INSIDE NUT SHALL BE HELD WITH A WRENCH WHEN CONNECTION SERVICE LINES.
4. WATER METERS SHALL BE COMPATIBLE WITH THE PARK'S EXISTING FLEXNET RADIO READ SYSTEM AND SOFTWARE.
5. THE CONTRACTOR SHALL INSTALL PRESSURE REDUCING VALVES (PRVs) ON ANY SERVICES EXCEEDING 80 PSI OR AS DIRECTED BY THE CONTRACTING OFFICER.
6. THE CONTRACTOR WILL PROVIDE ENOUGH PRVS TO INSTALL ONE ON EACH NEW SERVICE. AT THE TIME OF INSTALLATION AND IN THE PRESENCE OF THE CONTRACTING OFFICER, THE CONTRACTOR WILL COMPLETE PRESSURE TESTING AT EACH NEW SERVICE LOCATION TO CONFIRM WHETHER A PRV IS NEEDED AT THAT LOCATION. ANY UNINSTALLED PRVs WILL BE GIVEN TO THE CONTRACTING OFFICER AS SPARES.

NOT TO SCALE

3 WATER METER
C7.04 NOT TO SCALE

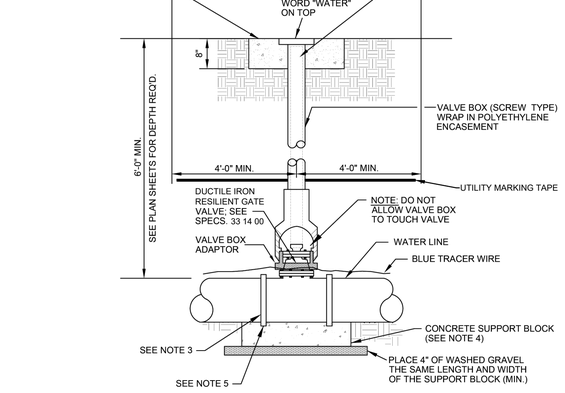

NOTES:

1. ALL BOLTS, NUTS & WASHERS ARE TO BE SERIES 300 STAINLESS STEEL.
2. ON GRAVELLED OR DIRT ROADS, OR WHERE REQUIRED AS A CORRECTIVE MEASURE, TOP OF VALVE BOX SHALL BE PLACED 4" - 6" BELOW FINISHED GRADE.
3. ALL VALVES ARE TO BE RESTRAINED TO PIPE. A FOSTER ADAPTOR SHALL BE USED TO RESTRAIN VALVES &/OR FITTINGS IN LOCATIONS WHERE CLOSE-COUPLED MECHANICAL JOINT CONNECTIONS ARE REQUIRED.
4. CONCRETE SUPPORT BLOCKS MAY BE PRE-CAST OR POURED IN PLACE. SUPPORT BLOCKS SHALL BE CONSTRUCTED OF 4000 PSI CONCRETE (MIN.). FOR VALVES 12" AND SMALLER, SUPPORT BLOCKS SHALL BE 18" X 18" X 6" IN SIZE. FOR VALVES LARGER THAN 12", SUPPORT BLOCK DIMENSIONS SHALL BE DETERMINED BY THE CONTRACT OFFICER.
5. IF CONCRETE SUPPORT BLOCKS ARE POURED IN PLACE, THEY SHALL BE FORMED. USE POLYETHYLENE TO SEPARATE FITTING FROM THE CONCRETE.
6. VALVE BOX ALIGNMENT TOOL SHALL BE USED TO CHECK CENTERING OF VALVE NUT AND BOX BEING PLUMB PRIOR TO ANY INSTALLATION OF PAVEMENT SURFACING.

4 WATER LINE VALVE AND BOX
C7.04 NOT TO SCALE

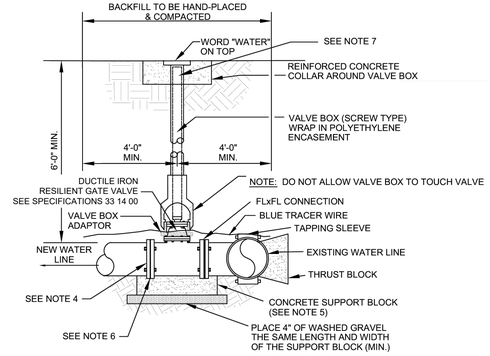

NOTES:

1. ALL BOLTS, NUTS & WASHERS ARE TO BE SERIES 300 STAINLESS STEEL.
2. BEGIN TRACER WIRE BY WRAPPING AROUND EXISTING WATER LINE.
3. ON GRAVELLED OR DIRT ROADS, OR WHERE REQUIRED AS A CORRECTIVE MEASURE, TOP OF VALVE BOX SHALL BE PLACED 4"-6" BELOW FINISHED GRADE.
4. ALL VALVES ARE TO BE RESTRAINED TO PIPE. A FOSTER ADAPTOR SHALL BE USED TO RESTRAIN VALVES &/OR FITTINGS IN LOCATIONS WHERE CLOSE-COUPLED MECHANICAL JOINT CONNECTIONS ARE REQUIRED.
5. CONCRETE SUPPORT BLOCKS MAY BE PRE-CAST OR POURED IN PLACE. SUPPORT BLOCKS SHALL BE CONSTRUCTED OF 4000 PSI CONCRETE (MIN.). FOR VALVES 12" AND SMALLER, SUPPORT BLOCKS SHALL BE 18" X 18" X 6" IN SIZE. FOR VALVES LARGER THAN 12", SUPPORT BLOCK DIMENSIONS SHALL BE DETERMINED BY THE CONTRACT OFFICER.
6. IF CONCRETE SUPPORT BLOCKS ARE POURED IN PLACE, THEY SHALL BE FORMED; USE POLYETHYLENE TO SEPARATE FITTING FROM THE CONCRETE.
7. VALVE BOX ALIGNMENT TOOL WILL BE USED TO CHECK THAT THE VALVE OPERATING NUT IS CENTERED WITHIN VALVE BOX AND THAT THE VALVE BOX IS PLUMB PRIOR TO ANY INSTALLATION OF PAVEMENT SURFACING.

5 TAPPING SLEEVE & VALVE CONNECTION TO EX WATER LINE
C7.04 NOT TO SCALE

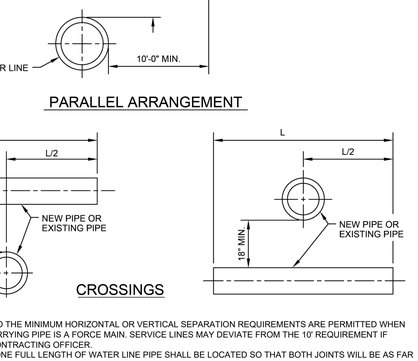

NOTES

1. NO EXCEPTION TO THE MINIMUM HORIZONTAL OR VERTICAL SEPARATION REQUIREMENTS ARE PERMITTED WHEN THE SEWAGE-CARRYING PIPE IS A FORCE MAIN. SERVICE LINES MAY DEVIATE FROM THE 10' REQUIREMENT IF APPROVED BY CONTRACTING OFFICER.
2. AT CROSSINGS, ONE FULL LENGTH OF WATER LINE PIPE SHALL BE LOCATED SO THAT BOTH JOINTS WILL BE AS FAR FROM THE SEWER LINE AS POSSIBLE.
3. "L" IS A STANDARD LENGTH OF PIPE AS SUPPLIED BY A PIPE MANUFACTURER.
4. WHERE THE 10-FOOT HORIZONTAL SEPARATION CANNOT BE MAINTAINED, THIS SEPARATION MAY BE REDUCED, PROVIDED THE BOTTOM OF THE WATER LINE IS AT LEAST 18 INCHES HIGHER THAN THE TOP OF THE SEWER LINE AND THE FOLLOWING ADDITIONAL REQUIREMENTS ARE MET IN ACCORDANCE WITH WPWSS:
   A. THE SANITARY SEWER OR STORM DRAIN SHALL BE CONSTRUCTED OF MATERIALS AND WITH JOINTS THAT ARE EQUIVALENT TO WATER MAIN STANDARDS OF CONSTRUCTION AND SHALL BE TESTED FOR WATER TIGHTNESS BY SEWER LINE METHODS PER SPECIFICATION 33 00 00, OR THE SANITARY SEWER, STORM SEWER, OR WATER MAIN SHALL BE PLACED IN A SEPARATE CASING PIPE. IN EITHER METHOD, THE LENGTH OF SEWER LINE OR CASING PIPE SHALL EXTEND A MINIMUM OF 9-FEET ON EACH SIDE OF THE CROSSING, AND;
   B. WATER MAINS PASSING UNDER SEWER LINES SHALL, IN ADDITION TO THE ABOVE REQUIREMENTS, BE PROTECTED BY PROVIDING ADEQUATE STRUCTURAL SUPPORT FOR THE SEWER LINE. SOIL STRUCTURAL SUPPORT SHALL CONSIST OF CEMENT TREATED BACKFILL (FLOWABLE FILL) BEARING ON UNDISTURBED SOIL.
5. WHEN THE REQUIRED HORIZONTAL AND/OR VERTICAL SEPARATIONS BETWEEN WATER LINES AND SEWER LINES CANNOT BE MET, THE SEWER MAY BE ENCASED IN ONE FOOT OF CEMENT TREATED BACKFILL (FLOWABLE FILL).
6. CEMENT TREATED BACKFILL (FLOWABLE FILL) SHALL MEET THE FOLLOWING CRITERIA:

INGREDIENTS	LBS/CY
CEMENT (0.45 SACK)	42
WATER (39 GALLONS)	325
COARSE AGGREGATE (SIZE NO. 57)	1,700
SAND (ASTM C-33)	1,845

   THE MAXIMUM DESIRED 28-DAY STRENGTH SHALL BE 30-60 PSI. THERE IS NO COMPACTION REQUIREMENT FOR CEMENT TREATED BACKFILL.
7. CEMENT-TREATED FILL MATERIALS & INSTALLATION SHALL COMPLY WITH WYOMING DEQ CHAPTER 12 REGULATIONS.

6 WATER AND SEWER LINE SEPARATION
C7.04 NOT TO SCALE

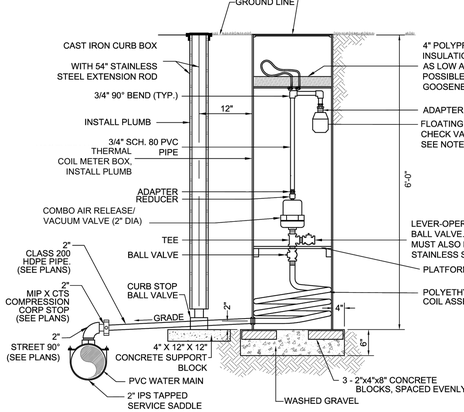

NOTES:

1. ALL FITTINGS MUST BE BRASS OR STAINLESS STEEL UNLESS SPECIFIED OTHERWISE.
2. PROVIDE BACKUP TO NUT IN PIT WHEN CONNECTING FITTING FROM OUTSIDE PIT TO PREVENT KINKING COIL
3. FLOATING BALL CHECK VALVE SHALL BE INFLOW PREVENTER RATED FOR POTABLE SUPPLY PROTECTION WITH BUG SCREEN, VAL-MATIC FLOODSAFE, OR APPROVED EQUAL BY THE CONTRACT OFFICER.
4. PEX TUBING FROM AIR/VAC TO FLOATING BALL CHECK VALVE SHALL BE ANCHORED TO THE SIDE OF THE PIT SO IT STANDS ERECT.
5. FLOATING BALL CHECK VALVE AND GOOSE NECK ASSEMBLY TO BE INSTALLED IF GROUNDWATER IS PRESENT, AS DETERMINED BY CONTRACT OFFICER.
6. INSTALLATION SHALL BE IN NON-TRAFFIC LOADING AREAS ONLY.

7 COMBINATION AIR RELEASE/VACUUM VALVE
C7.04 NOT TO SCALE

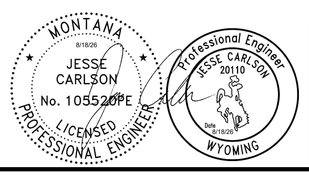

A/E FIRM	DESIGNED: JC	SUB SHEET NO.	TITLE OF SHEET: CIVIL DETAILS SHEET 4 OF 7	DRAWING NO. 101 198433
PRIME:	CADD: AS	C7.04	YELLOWSTONE NATIONAL PARK	PMIS / PKG NO. 326141
	TECH. REVIEW: JC			SHEET 37 OF 94
	DATE: 08/18/2026			

PLOT DATE: 8/18/2026 11:15 AM USER: SACKETT, ABBY
C:\USERS\ASACKETT\STANTEC\CRONIN, MEGHAN - NPS\YELL\DD\326141A_326104\CADV2022\DRAWINGS\CIVIL\NE-CANYONICANYONIC7.01_DETAILS_1.DWG

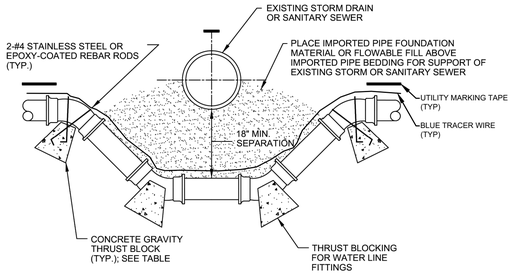

GRAVITY THRUST BLOCK - CY BASED ON 150 PSI MAIN PRESSURE		
PIPE SIZE	45° BEND	22 1/2° BEND
6"	1.0	0.5
8"	1.5	0.6
10"	2.0	0.8
12"	3.0	1.0

NOTE:
1. USE POLYETHYLENE TO SEPARATE FITTINGS FROM THE CONCRETE.
2. THRUST BLOCKS SHALL BE FORMED.

1 C7.05 THRUST BLOCKING FOR WATER LINE FITTINGS
NOT TO SCALE

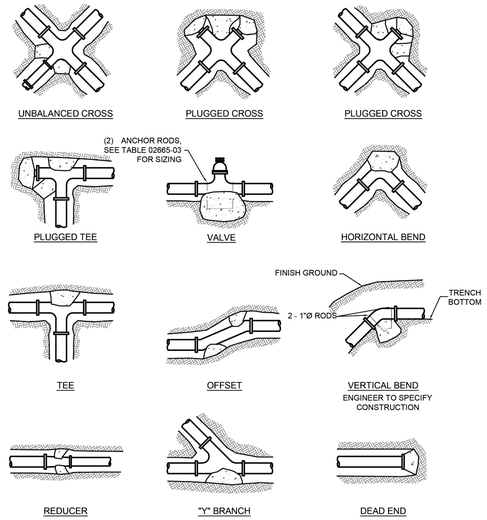

NOTES:
1. SIZE OF BLOCK SHALL BE A MINIMUM OF 6" THICK.
2. ALL BLOCKING SHALL BEAR AGAINST UNDISTURBED MATERIAL.
3. FITTINGS TO BE SEPARATED FROM THRUST BLOCK WITH AN APPROVED BOND BREAKER.

2 C7.05 THRUST BLOCKING
NOT TO SCALE

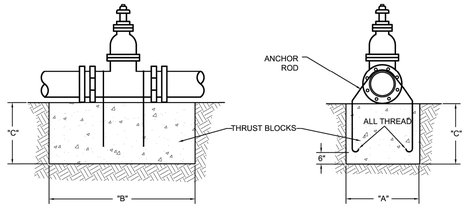

MINIMUM DIMENSIONS FOR THRUST BLOCKING								
ANCHOR ROD SIZE		3/4"	3/4"	3/4"	1"	1 1/8"	1 1/4"	1 3/8"
VALVE SIZE		6" & 8"	10"	12"	14"	16"	18"	24"
100 PSI	"A"	4'–4"	4'–4"	4'–4"	4'–4"	4'–4"	4'–4"	4'–4"
	"B"	4'–0"	4'–0"	4'–0"	4'–0"	4'–0"	4'–0"	4'–0"
	"C"	4'–0"	4'–0"	4'–0"	4'–0"	4'–0"	4'–0"	4'–0"
150 PSI	"A"	6'–5"	6'–5"	6'–5"	6'–5"	6'–5"	6'–5"	6'–5"
	"B"	4'–0"	4'–0"	4'–0"	4'–0"	4'–0"	4'–0"	4'–0"
	"C"	4'–0"	4'–0"	4'–0"	4'–0"	4'–0"	4'–0"	4'–0"
200 PSI	"A"	6'–6"	6'–6"	6'–6"	6'–6"	6'–6"	6'–6"	6'–6"
	"B"	5'–0"	5'–0"	5'–0"	5'–0"	5'–0"	5'–0"	5'–0"
	"C"	5'–0"	5'–0"	5'–0"	5'–0"	5'–0"	5'–0"	5'–0"
250 PSI	"A"	6'–5"	6'–5"	6'–5"	6'–5"	6'–5"	6'–5"	6'–5"
	"B"	6'–0"	6'–0"	6'–0"	6'–0"	6'–0"	6'–0"	6'–0"
	"C"	6'–0"	6'–0"	6'–0"	6'–0"	6'–0"	6'–0"	6'–0"
300 PSI	"A"	7'–8"	7'–8"	7'–8"	7'–8"	7'–8"	7'–8"	7'–8"
	"B"	6'–0"	6'–0"	6'–0"	6'–0"	6'–0"	6'–0"	6'–0"
	"C"	6'–0"	6'–0"	6'–0"	6'–0"	6'–0"	6'–0"	6'–0"

NOTES:
1. PRESSURES SHOWN ABOVE ARE MAXIMUM WORKING PRESSURE IN THE SYSTEM.
2. TO BE INSTALLED AS CALLED FOR AND AT THE LOCATIONS SHOWN ON THE PLANS.
3. COAT EXPOSED PORTIONS OF ANCHOR RODS WITH "KOPPERS" BITUMASTIC NO. 50 COATING OR APPROVED EQUAL.

3 C7.05 MINIMUM THRUST BLOCK DIMENSIONS
NOT TO SCALE

MINIMUM DIMENSIONS FOR THRUST BLOCKING										
FITTING SIZE	TEES & PLUGS		90° BENDS		45° BENDS & WYES		REDUCERS & 22 1/2° BENDS		11 1/4° BENDS	
	A	B	A	B	A	B	A	B	A	B
4"	1'–2"	1'–2"	1'–6"	1'–6"	0'–10"	0'–10"	0'–6"	0'–6"	0'–6"	0'–6"
6"	1'–11"	1'–11"	2'–2"	2'–2"	1'–7"	1'–7"	0'–10"	0'–10"	0'–6"	0'–6"
8"	2'–6"	2'–6"	3'–0"	3'–0"	2'–1"	2'–1"	1'–6"	1'–6"	1'–0"	1'–0"
10"	3'–3"	3'–3"	3'–10"	3'–10"	2'–9"	2'–9"	1'–11"	1'–11"	1'–0"	1'–0"
12"	3'–10"	3'–10"	4'–8"	4'–8"	3'–3"	3'–3"	2'–3"	2'–3"	1'–0"	1'–0"
14"	3'–10"	3'–10"	4'–11"	4'–11"	3'–5"	3'–5"	2'–5"	2'–5"	1'–6"	1'–6"
20"	5'–0"	5'–0"	6'–0"	6'–0"	4'–0"	4'–0"	3'–0"	3'–0"	2'–0"	2'–0"
24"	6'–0"	6'–0"	7'–0"	7'–0"	5'–0"	5'–0"	3'–0"	3'–0"	3'–0"	3'–0"
30"	7'–6"	7'–6"	8'–0"	8'–0"	6'–3"	6'–3"	4'–6"	4'–6"	3'–3"	3'–3"

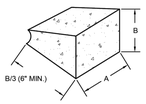

NOTES:
1. FITTINGS TO BE SEPARATED FROM BLOCKS WITH AN APPROVED BOND BREAKER, SUCH AS POLY WRAP.
2. ALL BLOCKS TO BEAR AGAINST UNDISTURBED MATERIAL.
3. DESIGN IS BASED ON 150 PSI MAIN PRESSURE AND 2000 PSF SOIL BEARING CAPACITY.

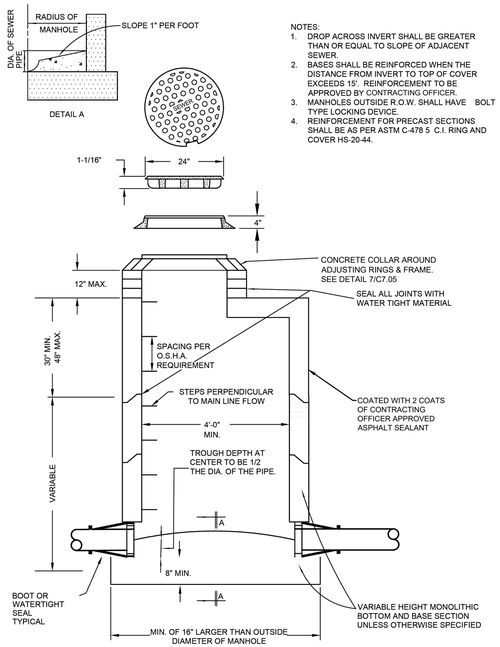

NOTES:
1. DROP ACROSS INVERT SHALL BE GREATER THAN OR EQUAL TO SLOPE OF ADJACENT SEWER.
2. BASES SHALL BE REINFORCED WHEN THE DISTANCE FROM INVERT TO TOP OF COVER EXCEEDS 15'. REINFORCEMENT TO BE APPROVED BY CONTRACTING OFFICER.
3. MANHOLES OUTSIDE R.O.W. SHALL HAVE BOLT TYPE LOCKING DEVICE.
4. REINFORCEMENT FOR PRECAST SECTIONS SHALL BE AS PER ASTM C-478 5 C.I. RING AND COVER HS-20-44.

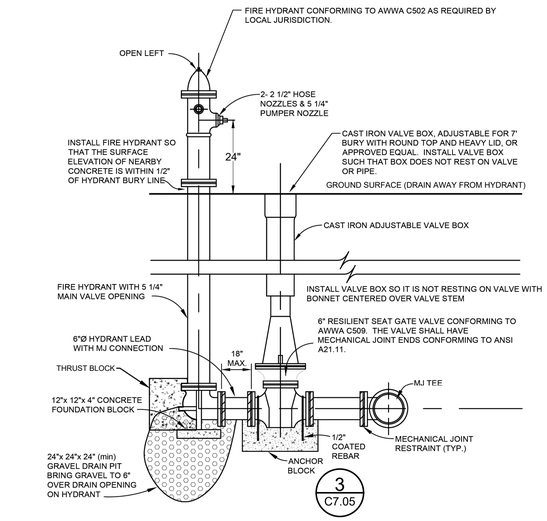

NOTES:
1. HYDRANT SHALL BE A MUELLER SUPER CENTURION 250.
2. METAL TO BE WRAPPED WITH 8 mil POLYETHYLENE.
3. TRACER WIRE SHALL BE INSTALLED PER SPECIFICATIONS.
4. FIRE HYDRANT BOLTS SHALL BE COVERED WITH 8 mil POLYETHYLENE PRIOR TO POURING CONCRETE THRUST BLOCKS.
5. FIRE HYDRANT MANUFACTURER AND PRODUCT DETAILS SHALL MEET THE REQUIREMENT OF YELLOWSTONE NP PUBLIC WORKS/MAINTENANCE DEPARTMENT TO ENSURE CONSISTENCY FOR MAINTENANCE/REPAIR.

4 C7.05 HYDRANT INSTALLATION
NOT TO SCALE

5 C7.05 FLATTOP MANHOLE
NOT TO SCALE

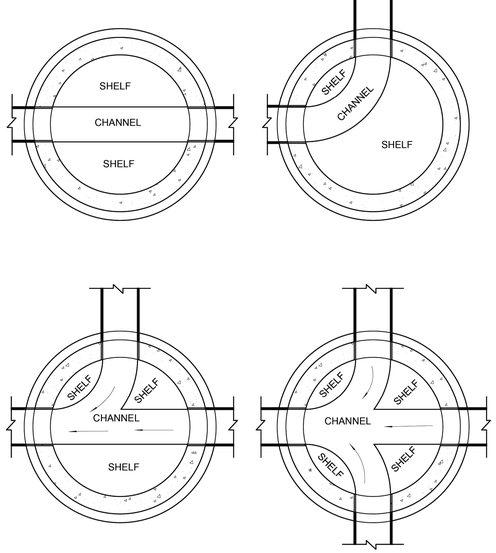

NOTES:
1. SLOPE ALL SHELVES TO CHANNEL AT 1" PER FOOT.
2. SEE PLAN-PROFILE SHEETS FOR SLOPE OF CHANNEL.

6 C7.05 MANHOLE CHANNEL
NOT TO SCALE

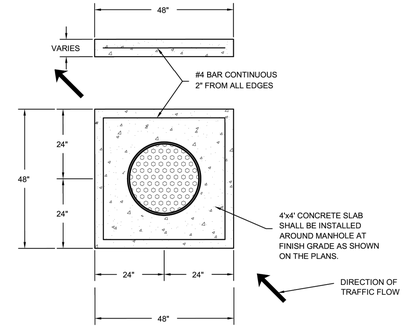

7 C7.05 CONCRETE COLLAR
NOT TO SCALE

MONTANA 6/18/26 JESSE CARLSON No. 10552PE LICENSED PROFESSIONAL ENGINEER

Professional Engineer JESSE CARLSON 20110 Date 6/18/26 WYOMING

A/E FIRM PRIME: STANTEC CHEYENNE, WY	DESIGNED: JC CADD: BB/PS/AS TECH. REVIEW: JC DATE: 06/18/2026	SUB SHEET NO. C7.05	TITLE OF SHEET CIVIL DETAILS SHEET 5 OF 7 YELLOWSTONE NATIONAL PARK	DRAWING NO. 101 198433 PMIS / PKG NO. 326141 SHEET 38 OF 94

PLOT DATE: 6/18/2026 9:18 AM USER: SACKETT, ABBY
C:\USERS\ASACKETT\STANTEC\CRONIN, MEGHAN - NPS\YELL\DD\326141A_326104\CADV2022\DRAWINGS\CIVIL\NE-CANYONICANYONIC7.01_DETAILS_1.DWG