INDIAN HEALTH SERVICES

INSCRIPTION HOUSE HEALTH CENTER

Indian Rte 6290, Tonalea, AZ 86044

iHouse Apartment

Project No: 23-390

Issue Date: August 13, 2024

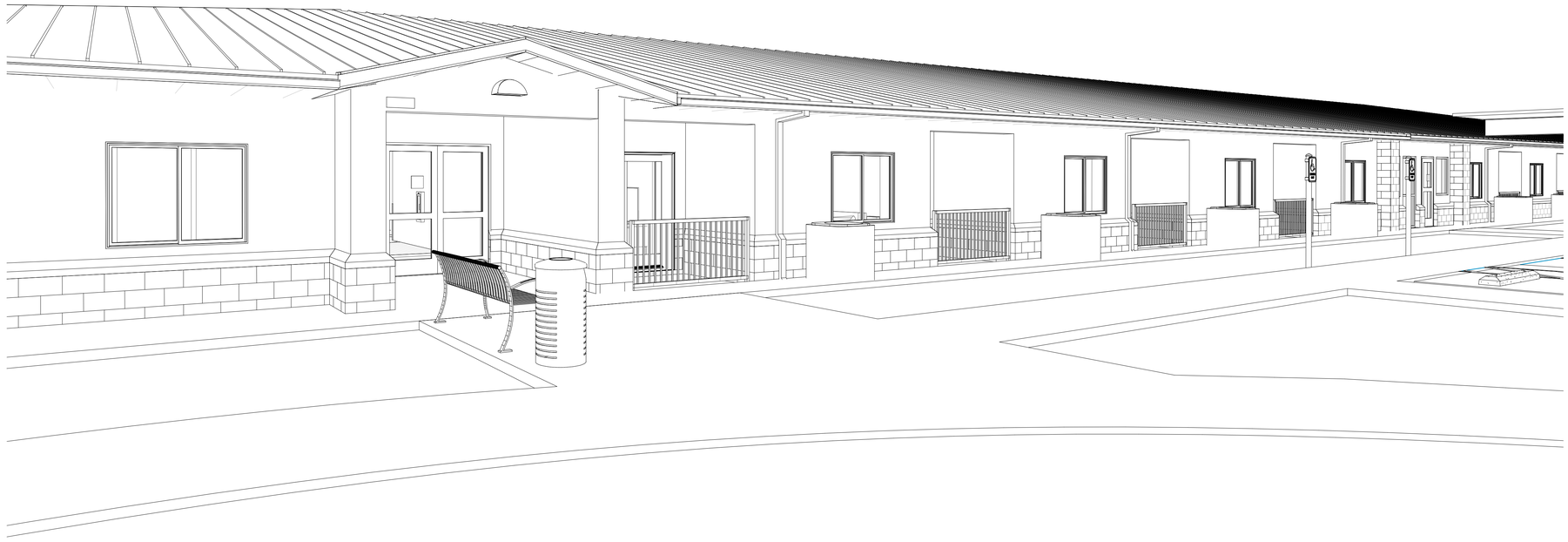

PHASE 4 - Final Construction Documents

JSRa

JOHNSON SMITTHIPONG & ROSAMOND ASSOCIATES, INC.

5210 E Williams Cir • Ste 600 • Tucson, AZ 85711
(520) 547-7904 • www.jsra.com

Consultants:

ISSUED FOR INTERIM REVIEW

THIS DOCUMENT IS NOT TO BE USED FOR REGULATORY APPROVAL, PERMIT, OR CONSTRUCTION

Vernon Rosamond
Arizona Lic #: 9793
Date: 8/13/24

iHOUSE APARTMENT

Tonalea, AZ 86044

U. S. DEPARTMENT OF HEALTH AND HUMAN SERVICES
INDIAN HEALTH SERVICE

NAVAJO AREA OFFICE

No.	Date	Description

Issue Date:	8/13/24
Project No:	23-390
Scale:	
Drawn By:	KADDOURA
Checked By:	HARGREAVES

PHASE IV (Final CD)

Sheet Title:

COVER SHEET

Sheet Number:

G000

Autodesk Docs://23-390 IHS iHouse Apt v2023/23-390 06 Arch iHouse Apt 2023.rvt
8/13/2024 2:32:54 PM

ABBREVIATIONS

BLK(G)	BLOCK(ING)
BM	BENCH MARK
BO	BOTTOM OF
BOT	BOTTOM
BRG	BEARING
BRK	BRICK
BSMT	BASEMENT
BUR	BUILT UP ROOFING
CMWP	COMPOSITE METAL WALL PANEL
C	CHANNEL
C/C	CENTER TO CENTER
CAB	CABINET
CB	CHALK BOARD,CATCH BASIN
CEM	CEMENT
CG	CORNER GUARD
CI	CAST IRON
CIP	CAST IN PLACE
CJ	CONTROL JOINT
CLG	CEILING
CLR	CLEAR(ANCE)
CMP	CORRUGATED METAL PIPE
CMTS	COMMENTS
CMU	CONCRETE MASONRY UNIT
CO	CLEAN OUT
COL	COLUMN
COMB	COMBINATION
CONC	CONCRETE
CONN	CONNECTION
CONST	CONSTRUCTION
CONT	CONTINUOUS OR CONTINUE
CORR	CORRIDOR,CORRUGATED
CPT	CARPET
CR	CLEAN ROOM
CSK	COUNTERSINK
CT	CERAMIC TILE
CU	CUBIC
CU	FT CUBIC FOOT (FEET)
CW	COLD WATER
D	DEPTH
DEMO	DEMOLISH, DEMOLITION
DF	DRINKING FOUNTAIN
DIA	DIAMETER
DIAG	DIAGONAL
DIM	DIMENSION
DISP	DISPENSER
DN	DOWN
DO	DITTO
DP	DAMPPROOFING
DR	DOOR
DS	DOWNSPOUT
DTL	DETAIL
DWG	DRAWING
DWC	DRYWALL CHANNELS (HAT)
E	EAST
EA	EACH
EF	EACH FACE
EJ	EXPANSION JOINT
ELEC	ELECTRIC(AL)
ELEV	ELEVATION,ELEVATOR
EMER	EMERGENCY
EP	EPOXY PAINT
EPS	EXPANDED POLYSTYRENE
EQ	EQUAL EQUIP EQUIPMENT
ES	EXPOSED STRUCTURE
EST	ESTIMATE
EW	EACH WAY
EWC	ELECTRIC WATER COOLER
EXC	EXCAVAT(E)(ION)
EXH	EXHAUST
EXIST	EXISTING
EXP	EXPANSION, EXPOSED
EXT	EXTERIOR
EIFS	EXT. INSULATION FINISH SYSTEM
F	FAHRENHEIT
FA	FIRE ALARM
FAB	FABRICATE
FD	FLOOR DRAIN
FDN	FOUNDATION
FE(C)	FIRE EXTINGUISHER(CABINET)
FF	FINISH FLOOR
FHC	FIREHOSE CABINET
FHR	FIREHOSE RACK
FIN	FINSH(ED)
FL	FLOOR
FLA	FLASHING
FLEX	FLEXIBLE
FLUOR	FLUORESCENT
FO	FACE OF
FP	FIREPROOF
FR	FIRE RETARDANT
FRP	FIBER REINFORCED PLASTIC
FT	FOOT,FEET
FTG	FOOTING
FUR	FURRED(ING)
FUT	FUTURE
GA	GAGE,(GUAGE)
GALV	GALVANIZED
GC	GENERAL CONTRACT(OR)
GD	GRADE
GL	GLASS, GLAZING
GWB	GYPSUM WALLBOARD
GYP	GYPSUM
H(T)	HEIGHT
HB	HOSE BIBB
HC	HOLLOW CORE
HDBD	HARDBOARD
HD	HEAVY DUTY
HDWD	HARDWOOD
HDWR	HARDWARE
HM	HOLLOW METAL
HORZ	HORIZONTAL
HP	HIGH POINT
HR	HOUR
HVAC	HEATING/VENTILATING/ AIR CONDITIONING
HW	HOT WATER
ICMWP	INSULATED COMPOSITE METAL WALL PANEL
ID	INSIDE DIAMETER
IE	INVERT ELEVATION
IN	INCH(ES)
INCL	INCLUDING
INSUL	INSULATION
INT	INTERIOR
JC	JANITORS CLOSET
JST	JOIST
JT	JOINT
KD	KNOCKED DOWN
KIT	KITCHEN
KO	KNOCK OUT
KP	KICK PLATE
L	LENGTH,LONG
LAB	LABORATORY
LAM	LAMINATE
LAV	LAVATORY
LF	LINEAL FEET
LH	LEFT HAND
LL	LIVE LOAD
LLH	LONG LEG HORIZONTAL
LLV	LONG LEG VERTICAL
LP	LOW POINT
LT	LIGHT
LTWT	LIGHTWEIGHT
LVR	LOUVER
MAS	MASONRY
MAX	MAXIMUM
MATL	MATERIAL
MED	MEDIUM
MECH	MECHANICAL
MET	METAL
MEZZ	MEZZANINE
MFR	MANUFACTURER
MH	MANHOLE
MM	MILLIMETER
MIN	MINIMUM
MISC	MISCELLANOUS
MO	MASONRY OPENING
MOD	MODULAR
MOV	MOVABLE
MTD	MOUNTED
MWP	METAL WALL PANEL (SYSTEM)
N	NORTH
NA	NOT APPLICABLE
NIC	NOT IN CONTRACT
NOM	NOMINAL
NRC	NOISE REDUCTION COEFFICIENTS
NTS	NOT TO SCALE
NO	NUMBER
OA	OVERALL
OC	ON CENTER(S)
OD	OUTSIDE DIAMETER
OFF	OFFICE
OH	OVERHEAD,OPPOSITE HAND
OPG	OPENING
OPP	OPPOSITE
ORD	OVERFLOW ROOF DRAIN
P	PAINT(ED)
PAR	PARALLEL
PART	PARTITION
PART BD	PARTICLE BOARD
PC	PIECE
PCC	PRECAST CONCRETE
PCF	POUNDS PER CUBIC FOOT
PREFAB	PERFORATE(D)
PERIM	PERIMETER
PERP	PERPENDICULAR
PF	PREFABRICATED
PJ	PANEL JOINT
PL	PLASTER,PLATE,PROPERTY LINE
PLBG	PLUMBING
PLAM	PLASTIC LAMINATE
PLF	POUNDS PER LINEAL FOOT
PNL	PANEL
PO	POWER OPERATED
PR	PAIR
PSF	POUNDS PER SQUARE FOOT
PSI	POUNDS PER SQUARE INCH
PT	POINT
PTD	PAPER TOWEL DISPENSER
PTR	PAPER TOWEL RECEPTOR
PVC	POLYVINYL CHLORIDE
PVMT	PAVEMENT
PLWD	PLYWOOD
QT	QUARRY TILE
QTR	QUARTER
QTY	QUANTITY
(R)	RECESSED
R	RADIUS,RISER ROUND
RA	RETURN AIR
RB	RESILIENT BASE
RCP	REINFORCED CONCRETE PIPE, REFLECTED CEILING PLAN
RD	ROOF DRAIN
RE(F)	REFERENCE
RELO	RELOCATION
REPL	REPLACE
RES	RESILIENT
REV	REVISION(S),REVISED
RF	RIGID FIBERGLASS
RFG	ROOFING
RH	RIGHT HAND
RM	ROOM
RO	ROUGH OPENING
ROW	RIGHT OF WAY
RRF	ROLLED RUBBER FLOORING
REQ'D	REQUIRED
RWL	RAINWATER LEADER
S	SEALED, SOUTH
(S)	SURFACE MOUNTED
SC	SOLID CORE, SEALED CONCRETE
SCHED	SCHEDULE
SECT	SECTION
SD	STORM DRAIN
SDG	SIDING
SF	SQUARE FEET
SHT	SHEET
SHWR	SHOWER
SIM	SIMILAR
SL	SHEET LINOLEUM
SM	SHEET METAL
SP	SOUNDPROOF
SPECS	SPECIFICATIONS
SPKR	SPEAKER
SPL	SPECIAL
SQ	SQUARE
SS	SERVICE SINK
SST	STAINLESS STEEL
STD	STANDARD ST STEEL, STREET
STOR	STORAGE
STRUC	STRUCTURAL
SUSP	SUSPENDED
SV	SEAMLESS VINYL
SW	SWITCH
SWR	SEWER
SYM	SYMMETRY(ICAL)
T	THICKNESS, TEE
TD	TRENCH DRAIN
T&G	TONGUE AND GROOVE
TB	TACKBOARD TEL TELEPHONE
TEMP	TEMPERATURE,TEMPORARY
TERR	TERRAZZO
THK	THICK(NESS)
TO	TOP OF
TOC	TOP OF CONCRETE
TOIL	TOILET
TOP	TOP OF PARAPET
TOS	TOP OF STEEL
TOW	TOP OF WALL
TPD	TOILET PAPER DISPENSER
TV	TELEVISION
TYP	TYPICAL
U	URINAL
UG	UNDERGROUND
UL	UNDERWRITERS LABORATORY
UNF	UNFINISHED
UNO	UNLESS NOTED OTHERWISE
VB	VAPOR BARRIER
VCT	VINYL COMPOSITION TILE
VERT	VERTICAL
VNR	VENEER
VPL	VENEER PLASTER
VIF	VERIFY IN FIELD
VWC	VINYL WALL COVERING
W	WIDTH, WIDE, WEST
W/	WITH
W/O	WITHOUT
W/W	WALL TO WALL
WC	WATER CLOSET
WD	WOOD
WDW	WINDOW
WH	WALL HUNG, WATER HEATER
WI	WROUGHT IRON
WM	WIRE MESH
WP	WATERPROOFING
WR	WATER REPELLENT
WS	WEATHERSTRIP
WSCT	WAINSCOT
WT	WEIGHT
WWF	WELDED WIRE FABRIC
YD	YARD

PROJECT DIRECTORY

OWNER
NAVAJO AREA INDIAN HEALTH SERVICE
272 HIGHWAY 264
WINDOW ROCK, AZ 86515
CONTACT: ANTOINE PANTHER
PHONE: (928) 871-5823

ARCHITECT
JOHNSON SMITTHIPONG & ROSAMOND
5120 E. WILLIAMS CIR, SUITE 600
TUCSON, AZ 85711
CONTACT: DANIEL HARGREAVES
PHONE: (520) 547-7904

CIVIL ENGINEER
DOWL
4686 EAST VAN BUREN STREET, SUITE 175
PHOENIX, AZ 85008
CONTACT: RUDY ING
PHONE: (480) 753-0800

STRUCTURAL ENGINEER
SCHNEIDER & ASSOCIATES
STRUCTURAL ENGINEERS, INC
435 EAST 9TH STREET
TUCSON, AZ 85705
CONTACT: RON SCHNEIDER
PHONE: (520) 512-8183

ELECTRICAL/MECHANICAL ENGINEER
BERNHARD TME
2990 N SWAN RD., SUITE 227
TUCSON, AZ 85712
CONTACT: MARK ALVAREZ
PHONE: (520) 247-3443

CODE DATA & STANDARDS

INTERNATIONAL BUILDING CODE 2021

OCCUPANCY	R-2
CONSTRUCTION TYPE	V-B
SEISMIC ZONE	REFER TO STRUCTURAL
SPRINKLERS	FULLY SPRINKLERED

2021 INTERNATIONAL BUILDING CODE
2021 INTERNATIONAL PLUMBING CODE
2021 INTERNATIONAL MECHANICAL CODE
2021 INTERNATIONAL ENERGY CONSERVATION CODE
2021 INTERNATIONAL FIRE CODE
2017 NATIONAL ELECTRIC CODE
2010 ARCHITECTURAL BARRIERS ACT
2021 A/E IHS DESIGN GUIDE
2021 NFPA 101 - LIFE SAFETY CODE
2021 NFPA 72
2021 NFPA 10
2021 NFPA 13
2021 NFPA 20
2021 NFPA 22
2021 NFPA 24

GENERAL ARCHITECTURAL NOTES

1. ALL DIMENSIONS GIVEN ARE TO FACE OF STUD. EXCEPTIONS AS INDICATED ON THE DOCUMENTS.
2. LARGE SCALE DETAILS AND PLANS TAKE PRECEDENCE OVER SMALL SCALE DRAWINGS.
3. CIVIL DRAWINGS FINISH FLOOR DATUM ELEVATION EQUALS ARCHITECTURAL ELEVATION OF 0'=0" FOR EACH BUILDING INDEPENDANT OF OTHER BUILDINGS.
4. COORDINATE AND VERIFY ALL DIMENSIONS, OPENINGS AND CONDITIONS WITH CIVIL, STRUCTURAL, MECHANICAL, ELECTRICAL AND ALL OTHER PERTINENT DRAWINGS AND TRADES PRIOR TO CONSTRUCTION. NOTIFY ARCHITECT OF DISCREPANCIES PRIOR TO FABRICATION AND INSTALLATION.
5. FIRE RATINGS SHALL BE MAINTAINED AT FIRE RATED PARTITIONS BY A U.L. ASSEMBLY AT GAPS AND VOIDS CREATED BY PENETRATIONS, STRUCTURAL MEMBERS AND INTERSECTIONS WITH ADJACENT SURFACES.
6. ALL WORK SHALL BE PERFORMED IN ACCORDANCE WITH APPLICABLE CODES AND REGULATIONS.

PROJECT LOCATION

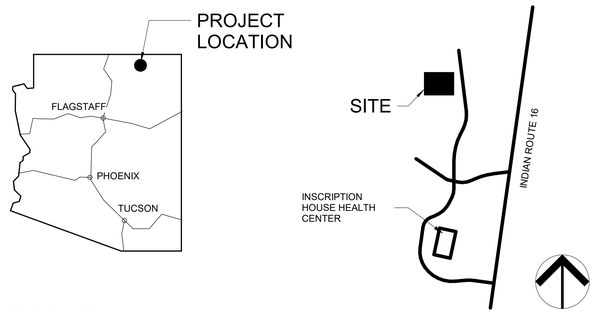

GPS COORDINATES: 36.59716, -110.79115

SHEET INDEX

Sht No	Sheet Name
GENERAL	
G000	COVER SHEET
G001	INFORMATION SHEET
G101	CODE SHEET
CIVIL	
C001	NOTES SHEET
C002	UTILITY NOTES SHEET
C101	SITE PLAN
C201	GRADING PLAN
C301	UTILITY PLAN
C302	ROAD EXTENSION PLAN & PROFILE I
C303	ROAD EXTENSION PLAN & PROFILE II
C500	DETAILS I
C501	DETAILS II
C502	DETAILS III
C503	DETAILS IV
C504	DETAILS V
STRUCTURAL	
S001	STRUCTURAL NOTES
S002	SPECIAL INSPECTIONS,I.O.D.
S121	FOUNDATION PLAN WEST
S122	FOUNDATION PLAN EAST
S123	PT LAYOUT WEST
S124	PT LAYOUT EAST
S151	ROOF FRAMING PLAN WEST
S152	ROOF FRAMING PLAN EAST
S501	TYPICAL DETAILS
S502	TYPICAL DETAILS
S503	TYPICAL DETAILS
S521	FOUNDATION DETAILS
S551	ROOF FRAMING DETAILS
S601	SCHEDULES
ARCHITECTURAL	
A101	SITE PLAN
A121	OVERALL FLOOR PLAN & WALL TYPES
A122	FLOOR PLAN
A131	DIMENSION PLAN
A141	REFLECTIVE CEILING PLAN
A151	ROOF PLAN
A201	ELEVATIONS
A211	INTERIOR ELEVATIONS
A212	INTERIOR ELEVATIONS
A301	BUILDING SECTIONS
A302	WALL SECTIONS
A303	WALL SECTIONS
A304	WALL SECTIONS
A411	ENLARGED FLOOR PLANS
A421	DIMENSION ENLARGED FLOOR PLANS
A501	EXTERIOR & DOOR DETAILS
A511	INTERIOR DETAILS
A512	INTERIOR DETAILS
A601	DOOR SCHEDULES 100 thru 110
A602	DOOR SCHEDULES 111 thru 130
A603	SIGNAGE SCHEDULE
A611	ROOM SCHEDULE
A612	FLOOR FINISH PLAN
A701	FURNITURE PLAN
A801	PERSPECTIVE VIEWS
A901	SPACE PROGRAM FLOOR PLANS
INTERIORS	
I101	INTERIOR PAINT PLAN & FINISH SCHEDULE
FIRE PROTECTION	
F001	GENERAL NOTES AND DETAILS - FIRE PROTECTION
F002	SPRINKLER DETAILS - FIRE PROTECTION
F201	FIRST FLOOR PLAN - FIRE PROTECTION
PLUMBING	
P001	LEGENDS, NOTES AND SCHEDULES - PLUMBING
P002	SCHEDULES - PLUMBING
P201	FIRST FLOOR PLAN - PLUMBING
P401	PARTIAL FLOOR PLAN - PLUMBING SANITARY
P402	PARTIAL FLOOR PLAN - PLUMBING DOMESTIC
P501	RISERS - PLUMBING SANITARY
P502	RISERS - PLUMBING DOMESTIC MECHANICAL ROOMS
P601	DETAILS - PLUMBING
MECHANICAL	
M001	SCHEDULE AND LEGEND - HVAC
M002	SCHEDULES - HVAC
M201	FIRST FLOOR PLAN - HVAC DUCTWORK
M301	PARTIAL FLOOR PLANS - HVAC
M401	DETAILS - HVAC
ELECTRICAL	
E001	SCHEDULES, LEGENDS AND GENERAL NOTES - ELECTRICAL
E101	SITE PLAN - ELECTRICAL
E121	ELECTRICAL PLAN
E131	LOW VOLTAGE SYSTEMS PLAN
E141	FIRE ALARM SYSTEM PLAN
E401	PARTIAL ELECTRICAL PLANS
E601	ONE-LINE DIAGRAM - ELECTRICAL
E602	PANEL SCHEDULES - ELECTRICAL
E603	PANEL SCHEDULES - ELECTRICAL

JSRa
JOHNSON SMITTHIPONG & ROSAMOND ASSOCIATES, INC.
5210 E Williams Cir • Ste 600 • Tucson, AZ 85711
(520) 547-7904 • www.jsra.com

Consultants:

ISSUED FOR INTERIM REVIEW
THIS DOCUMENT IS NOT TO BE USED FOR REGULATORY APPROVAL, PERMIT, OR CONSTRUCTION
Vernon Rosamond
Arizona Lic #: 9793
Date: 8/13/24

iHOUSE APARTMENT

Tonalea, AZ 86044

U. S. DEPARTMENT OF HEALTH AND HUMAN SERVICES
INDIAN HEALTH SERVICE
NAVAJO AREA OFFICE

No.	Date	Description

Issue Date:	8/13/24
Project No:	23-390
Scale:	12" = 1'-0"
Drawn By:	KADDOURA
Checked By:	HARGREAVES

PHASE IV (Final CD)

Sheet Title:

INFORMATION SHEET

Sheet Number:

G001

Autodesk Docs://23-390 IHS iHouse Apt v2023/23-390 06 Arch iHouse Apt 2023.rvt
8/13/2024 2:32:55 PM

Applicable Codes and Standards:
2021 IBC -International Building Code
2017 National Electrical Code (NEC)
2021 IMC - International Mechanical Code
2021 IPC - International Plumbing Code
2021 IFC - International Fire Code
2021 IECC - International Energy Conservation Code
2021 NFPA 101
Chapter 30 Apartments
2010 Standards for Architectural Barriers Act

In addition to the above codes, the contractor is responsible for constructing the project so as to comply with all applicable referenced standards, including but not limited to:
NFPA (National Fire Protection Association) Codes:
10 - Standard for Portable Fire Extinguishers
13 – Sprinklers for Commercial Buildings
24 - Installation of Private Fire Service Mains and their Appurtenance
1142 - Standard on water Supplies for Suburban and Rural Fire Fighting
Navajo Tribal Utility Authority (NTUA) Standard Details
Navajo Nation EPA Regulations
Navajo Nation Clean Water Act
Navajo Nation Domestic Wastewater Regulations
Navajo Nation Safe Drinking Water Act
Navajo Nation Primary Drinking Water Regulation

1. Administration :
1. Multi-Family, Transient: IBC applies to the apartment building.
2. All construction is new

II. Definitions:
A. APARTMENT: NFPA Defines any building with three or more dwelling units as an apartment.
B. DWELLING UNIT: A single unit providing complete independent living facilities for one or more persons.
C. HABITABLE SPACE. A space in a building for living, sleeping, eating or cooking. Bathrooms, toilet rooms, closets, halls, storage or utility spaces and similar areas are not considered habitable spaces.

III. Occupancy Class
A. Apartment = IBC, R-2

IV. IBC Area & Construction Type
A. Construction Type VB
B. Area Limit per Sprinklered VB = R-2: 28,000sf
C. 19 Apartment Units = 18,250sf (R-2)

V. Exterior Walls:
A. IBC – Table 602, Type VB construction, No fire resistance requirements when greater than 10'

VI. Light, Ventilation and Heating:
A. IBC 1204.2: Habitable rooms shall have a glazing area not less than 8% of the floor area.

VII. Minimum Room Areas:
A. IBC – 1207 Habitable space (other than kitchen) shall not be less than 7' in any plan dimension.

VIII. Ceiling Height:
A. IBC 1207.2 Habitable spaces and corridors shall have a ceiling height of not less than 7 feet 6 inches above the finish floor. Bathrooms, toilet rooms, kitchens, storage rooms and laundry rooms shall have a ceiling height not less than 7 feet above finished floor. Exception: Sloping Ceilings

IX. Sanitation:
A. IBC – 1209.2.3 Shower and bathtubs with showers shall be finished with a nonabsorbent surface extending to a height of 6 feet above the drain inlet.

X. Glazing:
A. IBC – 2406 Individual glazed area, including glass mirrors, in hazardous locations shall comply with the IBC per table 2406.2
B. Hazardous locations include glazing in doors. Glazing adjacent to doors (lowest edge 24" AFF). Windows with lowest part of glazing less than 18" AFF.

XI. Emergency Escape and Rescue Openings:
A. NFPA 24.2.2.1 – Dwelling Units of 2 or more rooms, every sleeping room shall have one primary means of escape and a secondary means of escape.
1. Secondary Means of escape shall be an outside window or door not less than 5.7sf Clear height -24" Clear width 20". Sill height of not more than 44 inches AFF. Window shall be within 20ft of grade.
B. NFPA 30.2.1.2 – Apartment means of escape shall comply with Section 24.2.
C. IBC - 1030 Basements and every sleeping room shall have at least one operable emergency escape and rescue opening. Minimum Dimensions: Clear opening -5.7 s.f. Clear height -24" Clear width 20". Sill height of not more than 44 inches.

XII. Means of Egress:
1. IBC 1004 Occupant Load factor is 200 gross (2 Bedroom is largest unit at 830sf = 5) All Units only require one means of egress.
2. IBC 1010.1 Means of Egress doors shall be clear width of 32". Measurement shall be from door face to door stop when door is 90 degrees open.
3. IBC 1020.1 Corridors serving more than 10 occupants shall have a 30 minute rating if fully sprinklered.
4. IBC 1020.2 Hallways (Corridors) within the dwelling unit shall not be less than 36" clear.

XIII. Smoke Alarms
A. NFPA 24.3.4.1 & 30.3.4.5, IBC 907.2.10.2 Smoke alarms shall be installed in each sleeping room, outside each sleeping area, and on each additional story.
B. NFPA 24.3.4.2 – Carbon Monoxide alarms or detectors shall be provided with dwelling units that have an attached garage.

XIV. insulation & Foam Plastic IBC 2603:
A. All foam plastic shall have a name spread index of not more than 75 and shall have a smoke-developed Index of not more than 450 when tested by ASTM E 84.
B. Foam plastic shall be separated from the interior of a building by an approved thermal barrier of minimum ½ inch gypsum wallboard or an approved thermal barrier material.
C. IBC 2603.4.1.7 Foam Filled Exterior doors in R2 are not required to have a fire protection rating

XV. Flame Spread and Smoke Density:
A. IBC 803.1.2 (Class C) Wall and ceiling finishes shall have a flame spread classification of not greater than 200 nor a smoke-developed index greater than 460 as tested by ASTME84.

XVI. Dwelling Unit Separation:
A. NFPA 30.3.7.2 – Buildings protected by an approved automatic sprinkler system, each dwelling unit shall be separated by ½ hour fire resistive rating.
B. IBC 420.2 Walls separating Dwelling units shall constructed as fire partitions per 708.
C. IBC 708.3 Walls shall be 1hour unless Type VB construction with automatic sprinkler system shall be not less than ½ hour.

XVII. Moisture decay & Termites: N/A

XVIII. Accessibility:
A. IBC Chapter 11 refers to ICC A117.1. Accessible Units shall comply with the technical section of the 2010 ABA & ICC A117.1

XIX. Energy Efficiency IECC Chapter 4:
A. Climate zone: 5
B. Insulation and fenestration requirements by component (Table C402.4)
1. Fenestration U-factor. 0.30
2. Skylight U-factor: 0.55
3. Glazing SHGC: No Requirement
4. Roof R-Value: R30ci
5. Wood frame wall R-value: 20+3.8ci - or- 13+7.5ci
6. Slab R-value and depth: R20, 2ft
C. The building thermal envelope shall be durably sealed to limit infiltration. The sealing methods between dissimilar materials shall allow for differential expansion and contraction. The following shall be caulked, gasketed, weather-stripped or otherwise sealed with an air barrier material, suitable film or solid material.
1. All joints, seams and penetrations.
2. Site-built windows, doors and skylights.
3. Openings between window and door assemblies and their respective jambs and framing.
4. Utility penetrations.
5. Dropped ceilings or chases adjacent to the thermal envelope.
6. Knee walls.
7. Walls and ceilings separating the garage from conditioned spaces.
8. Behind tubs and showers on exterior walls.
9. Common walls between dwelling units.
10. Other sources of infiltration.
D. Refer to mechanical, plumbing, and electrical drawings for systems compliance.

XX. Additional Requirements:
A. Refer to structural, mechanical, plumbing, and electrical drawings for discipline specific code requirements and compliance.



A1 CODE FLOOR PLAN
1/16" = 1'-0"

LEGEND

48 OCCUPANCY @ EXIT

EGRESS START (OR OPTION)

EGRESS PATH

EGRESS DIRECTION

EGRESS DISTANCE & TRAVEL TIME

1/2 HOUR RATED WALL

Code Legend
1/4" = 1'-0"

JSRa
JOHNSON SMITTHIPONG & ROSAMOND ASSOCIATES, INC.
5210 E Williams Cir • Ste 600 • Tucson, AZ 85711
(520) 547-7904 • www.jsra.com

Consultants:

ISSUED FOR INTERIM REVIEW
THIS DOCUMENT IS NOT TO BE USED FOR REGULATORY APPROVAL, PERMIT, OR CONSTRUCTION
Vernon Rosamond
Arizona Lic #: 9793
Date: 8/13/24

iHOUSE APARTMENT

Tonalea, AZ 86044

U. S. DEPARTMENT OF HEALTH AND HUMAN SERVICES
INDIAN HEALTH SERVICE
NAVAJO AREA OFFICE

No.	Date	Description

Issue Date:	8/13/24
Project No:	23-390
Scale:	As indicated
Drawn By:	KADDOURA
Checked By:	HARGREAVES

PHASE IV (Final CD)

Sheet Title:

CODE SHEET

Sheet Number:

G101

Autodesk Docs://23-390 IHS iHouse Apt \2023\23-390 06 Arch iHouse Apt 2023.rvt
8/13/2024 2:32:56 PM

GENERAL NOTES

1. ALL CONSTRUCTION SHALL CONFORM TO THE LATEST EDITION OF THE MARICOPA ASSOCIATION OF GOVERNMENTS' (MAG) UNIFORM STANDARD SPECIFICATIONS AND DETAILS FOR PUBLIC WORKS CONSTRUCTION (MAG STANDARDS) AND THE NAVAJO TRIBAL UTILITY AUTHORITY (NTUA) TECHNICAL SPECIFICATIONS AND DETAILS UNLESS OTHERWISE NOTED.
2. THE OWNER, UTILITY AGENCY AND JURISDICTION HAVING AUTHORITY, AS APPLICABLE, SHALL BE NOTIFIED 24-HOURS PRIOR TO ANY CONSTRUCTION WORK. ANY WORK CONCEALED WITHOUT INSPECTION SHALL BE SUBJECT TO REMOVAL AND REPLACEMENT AT THE CONTRACTOR'S/DEVELOPER'S EXPENSE.
3. AN APPROVED SET OF PLANS MUST BE AVAILABLE ON THE JOB SITE AT ALL TIMES. THE CONTRACTOR'S REPRESENTATIVE (CAPABLE OF COMMUNICATING WITH TRIBAL REPRESENTATIVES) SHALL BE ON THE JOB AT ALL TIMES THE WORK IS BEING PURSUED.
4. THE CONTRACTOR IS RESPONSIBLE TO PROVIDE EMERGENCY TELEPHONE NUMBERS TO THE NAVAJO TRIBE AND HAVE PERSONNEL AVAILABLE 24-HOURS A DAY TO RESPOND TO EMERGENCIES. IF TRIBAL AGENCIES ARE REQUIRED TO RESPOND AND MAKE EMERGENCY REPAIRS ON BEHALF OF THE CONTRACTOR/DEVELOPER, THE CONTRACTOR/DEVELOPER IS RESPONSIBLE TO REIMBURSE THE TRIBE FOR ALL COSTS INCURRED.
5. IT SHALL BE THE RESPONSIBILITY OF THE PERMITTEE TO ARRANGE FOR THE RELOCATION AND RELOCATION COSTS OF ALL UTILITIES AND SUBMIT A UTILITY RELOCATION SCHEDULE.
6. THE PROCEDURES AND METHODS USED TO SAMPLE, TEST MATERIALS, AND REPORT TEST RESULTS WILL BE APPROVED BY TRIBAL AGENCIES. FOR ALL PHASES OF CONSTRUCTION, THE TYPE, SCHEDULING, FREQUENCY AND LOCATION OF ALL MATERIALS TESTING AND SAMPLING SHALL BY TRIBAL AGENCIES. ALL TEST RESULTS SHALL BE REPORTED DIRECTLY (IN WRITING) TO THE TRIBAL AGENCIES. FOR EACH PHASE OF CONSTRUCTION, TEST RESULTS (IN WRITING) MUST BE RECEIVED FROM THE TESTING LABORATORY, PRIOR TO START OF THE NEXT PHASE OF CONSTRUCTION.
7. THE CONTRACTOR MUST GIVE A LOCATION FOR WASTING EXCESS EXCAVATION MATERIALS AND A LETTER FROM THE OWNER GIVING PERMISSION FOR DUMPING PRIOR TO STARTING ON-SITE CONSTRUCTION.
8. THE LOCATION OF UTILITIES SHOWN IS BASED ON INFORMATION AVAILABLE AT THE TIME OF DESIGN. LOCATIONS SHOWN ARE APPROXIMATE. IT IS THE CONTRACTOR'S SOLE RESPONSIBILITY TO VERIFY THE PRESENCE AND LOCATION OF ALL EXISTING OVERHEAD AND/OR UNDERGROUND UTILITIES THAT MAY INTERFERE WITH THIS CONSTRUCTION, WHETHER OR NOT SAID UTILITIES ARE SHOWN ON THE CONSTRUCTION PLANS FOR THIS PROJECT AND TO ADEQUATELY PROTECT AND MAINTAIN ANY SUCH UTILITIES.
9. THE CONTRACTOR SHALL CONTACT BLUE STAKE (602) 263-1100 PRIOR TO CONSTRUCTION. IT IS THE RESPONSIBILITY OF THE CONTRACTOR TO MAINTAIN CURRENT BLUE STAKE MARKINGS THROUGHOUT CONSTRUCTION.
10. THE CONTRACTOR MAY OBTAIN CONSTRUCTION WATER FROM THE LOAD OUT FACILITY LOCATED IN PEACH SPRINGS. COORDINATE WITH TRIBAL PUBLIC SERVICES ON OPERATIONS AND PAYMENT.
11. CONTRACTOR IS RESPONSIBLE TO CONSTRUCT STABILIZED CONSTRUCTION ENTRANCES IN ORDER TO REDUCE OR ELIMINATE THE TRACKING OF SEDIMENT ONTO PUBLIC RIGHTS-OF-WAYS OR STREETS.
12. ALL DRAINAGE PROTECTIVE DEVICES SUCH AS SWALES, INTERCEPTION DITCHES, PIPES PROTECTIVE BERMS, CONCRETE CHANNELS OR OTHER MEASURES DESIGNED TO PROTECT IMPROVEMENTS, WHETHER EXISTING OR PROPOSED, FROM RUNOFF OR DAMAGE FROM STORM WATER, MUST BE CONSTRUCTED PRIOR TO THE CONSTRUCTION OF ANY IMPROVEMENTS.
13. ANY AND ALL OBSTRUCTIONS WITHIN THE RIGHTS-OF-WAY AND EASEMENTS SHALL BE REMOVED BEFORE ANY CONSTRUCTION IS COMMENCED.
14. ALL CONTRACTORS ARE RESPONSIBLE TO OBTAIN A NATIONAL POLLUTION DISCHARGE ELIMINATION SYSTEM (NPDES) PERMIT IN ACCORDANCE WITH FEDERAL AND STATE REGULATIONS, INCLUDING NOTICE OF INTENT (NOI), NOTICE OF TERMINATION, AND STORM WATER POLLUTION PREVENTION PLAN (SWPPP), IF REQUIRED. A COPY OF THE NOI AND SWPPP SHALL BE AVAILABLE ON THE JOB SITE AT ALL TIMES IF REQUIRED. ALL SWPPP PLANS MUST INCLUDE THE NOI TRACKING NUMBER ADMINISTERED BY ARIZONA DEPARTMENT OF ENVIRONMENTAL QUALITY (ADEQ) ON THE BOTTOM RIGHT HAND CORNER OF THE SHEET, IF REQUIRED.
15. CONTRACTOR IS RESPONSIBLE TO OBTAIN THE NECESSARY 401 AND 404 PERMITS, IF REQUIRED.
16. CONTRACTOR SHALL OBTAIN ANY AND ALL PERMITS AS REQUIRED BY OTHER AGENCIES WHICH HAVE JURISDICTION AT THE CONTRACTOR'S EXPENSE. THE CONTRACTOR SHALL MEET THE REQUIREMENTS OF THESE PERMITS AS SET FORTH THEREIN.
17. THE CONTRACTOR IS SOLELY RESPONSIBLE FOR ALL JOB SITE SAFETY, INCLUDING BUT NOT LIMITED TO MEETING ALL REQUIREMENTS OF OSHA AND ADOSH.
18. CONSTRUCTION WORK HOURS SHALL BE AS 6:00 AM TO 7:00 PM UNLESS OTHERWISE APPROVED BY TRIBAL REPRESENTATIVES.

UTILITY CONSTRUCTION NOTES

1. PROJECT APPROVAL BY THE NAVAJO TRIBE FOR COMPLIANCE WITH TRIBAL REQUIREMENTS SHALL NOT PREVENT THE TRIBAL REPRESENTATIVES FROM REQUIRING CORRECTION OF ERRORS FOUND TO BE IN VIOLATION OF ANY LAW, ORDINANCE, OR REQUIREMENTS FOR UTILITY CONSTRUCTION.
2. PROPER NOTIFICATION MUST BE MADE TO ALL AFFECTED RESIDENTS. THIS INCLUDES NOTIFICATION/INFORMATION SIGNS AND HANGING OF DOOR NOTICES. DOOR NOTICES SHALL BE DISTRIBUTED PRIOR TO BLUE-STAKING AND COMMENCING NON-EMERGENCY WORK.
3. ALL WORK REQUIRING ASPHALT REPLACEMENT, CONCRETE REPLACEMENT OR RESURFACING WILL REQUIRE A FINAL INSPECTION WITH THE UTILITY COMPANY REPRESENTATIVE AT THE TIME OF COMPLETION. TEMPORARY PAVEMENT REPLACEMENT THAT USES COLD-MIX ASPHALT SHALL BE REPLACED NO LATER THAN 7-BUSINESS DAYS AFTER INITIAL PLACEMENT. THIS ALSO INCLUDES PAVEMENT MARKINGS.
4. ALL POTHOLES FOR EXISTING UTILITY CROSSINGS OR SOIL BORINGS FOR FUTURE UTILITIES WILL BE REPAIRED WITH A FULL DEPTH T-TOP PER MAG STANDARD DETAIL 212.
5. ALL TRENCHES IN EXISTING AND FUTURE PAVEMENT OR WITHIN 2 FEET OF BACK OF CURB ARE REQUIRED TO BE BACKFILLED AND WILL REQUIRE ABC COMPACTED TO 95% OR ½ SACK SLURRY CONTROLLED LOW-STRENGTH MATERIAL PER MAG SECTIONS 604 AND 728.
6. ANY DAMAGE TO PUBLIC OR PRIVATE PROPERTY SHALL BE REPORTED TO THE TRIBAL PUBLIC WORKS AND THE PROPERTY OWNER. REPAIR AND/OR REPLACEMENT, IN KIND, SHALL BE COORDINATED WITH THE PROPERTY OWNER AND/OR TRIBAL AUTHORITIES.
7. THE JOBSITE SHALL BE CLEANED OF ANY DEBRIS OR SPOILS RESULTING FROM THIS PROJECT AT THE COMPLETION OF THE PROJECT.
8. THE UTILITY PROVIDER IS RESPONSIBLE FOR OBTAINING A NATION POLLUTION DISCHARGE ELIMINATION SYSTEM (NPDES) PERMIT IN ACCORDANCE WITH FEDERAL AND STATE REGULATIONS, INCLUDING NOTICE OF INTENT (NOI), NOTICE OF TERMINATION (NOT), AND STORM WATER POLLUTION PREVENTION PLAN (SWPPP), AS NECESSARY.

JURISDICTION HAVING AUTHORITY (JHA) GENERAL NOTES

1. THE JHA WILL NOT BE RESPONSIBLE FOR CONSTRUCTION MEANS, METHODS, TECHNIQUES, SEQUENCES, OR PROCEDURES OR FOR SAFETY PRECAUTIONS OR PROGRAMS UTILIZED IN CONNECTION WITH THE WORK. THIS IS THE CONTRACTOR'S SOLE RESPONSIBILITY. THE COR WILL NOT BE RESPONSIBLE FOR THE CONTRACTOR'S FAILURE TO CARRY OUT THE WORK IN ACCORDANCE WITH THE CONTRACT DOCUMENTS.
2. THE CONTRACTOR SHALL PROVIDE ADEQUATE MEANS OF CLEANING TRUCKS AND/OR OTHER EQUIPMENT OF MUD PRIOR TO ENTERING PUBLIC STREETS. IT SHALL ALSO BE THE CONTRACTOR'S RESPONSIBILITY TO CLEAN STREETS, ALLAY DUST, AND TO TAKE WHATEVER MEASURES ARE NECESSARY TO ENSURE THAT ALL ROADWAYS AND ON-SITE PARKING LOTS/FIRE LANES ARE MAINTAINED IN A CLEAN, MUD AND DUST-FREE CONDITION AT ALL TIMES.
3. THE CONTRACTOR IS SPECIFICALLY CAUTIONED THAT THE UNDERGROUND UTILITY LOCATIONS AND/OR ELEVATIONS AS SHOWN ON THESE PLANS ARE BASED ON THE BEST INFORMATION AVAILABLE FROM UTILITY RECORDS AND OTHER DATA AS SUPPLIED TO THE OWNER AND JHA. THE INFORMATION IS NOT TO BE RELIED ON AS BEING EXACT OR COMPLETE. THERE MAY BE OTHER UNDERGROUND UTILITY LINES, SERVICE LINES, AND STRUCTURES PRESENT IN THE SUBJECT AREA. THE CONTRACTOR SHALL VERIFY LOCATIONS AND ELEVATIONS OF EXISTING UTILITIES PRIOR TO CONSTRUCTION. THE CONTRACTOR MUST CALL THE APPROPRIATE UTILITY COMPANIES AT LEAST FORTY-EIGHT (48) HOURS BEFORE ANY EXCAVATION TO REQUEST EXACT FIELD LOCATION OF UTILITIES. IF EXISTING UTILITIES ARE FOUND TO CONFLICT WITH THE PROPOSED IMPROVEMENTS, THE CONTRACTOR SHALL NOTIFY THE COR PRIOR TO PROCEEDING WITH WORK.
4. THE APPROPRIATE TRIBAL REPRESENTATIVES MUST APPROVE, PRIOR TO CONSTRUCTION, ANY ALTERATION OR VARIANCE FROM THESE PLANS. ANY PROPOSED VARIATIONS SHALL BE SHOWN ON CONSTRUCTION FIELD PRINTS AND TRANSMITTED TO THE TRIBE FOR REVIEW.
5. ANY INSPECTION BY THE OWNER OR JHA SHALL NOT IN ANY WAY RELIEVE THE CONTRACTOR FROM ANY OBLIGATION TO PERFORM THE WORK IN STRICT COMPLIANCE WITH THE APPLICABLE CODES AND COMMUNITY REQUIREMENTS.
6. SHOULD THE CONTRACTOR ENCOUNTER AN EXISTING STRUCTURE (ABOVE OR BELOW GROUND) IN THE WORK FOR WHICH DISPOSITION IS NOT INDICATED ON THE PLANS, THE JHA AND TRIBAL REPRESENTATIVE SHALL BE NOTIFIED PRIOR TO DISTURBING SUCH STRUCTURE. THE DISPOSITION OF EXISTING STRUCTURES SO ENCOUNTERED SHALL BE DETERMINED BY THE COR AND TRIBAL REPRESENTATIVE.
7. THE CONTRACTOR IS RESPONSIBLE FOR REMOVING ALL CONSTRUCTION DEBRIS FROM THE SITE AND DISPOSING OF THE DEBRIS IN ACCORDANCE WITH LOCAL, STATE, AND FEDERAL RULES, REGULATIONS, AND LAWS. THE CONTRACTOR IS RESPONSIBLE FOR OBTAINING ALL PERMITS REQUIRED FOR DEMOLITION AND PROPER DISPOSAL.
8. THE CONTRACTOR SHALL NOT TAKE ADVANTAGE OF ANY APPARENT ERROR OR OMISSION ON THE PLANS OR SPECIFICATIONS. IN THE EVENT THE CONTRACTOR DISCOVERS ANY APPARENT ERROR OR DISCREPANCY, HE SHALL IMMEDIATELY CALL UPON TRIBAL REPRESENTATIVES FOR HIS INTERPRETATION AND DECISION, AND SUCH DECISION SHALL BE FINAL.
9. EXISTING SITE IMPROVEMENTS WHICH ARE DAMAGED OR DISPLACED BY THE CONTRACTOR'S OPERATIONS SHALL BE REMOVED AND REPLACED BY THE CONTRACTOR AT NO ADDITIONAL COST TO THE OWNER. THE CONTRACTOR SHALL NOTIFY THE OWNER, WHO SHALL APPROVE REPAIRS PRIOR TO CONSTRUCTION. THE OWNER MAY WITHHOLD FINAL PAYMENT UNTIL REPAIRS ARE INSPECTED AND APPROVED.
10. THE CONTRACTOR SHALL FIELD VERIFY THE ELEVATIONS AND BENCHMARKS PRIOR TO COMMENCING WORK. THE CONTRACTOR SHALL ALSO FIELD VERIFY LOCATION, ELEVATION, AND/OR SIZE OF EXISTING PIPE INVERTS, FLOOR ELEVATIONS, AND CURB OR PAVEMENT AT LOCATIONS WHERE MATCHING INTO EXISTING WORK. THE CONTRACTOR SHALL FIELD VERIFY HORIZONTAL CONTROL BY REFERENCING SHOWN DIMENSIONS OR COORDINATES TO KNOWN PROPERTY LINES AND NOTIFY THE JHA OF DISCREPANCIES IN EITHER VERTICAL OR HORIZONTAL CONTROL PRIOR TO PROCEEDING WITH WORK.
11. PROPERTY CORNERS AND BENCHMARKS SHALL BE CAREFULLY PROTECTED. PROPERTY MONUMENTS DISTURBED BY THE CONTRACTOR'S OPERATIONS SHALL BE REPLACED AT THE CONTRACTOR'S EXPENSE AND AT NO ADDITIONAL COST TO THE OWNER.
12. AT THE COMPLETION OF THE PROJECT, THE CONTRACTOR SHALL PROVIDE REDLINED MARK-UPS OF AS-BUILT CONDITIONS TO THE JHA IN HARD COPY OR ELECTRONIC FORMATS.

STREET CONSTRUCTION NOTES

1. THE DENSITY REQUIRED WHEN TESTED AND DETERMINED BY AASHTO T99 METHOD "C", T167, T138, AND ASTM D2950 SHALL MEET MAG SECTION 601, TABLE 601-2.
2. ALL BACKFILL, PAVEMENT AND SURFACE REPLACEMENT SHALL MEET THE REQUIREMENTS OF MAG STANDARD DETAIL 200-1 AND MAG SECTION 336. ALL TRENCHES SHALL MEET OSHA REQUIREMENTS.
3. ROADWAY EXCAVATION SHALL MEET THE REQUIREMENTS OF MAG STANDARD 205 MAG STANDARD 301 FOR SUBGRADE PREPARATION.
4. CONTRACTOR SHALL REPLACE ANY INADEQUATE SUBGRADE MATERIAL WITH APPROPRIATE BACKFILL AS DIRECTED BY THE COR.
5. AGGREGATE BASE SHALL MEET THE REQUIREMENTS OF MAG SECTION 310 AND SECTION 702, TABLE 702-1.
6. ALL ASPHALT CONCRETE PAVEMENT SHALL MEET THE REQUIREMENTS OF MAG SECTION 321, ASPHALT TO BE GRADE PG-70-10, AND MAX AGGREGATE SIZE SHALL BE 3/4". PRIOR TO THE ASPHALT PAVING BEING PLACED, THE CONTRACTOR SHALL SUBMIT THE MIX DESIGN INCLUDING THE MARSHALL DENSITY THAT WILL BE USED FOR THE PROJECT. AT THE BEGINNING OF THE FIRST DAY'S PAVING, THE CONTRACTOR SHALL SAMPLE THE ASPHALT MIX FROM THE ROADWAY, SUBMIT TO A CERTIFIED MATERIALS LABORATORY FOR DETERMINATION OF THE ASPHALT CONTENT, GRADATION, AND MARSHALL DENSITY. ALL ASSOCIATED COSTS TO BE THE RESPONSIBILITY OF THE CONTRACTOR.
7. CONCRETE CURB AND GUTTER SHALL MEET THE REQUIREMENTS OF MAG STANDARD DETAIL 220 TYPE A AND AS SPECIFIED HEREIN.
8. ALL POURED CONCRETE STRUCTURES SHALL MEET THE REQUIREMENTS OF MAG SECTION 505.
9. STREET SIGNING SHALL BE AS PER MOHAVE COUNTY STANDARD DETAILS 131-1,2. SEPARATE POSTS SHALL BE PROVIDED FOR STREET AND STOP SIGNS.
10. PAVING CONSTRUCTION SHALL NOT START UNTIL ALL UTILITY WORK UNDER THE PROPOSED PAVED AREAS IS COMPLETED.
11. BASE COURSE SHALL NOT BE PLACED UNTIL SUBGRADE HAS BEEN APPROVED BY THE COR.
12. WORK ON THIS PROJECT WILL NOT BE CONSIDERED COMPLETED UNTIL ALL CURBS, SIDEWALKS AND PAVEMENTS HAVE BEEN SWEPT CLEAN OF ALL AND DEBRIS AND ACCEPTED BY THE OWNER.
13. THE LOCATION OF ALL WATER VALVES, FIRE HYDRANTS AND SEWER MANHOLES SHALL BE REFERENCED DURING CONSTRUCTION BY THE CONTRACTOR AT ALL TIMES AND ACCESSIBILITY MADE AVAILABLE TO THE LOCAL FIRE DEPT.
14. ALL UTILITY FACILITIES IN CONFLICT WITH THIS PROJECT SHALL BE RELOCATED AS REQUIRED BY THE CONTRACTOR. ALL ACTIVITY SHALL BE COORDINATED WITH THE UTILITY COMPANIES AND DONE UNDER THEIR SUPERVISION AT NO EXTRA COST TO THE OWNER.
15. EXISTING STREET AND TRAFFIC CONTROL SIGNS SHALL BE MAINTAINED DURING CONSTRUCTION AND BE RELOCATED BY THE CONTRACTOR AS DIRECTED BY THE NAVAJO PUBLIC SERVICES DIRECTOR.

STORMWATER POLLUTION PREVENTION PLAN

1. THE CONTRACTOR IS REQUIRED TO DEVELOP, IMPLEMENT, AND MAINTAIN A STORMWATER POLLUTION PREVENTION PLAN (SWPPP) IN ACCORDANCE WITH THE ENVIRONMENTAL PROTECTION AGENCY (EPA) REGULATIONS AND NAVAJO NATION ENVIRONMENTAL PROTECTION AGENCY (NNEPA), SPECIFICALLY UNDER THE NATIONAL POLLUTANT DISCHARGE ELIMINATION SYSTEM (NPDES) CONSTRUCTION GENERAL PERMIT (CGP) REQUIREMENTS. THE PURPOSE OF THE SWPPP IS TO PREVENT STORMWATER POLLUTION AND MINIMIZE SEDIMENT RUNOFF INTO ADJACENT WATER BODIES AND THE SURROUNDING ENVIRONMENT DURING ALL PHASES OF CONSTRUCTION.
2. REGULATORY COMPLIANCE - THE CONTRACTOR IS RESPONSIBLE FOR ENSURING THAT THE SWPPP COMPLIES WITH ALL FEDERAL, STATE, AND LOCAL REGULATIONS, INCLUDING OBTAINING ANY NECESSARY PERMITS. FAILURE TO COMPLY WITH SWPPP REQUIREMENTS OR REGULATORY OBLIGATIONS MAY RESULT IN LEGAL PENALTIES, INCLUDING FINES, AND IS SUBJECT TO ENFORCEMENT ACTION BY THE EPA OR OTHER REGULATORY AGENCIES.
3. ENGINEER'S REVIEW AND APPROVAL - THE SWPPP MUST BE SUBMITTED TO THE ENGINEER FOR REVIEW AND APPROVAL PRIOR TO THE START OF CONSTRUCTION. NO CONSTRUCTION ACTIVITIES SHALL COMMENCE UNTIL THE SWPPP HAS BEEN APPROVED. THE CONTRACTOR IS RESPONSIBLE FOR ANY REVISIONS OR UPDATES TO THE SWPPP AS CONSTRUCTION PROGRESSES AND SITE CONDITIONS CHANGE.
4. PLAN DEVELOPMENT - THE CONTRACTOR SHALL PREPARE A COMPREHENSIVE SWPPP BEFORE THE COMMENCEMENT OF ANY CONSTRUCTION ACTIVITIES. THE SWPPP MUST INCLUDE, BUT IS NOT LIMITED TO:
   A. SITE DESCRIPTION: INCLUDE A DESCRIPTION OF THE CONSTRUCTION ACTIVITIES, SITE LOCATION, TOPOGRAPHY, SOIL TYPES, AND EXISTING DRAINAGE PATTERNS.
   B. POLLUTION PREVENTION PRACTICES: DETAIL THE BEST MANAGEMENT PRACTICES (BMPS) TO CONTROL SEDIMENT, EROSION, AND POLLUTANTS AT THE SITE. BMPS MUST COVER ALL PHASES OF CONSTRUCTION AND INCLUDE STRUCTURAL, VEGETATIVE, AND PROCEDURAL MEASURES.
   C. SITE MAP: PROVIDE A DETAILED SITE MAP SHOWING LOCATIONS OF ALL STORMWATER CONTROLS, BMPS, STORMWATER OUTFALLS, AND POTENTIAL POLLUTION SOURCES.
   D. INSPECTION AND MAINTENANCE: OUTLINE PROCEDURES FOR REGULAR INSPECTION, MAINTENANCE, AND REPAIR OF BMPS, INCLUDING AFTER RAIN EVENTS.
   E. PERSONNEL TRAINING: DESCRIBE TRAINING PROCEDURES FOR PERSONNEL RESPONSIBLE FOR SWPPP IMPLEMENTATION AND MAINTENANCE.
   F. RECORD KEEPING: MAINTAIN RECORDS OF ALL INSPECTIONS, MAINTENANCE, AND CORRECTIVE ACTIONS TAKEN TO ENSURE COMPLIANCE WITH THE SWPPP.
5. BEST MANAGEMENT PRACTICES (BMPS) - THE CONTRACTOR IS REQUIRED TO IMPLEMENT THE FOLLOWING BMPS AT A MINIMUM:
   A. EROSION CONTROL MEASURES:
      - SILT FENCES, STRAW WATTLES, AND SEDIMENT TRAPS SHOULD BE INSTALLED AROUND THE PERIMETER OF THE CONSTRUCTION SITE AND AT SENSITIVE AREAS.
      - STABILIZE EXPOSED SOIL AREAS WITH TEMPORARY OR PERMANENT VEGETATION, MULCHING, GEOTEXTILES, OR EROSION CONTROL BLANKETS.
   B. SEDIMENT CONTROL MEASURES:
      - USE SEDIMENT BASINS, CHECK DAMS, OR SEDIMENT TRAPS TO CAPTURE RUNOFF AND SETTLE OUT SEDIMENT BEFORE WATER EXITS THE SITE.
      - INSTALL INLET PROTECTION MEASURES ON STORM DRAIN INLETS WITHIN AND ADJACENT TO THE SITE.
   C. RUNOFF MANAGEMENT:
      - DIVERSION CHANNELS, BERMS, AND OTHER STRUCTURES SHOULD BE CONSTRUCTED TO REDIRECT STORMWATER AWAY FROM DISTURBED AREAS.
      - IMPLEMENT TEMPORARY AND PERMANENT SEEDING, PLANTING, OR SODDING TO REDUCE THE VELOCITY OF STORMWATER RUNOFF.
   D. POLLUTION PREVENTION:
      - STORE CHEMICALS, FUELS, AND OTHER HAZARDOUS MATERIALS IN DESIGNATED AREAS WITH SECONDARY CONTAINMENT TO PREVENT SPILLS.
      - ENSURE THAT CONSTRUCTION DEBRIS, WASTE MATERIALS, AND OTHER POLLUTANTS ARE PROPERLY DISPOSED OF AND DO NOT ENTER STORMWATER RUNOFF.
6. COMPLIANCE AND MONITORING
   A. INSPECTIONS: THE CONTRACTOR MUST CONDUCT REGULAR SITE INSPECTIONS AT LEAST ONCE EVERY 7 DAYS AND WITHIN 24 HOURS AFTER A STORM EVENT THAT PRODUCES 0.5 INCHES OR MORE OF RAINFALL. INSPECTIONS MUST FOCUS ON THE EFFECTIVENESS OF THE BMPS AND IDENTIFY ANY DEFICIENCIES OR AREAS WHERE ADDITIONAL MEASURES ARE NECESSARY.
   B. CORRECTIVE ACTIONS: ANY DEFICIENCIES NOTED DURING INSPECTIONS MUST BE ADDRESSED IMMEDIATELY, AND CORRECTIVE ACTIONS MUST BE DOCUMENTED IN THE SWPPP RECORDS.
   C. REPORTING: THE CONTRACTOR SHALL SUBMIT INSPECTION REPORTS, RECORDS OF CORRECTIVE ACTIONS, AND ANY OTHER REQUIRED DOCUMENTATION TO THE ENGINEER FOR REVIEW. NON-COMPLIANCE WITH SWPPP REQUIREMENTS MAY RESULT IN WORK STOPPAGE AND ENFORCEMENT ACTIONS.
8. FINAL PROJECT DOCUMENTATION - UPON COMPLETION OF THE CONSTRUCTION PROJECT, THE CONTRACTOR SHALL SUBMIT A FINAL REPORT DETAILING THE IMPLEMENTATION AND EFFECTIVENESS OF THE SWPPP, INCLUDING A SUMMARY OF INSPECTIONS, MAINTENANCE ACTIVITIES, AND ANY ISSUES ENCOUNTERED. THIS REPORT WILL BE PART OF THE PROJECT'S FINAL DOCUMENTATION.

Contact Arizona 811 at least two full working days before you begin excavation
ARIZONA811
Call 811 or click Arizona811.com

JSRa
JOHNSON SMITTHIPONG & ROSAMOND ASSOCIATES, INC.
5210 E Williams Cir ● Ste 600 ● Tucson, AZ 85711
(520) 547-7904 ● www.jsrarchinc.com

Consultants:

DOWL
WWW.DOWL.COM
4686 East Van Buren Street, Suite 175
Phoenix, Arizona 85008
480-753-0800

iHOUSE APARTMENT PROJECT

INDIAN ROUTE 6290,
TONALEA, AZ 86044

U. S. DEPARTMENT OF HEALTH AND HUMAN SERVICES
INDIAN HEALTH SERVICE
NAVAJO AREA OFFICE

No.	Date	Description

Issue Date:	08/13/2024
Project No:	23-390
Scale:	AS SHOWN
Drawn By:	GSS
Checked By:	SC

PHASE IV (FINAL CD)

Sheet Title:

NOTES SHEET

Sheet Number:

C001

ENGINEER'S UTILITY NOTES

1. SANITARY SEWER SERVICE LATERAL CONSTRUCTION SHALL BE CONSTRUCTED IN ACCORDANCE WITH THE LATEST STANDARDS, SPECIFICATIONS, AND DETAILS OF NTUA STANDARDS.
2. EXISTING UTILITIES ARE SHOWN BASED UPON THE BEST AVAILABLE INFORMATION AVAILABLE. CONTRACTOR TO VERIFY THE LOCATION AND ELEVATION OF EXISTING UTILITIES PRIOR TO COMMENCING CONSTRUCTION.
3. ALL SANITARY SEWER SERVICE LATERAL MATERIAL AND MINIMUM COVER SHALL BE PER NTUA STANDARDS UNLESS OTHERWISE NOTED. ALL SANITARY SEWER LINES SHALL BE SDR-35 PVC IN CONFORMANCE WITH ASTM D3034.
4. NO WATER PIPE SHALL PASS THROUGH OR COME INTO CONTACT WITH ANY PART OF A SEWER MANHOLE. THE MINIMUM HORIZONTAL SEPARATION BETWEEN WATER MAINS AND MANHOLES SHALL BE TEN FEET (10'), MEASURED FROM THE OUTSIDE OF THE WATER MAIN PIPE TO CENTER OF THE MANHOLE.
5. ALL FILL MATERIAL IS TO BE PLACED AND COMPACTED PRIOR TO THE INSTALLATION OF PROPOSED UTILITIES.
6. THE CONTRACTOR SHALL NOTIFY THE UTILITY AUTHORITIES 72 HOURS PRIOR TO CONNECTING TO ANY EXISTING LINE.
7. IN THE EVENT OF A VERTICAL CONFLICT BETWEEN WATER MAINS, SANITARY SEWER, STORM DRAINS, AND GAS LINES (EXISTING AND PROPOSED), THE SANITARY SEWER SHALL BE DUCTILE IRON PIPE WITH MECHANICAL JOINTS AT LEAST 10 FEET ON BOTH SIDES OF CROSSING. THE WATER MAIN SHALL HAVE MECHANICAL JOINTS WITH APPROPRIATE THRUST BLOCKING AS REQUIRED TO PROVIDE A MINIMUM OF 24" CLEARANCE MEETING REQUIREMENTS OF ANSI A21.10 OR ANSI 21.11 (AWWA C-151) (CLASS 50).
8. ALL CONCRETE FOR ENCASEMENTS SHALL BE CLASS A AND HAVE A MINIMUM 28-DAY COMPRESSION STRENGTH A 3,000 PSI.
9. THE FRAME AND GRATE ELEVATIONS OF EXISTING STRUCTURES SUCH AS, BUT NOT LIMITED TO, MANHOLES, VAULTS, AND ELECTRICAL BOXES, SHALL BE ADJUSTED AS NECESSARY TO BE FLUSH WITH PROPOSED PAVEMENT OR FINISHED GRADE ELEVATION.
10. THE CONTRACTOR SHALL INSTALL CONTINUOUS TRACER WIRE FOR NON-METAL PIPE PER NTUA STANDARDS.
11. THE CONTRACTOR SHALL PREPARE TRENCH BEDDING AND PROVIDE BACKFILL IN ACCORDANCE WITH NTUA STANDARDS AND THE GEOTECHNICAL REPORT.
12. ELECTRICAL, COMMUNICATION, AND GAS UTILITY LINES SHOWN ON THE PLANS ARE FOR REFERENCE ONLY. THE CONTRACTOR SHALL COORDINATE LOCATION AND INSTALLATION REQUIREMENTS WITH THE APPROPRIATE ENTITY FOR THESE UTILITY LINES. THE CONTRACTOR SHALL NOTIFY THE ENGINEER OF ANY POTENTIAL CONFLICT THAT MAY ARISE WITH THE INSTALLATION OF THESE UTILITY LINES.
13. "NTUA WATER AND WASTEWATER SPECIFICATIONS" REFERS TO NTUA TECHNICAL SPECIFICATIONS FOR MATERIALS AND WORKMANSHIP FOR WATER AND WASTE WATER FACILITIES (2008).
14. WATER AND WASTEWATER SEPARATION REQUIREMENTS SHALL MEET THE REQUIREMENTS OF NTUA WATER AND WASTEWATER SPECIFICATIONS TP 2.0 "WATER AND WASTEWATER LINE SEPARATION REQUIREMENTS". WHEN THE DUCTILE IRON WASTEWATER LINE IS INSTALLED, IT SHALL BE POLYETHYLENE ENCASED AS REQUIRED BY TP 2.0 AND THE GEOTECHNICAL REPORT.
15. WATER SERVICE AND ALL COMPONENTS SHALL MEET THE REQUIREMENTS OF TP3.07 "WATER SERVICE CONNECTIONS MATERIAL". A SUMMARY BELOW FOR REFERENCE.
    a. WATER SERVICE CONNECTION SHALL BE PE 200 PSI, CONFORMING TO ASTM D2239 EQUAL TO DRISCOPIPE 5100 ULTRA-LINE.
    b. SERVICE LINE FITTINGS SHALL BE NON-FLARE COMPRESSION CONNECTIONS BY MUELLER INSA-TITE H-15426 OR APPROVED EQUAL.
    c. SADDLES SHALL BE DOUBLE STRAPPED, DOUBLE BANDED, THREADS SHALL BE FIP. SADDLES SHALL BE FORD S71 OR MUELLER H-13478.
    d. CURB STOPS SHALL BE BRONZE ALLOY, QUARTER TURN FIPT X FIPT WITH STATIONARY OPERATING ROD. MUELLER B-20287 OR FORD B11-444M.
    e. CURB STOP BOX SHALL BE EXTENSION TYPE, CAST IRON WITH 1-1/2 UPPER SECTION. MUELLER H-10302 OR FORD TYPE PXL. FINISH ELEVATION SHALL BE SLIGHTLY ABOVE GROUND SURFACE. AN 18" X 18" BY 4" DEEP REINFORCED CONCRETE COLLAR SHALL BE POURED AT EACH BOX.
    f. WATER METERS SHALL RECORD FLOW FROM ¼ GPM TO 20 GPM AND SHALL BE ⅝" X ¾" SENSUS SR MODEL WITH FROST PLATE. NOTE SR2 MODEL IS NOT ACCEPTED.
    g. METER YOKE/COPPERSETTER SHALL BE FORD VB 72-12W-11-44 OR AY MCDONALD 20-212WX-DD-44. PRV SHALL BE WATTS SERIES 25AUB OR APPROVED EQUAL.
    h. METER BOX SHALL BE 20 INCH DIAMETER, 30 INCH HIGH NOMETALLIC AND SHALL EXTEND 1-INCH BELOW SERVICE LINE. METER BOX LID SHALL BE CAST IRON DOUBLE LID WITH 11-1/2 INCH OPENING, PLASTIC INNERLID AND LOCKING OUTER LID WITH PENTAGON HEAD WORM TYPE LOCK, EQUAL TO CASTING MODEL M70.
    i. DOMESTIC SHALL BE BRONZE ALLOY, QUARTER TURN CHECK, FIPT X FIPT WITH TEE HEAD, EQUAL TO FORD B11-444 OR AY MCDONALD 610. PROVIDE VALVE BOX PER 3.07.11.
16. CONTRACTOR SHALL SUBMIT ALL MATERIALS TO ENGINEER AND NTUA FOR SUBMITAL APPROVAL PRIOR TO START OF WORK.
17. SERVICE CONNECTIONS SHALL BE MADE USING SADDLE TAP TEES
18. PRESSURE TEST AND DISINFECTION SHALL MEET THE REQUIREMENTS OF TP 3.09 AND 3.10. COORDINATE TESTING AND DISINFECTION WITH NTUA TO ALLOW FOR TEST OBSERVATION.
19. CONTRACTOR SHALL PREPARE A "CONNECTION SCHEDULE" SHOWING THE LOCATIONS AND DATES OF THE PROPOSED CONNECTIONS. ANY PORTIONS OF THE SYSTEM THAT REQUIRE ISOLATION OR THAT WILL RESULT IN INTERRUPTION SHALL BE COORDINATED WITH NTUA. CONTRACTOR SHALL PROVIDE AFFECTED HOUSING RESIDENTS WITH 48 HOUR NOTICE STATING DATE TIME OF INTERRUPTION AND TIME OF RE-ESTABLISHMENT OF SERVICE.

NTUA WATER AND SEWER UTILITY NOTES

1. ALL MATERIALS AND WORKMANSHIP SHALL COMPLY WITH NTUA TECHNICAL SPECIFICATIONS FOR MATERIALS AND WORKMANSHIP FOR WATER AND WASTEWATER FACILITIES, MARCH 2002.
2. CONTRACTOR SHALL OBTAIN APPROVED PERMISSION TO TAP (PTT) FORM PRIOR TO TAPPING EXISTING WATER AND SEWER MAIN.
3. CONTRACTOR SHALL COORDINATE WITH NTUA PRESENT AT THE SITE TO VERIFY LOCATION, DEPTH, SIZE AND TYPE OF UNDERGROUND UTILITIES.
4. CONTRACTOR TO COORDINATE WITH NTUA REGARDING WATER SHUT OFF WITH AT LEAST 3 DAYS ADVANCE NOTICE TO ISOLATE LINE(S), TO NOTIFY AFFECTED CUSTOMERS AND TO MINIMIZE OUTAGE TIME PRIOR TO CONNECTION OF NEW WATER SERVICE.
5. UNLESS OTHERWISE DIRECTED, ONLY AUTHORIZED NTUA STAFF WILL BE ALLOWED TO CLOSE/OPEN WATER VALVES FOR ANY CONNECTIONS TO EXISTING LINES AND FOR THE USAGE OF WATER.
6. ROUGH GRADING SHALL BE COMPLETED WITHIN 1/10 OF A FOOT OF PLAN GRADE PRIOR TO INSTALLING WATER AND WASTEWATER UTILITIES.
7. COORDINATE WITH LOCAL UTILITY PROVIDERS FOR ANY REMOVAL OF EXISTING FACILITIES PRIOR TO CONSTRUCTION.
8. CONTRACTOR SHALL PROTECT EXISTING UTILITIES IN PLACE. CONTRACTOR SHALL RESTORE AT OWN EXPENSE ANY DAMAGE TO EXISTING UTILITIES.

NTUA WATER AND SEWER UTILITY NOTES (CONT.)

9. ALL WATER MAINS SHALL BE POLYVINYL CHLORIDE (PVC) PRESSURE PIPE WITH A MINIMUM OF 200 PSI PRESSURE CLASS UNLESS SPECIFIED OTHERWISE.
10. A WARNING/DETECTABLE MARKING TAPE SHALL BE INSTALLED AT 12" MINIMUM AND 18" MAXIMUM ABOVE THE WATER AND SEWER PIPE. MARKING TAPE SHALL CONSIST OF ONE LAYER OF ALUMINUM FOIL LAMINATED BETWEEN TWO COLORED LAYERS OF INERT PLASTIC FILM. THE LAMINATION BOND SHOULD BE STRONG ENOUGH THAT THE LAYERS CANNOT BE SEPARATED BY HAND. TAPE SHALL BE A MINIMUM OF 5 MILS THICK AND 6 INCHES WIDE. TAPE SHALL BEAR A CONTINUOUS, PRINTED MESSAGE EVERY 16 TO 36 INCHES WARNING OF THE INSTALLATION BURIED BELOW. TAPE SHALL BE TERRA TAPE, LINETEC, OR AS APPROVED BY NTUA.
11. DEFLECTION (VERTICAL OR HORIZONTAL) OF PIPES IS PERMITTED AND SHALL CONFORM TO AMERICAN WATER WORKS ASSOCIATION (AWWA) JOINT DEFLECTION FOR AWWA PRESSURE PIPE AND AT 80% OF MANUFACTURER'S RECOMMENDED MAXIMUM DEFLECTION, WHICHEVER IS MORE STRINGENT. A COPY OF THE MANUFACTURER'S RECOMMENDATION SHALL BE SUBMITTED TO NTUA.
12. PIPES SHALL NOT BE BACKFILLED (INCLUDING BEDDING MATERIAL ABOVE THE SPRING LINE OF THE PIPE) UNTIL THE CONSTRUCTION HAS BEEN INSPECTED AND APPROVED FOR BACKFILLING BY A NTUA REPRESENTATIVE.
13. CONTRACTOR IS TO PURCHASE AMI WATER METER(S) WITH MODULE(S) AT LOCAL NTUA DISTRICT OFFICE.
14. CONTRACTOR SHALL PROVIDE AS-BUILT DRAWINGS OF ALL UTILITIES TO OWNER AND NTUA IN HARD COPY AND DIGITAL FORMAT.
15. HYDROSTATIC TESTING, FLUSHING AND CHLORINATION (SHALL BE CONDUCTED IN ACCORDANCE WITH NTUA TECHNICAL SPECIFICATIONS FOR MATERIALS AND WORKMANSHIP FOR WATER AND WASTEWATER FACILITIES, MARCH 2002) SHALL BE COORDINATED WITH NTUA AT LEAST 3 DAYS IN ADVANCE. NTUA REPRESENTATIVE SHALL BE PRESENT TO RECORD THE INFORMATION AND CERTIFY THE TESTING.
16. UTILITY CONSTRUCTION ACCEPTANCE AND UTILITY TRANSFER: CONTRACTOR SHALL SCHEDULE A FINAL OR PRE-FINAL INSPECTION WITH NTUA HEADQUARTERS ENGINEERING AND LOCAL DISTRICT OFFICE, OWNER AND GENERAL CONTRACTOR AT THE END OF CONSTRUCTION. DOCUMENTS SHALL BE PROVIDED BY THE CONTRACTOR AS FOLLOWS: AS-BUILT DRAWING, APPROVED PTT, HYDROSTATIC TESTING RESULTS, BACTERIOLOGICAL TESTING RESULTS, MATERIALS SUBMITTALS AND COST OF PLANT. PLEASE FOLLOW THE NTUA TECHNICAL SPECIFICATIONS FOR MATERIALS AND WORKMANSHIP FOR WATER AND WASTEWATER FACILITIES, MARCH 2002, SECTION TP 5.0.
17. THE CONTRACTOR/ENGINEER SHALL PROVIDE WARRANTY ON ALL NEW WATER AND WASTEWATER FACILITIES AGAINST DEFECTS IN MATERIALS, WORKMANSHIP AND FOR ANY DESIGN DEFICIENCIES, ERRORS AND OMISSIONS FOR THE PERIOD OF ONE YEAR WHEN THE FACILITIES WERE INSPECTED, ACCEPTED AND APPROVED.
18. CONTRACTOR SHALL PROVIDE 48 HOUR NOTICE TO RESIDENTS, ENGINEER, AND NTUA FOR ALL SERVICE INTERRUPTIONS.

NTUA GENERAL NOTES FOR WATER SERVICE

1. PROVIDE 10' MINIMUM HORIZONTAL SEPARATION IN SEPARATE TRENCHES BETWEEN WATER AND SEWER SERVICES, PAST THE BUILDING PLUMBING. PROVIDE 5' MINIMUM HORIZONTAL SEPARATION BETWEEN WATER SERVICE AND OTHER UTILITIES. FOR WATER AND SEWER CROSSING. PROVIDE A MINIMUM OF 12" VERTICAL CLEARANCE, PIPE O.D. TO PIPE O.D. IF WATER SERVICE CROSSES OTHER UTILITIES, ALL STIPULATIONS FOR THE OTHER UTILITY MUST BE MET.
2. BUILDING PLUMBING, WATER AND SEWER SERVICES TO BE INSTALLED IN ACCORDANCE WITH THE NATIONAL PLUMBING CODE ADOPTED BY THE NAVAJO NATION.
3. WATER SERVICES SHALL HAVE A MINIMUM COVER OF 36" AND SHALL BE INSTALLED IN CONFORMANCE WITH NTUA STANDARDS.
4. SADDLES SHALL BE SINGLE STRAP/BAND TYPE, FOR STEEL PIPE O.D. PVC. SADDLES SHALL BE DOUBLE STRAP/BAND TYPE, FOR D.I., A.C., OR C-900 PIPE. ON EXISTING 2" PIPING, A 2" X 1" PVC TEE SHALL BE USED. CONTACT NTUA HEADQUARTERS ENGINEERING ON PIPING SMALLER THAN 2".
5. PROVIDE THE AS-BUILT SWING TIE INFORMATION FOR THE TAP POINT AND OTHER APPURTENANCES INSTALLED.
6. THE WATER METER SHALL BE CENTERED AND SET A MAX. OF 24" BELOW THE TOP OF THE METER BOX COVER.
7. THE METER CAN SHALL BE LOCATED JUST BEYOND THE SIDEWALK AT THE PROPERTY LINE OR WITH OWNER'S PERMISSION A MINIMUM OF 10' FROM THE BUILDING.
8. WATER SERVICE LINES ARE LIMITED TO A MAXIMUM OF 200'. IF THE PRESSURE AT THE HOME SITE IS ABOVE 70 PSI, INSTALL THE APPROPRIATE TANDEM COPPERSETTER WITH AN INDIVIDUAL PRV (ITEM 8A).
9. USE FIELD MARKERS WHERE APPROPRIATE.
10. SUBMIT CONSTRUCTION COST OF NEW INSTALLATION UP TO AND INCLUDING THE METER. INDICATE AS FOLLOWS:
    A. MATERIAL COST,
    B. LABOR COST,
    C. EQUIPMENT COST,
    D. TOTAL CONSTRUCTION COST

NTUA GENERAL NOTES SEWER SERVICE

1. PROVIDE 10' MINIMUM HORIZONTAL SEPARATION IN SEPARATE TRENCHES BETWEEN THE WATER AND SEWER SERVICES. PROVIDE 5' MINIMUM HORIZONTAL SEPARATION BETWEEN THE SEWER SERVICE AND OTHER UTILITIES. IF SEWER SERVICE CROSSES OTHER SERVICES, SEE NTUA CROSSING POLICY OR CONTACT NTUA HEADQUARTERS ENGINEERING.
2. SEWER CLEANOUTS ARE REQUIRED ON ALL BENDS IN EXCESS OF 45° AS PER PLUMBING CODE ADOPTED BY THE NAVAJO NATION. MODIFY MATERIAL LIST ACCORDINGLY AFTER CONSULTING WITH NTUA HEADQUARTERS ENGINEERING.
3. ADDITIONAL SEWER CLEANOUTS ARE REQUIRED ON SEWER SERVICES LONGER THAN 50' AS PER UNIFORM PLUMBING CODE ADOPTED BY THE NAVAJO NATION. MODIFY MATERIAL LIST ACCORDINGLY AFTER CONSULTING WITH NTUA HEADQUARTERS ENGINEERING. EACH ADDITIONAL CLEANOUT IS AT THE CUSTOMERS EXPENSE INSTALL AT LEAST ONE CLEANOUT AS REQUIRED BY NOTE 2. IF CUSTOMER REQUEST FEWER AND REALIZES THIS VIOLATES NAVAJO TRIBAL CODE, THEN INSTALL PER THE CUSTOMER'S REQUEST AND SO NOTE ON THE INDIVIDUAL AS-BUILT, NTUA RECOMMENDS THAT CLEANOUTS BE SPACED NO MORE THAN 100'.
4. PROVIDE PROPOSED ELEVATION AT WALL. PROVIDE 6 IN. DIAMETER SLEEVE IF PIPING PENETRATES WALL OR 4 IN. DEPTH OF SAND BETWEEN FOOTING AND TOP OF PIPING IS BELOW THE FOOTING. ORDER ASTM D-1785 SCH. 40 PIPE WITH LENGTH AS NEEDED FOR THE SLEEVE. CONTACT N.T.U.A. HEADQUARTERS ENGINEERING ON PIPING SMALLER THAN 2 IN. IN SIZE.
5. STATE THE EXISTING PIPE TYPE AND O.D. (E.G. ASTM D-3034, SDR 35, PVC, 8. 40"). SADDLE IS TO HAVE A GASKET SEAL OR 0-RING AND NON-CORRODIBLE STRAP SECURING SYSTEM.
6. MINIMUM SLOPE OF 1/4 INCH PER FOOT (2%) OR CONTACT N.T.U.A. HEADQUARTERS ENGINEERING.
7. BACKFILL IS TO BE HAND TAMPED (NO-MECHANICAL) AND COMPACTED IN 6 INCH LAYERS FOR AT LEAST 12 IN. ABOVE PVC PIPE. INSTALL PER ASTM D-2321 AND UNIFORM PLUMBING CODE ADOPTED BY THE NAVAJO NATION.
8. PROVIDE THE AS-BUILT AND SWING TIES FOR THE TAP POINT.

NTUA GENERAL NOTES SEWER SERVICE (CONT.)

9. THE MATERIAL LIST SHALL BE MODIFIED IF A FIELD MARKER OF THE TAP POINT IS TO BE INSTALLED. UNDER THE AS-BUILT TIE INFORMATION. PROVIDE THE SURFACE DESCRIPTION OF THE TAP POINT (E.G. OPEN FIELD, PAVED ROAD, ETC).
10. ORDER CONCRETE AS NEEDED. THE CONCRETE MAY BE ELIMINATED IF N.T.U.A. DISTRICT WATER FOREMAN AND ENGINEER DETERMINE FIELD CONDITIONS DO NOT REQUIRE THIS FOR ADEQUATE COMPACTION AND 4 IN. PIPE STRUCTURAL SUPPORT. MARK THE AS-BUILT DRAWING TO SHOW WHEN THE CONCRETE IS NOT USED.
11. FOR MULTIPLE BENDS, A CLEANOUT IS REQUIRED UPSTREAM FROM THE FIRST BEND THAT CAUSED THE CUMULATIVE ANGLE TO EXCEED 45'.

Contact Arizona 811 at least two full working days before you begin excavation
ARIZONA811
Call 811 or click Arizona811.com

JSRa
JOHNSON SMITTHIPONG & ROSAMOND ASSOCIATES, INC.
5210 E Williams Cir ● Ste 600 ● Tucson, AZ 85711
(520) 547-7904 ● www.jsrarchinc.com

Consultants:

DOWL
WWW.DOWL.COM
4686 East Van Buren Street, Suite 175
Phoenix, Arizona 85008
480-753-0800

iHOUSE APARTMENT PROJECT

INDIAN ROUTE 6290,
TONALEA, AZ 86044

U. S. DEPARTMENT OF HEALTH AND HUMAN SERVICES
INDIAN HEALTH SERVICE
NAVAJO AREA OFFICE

No.	Date	Description

Issue Date:	08/13/2024
Project No:	23-390
Scale:	AS SHOWN
Drawn By:	GSS
Checked By:	SC

PHASE IV (FINAL CD)

Sheet Title:

UTILITY NOTES SHEET

Sheet Number:

C002

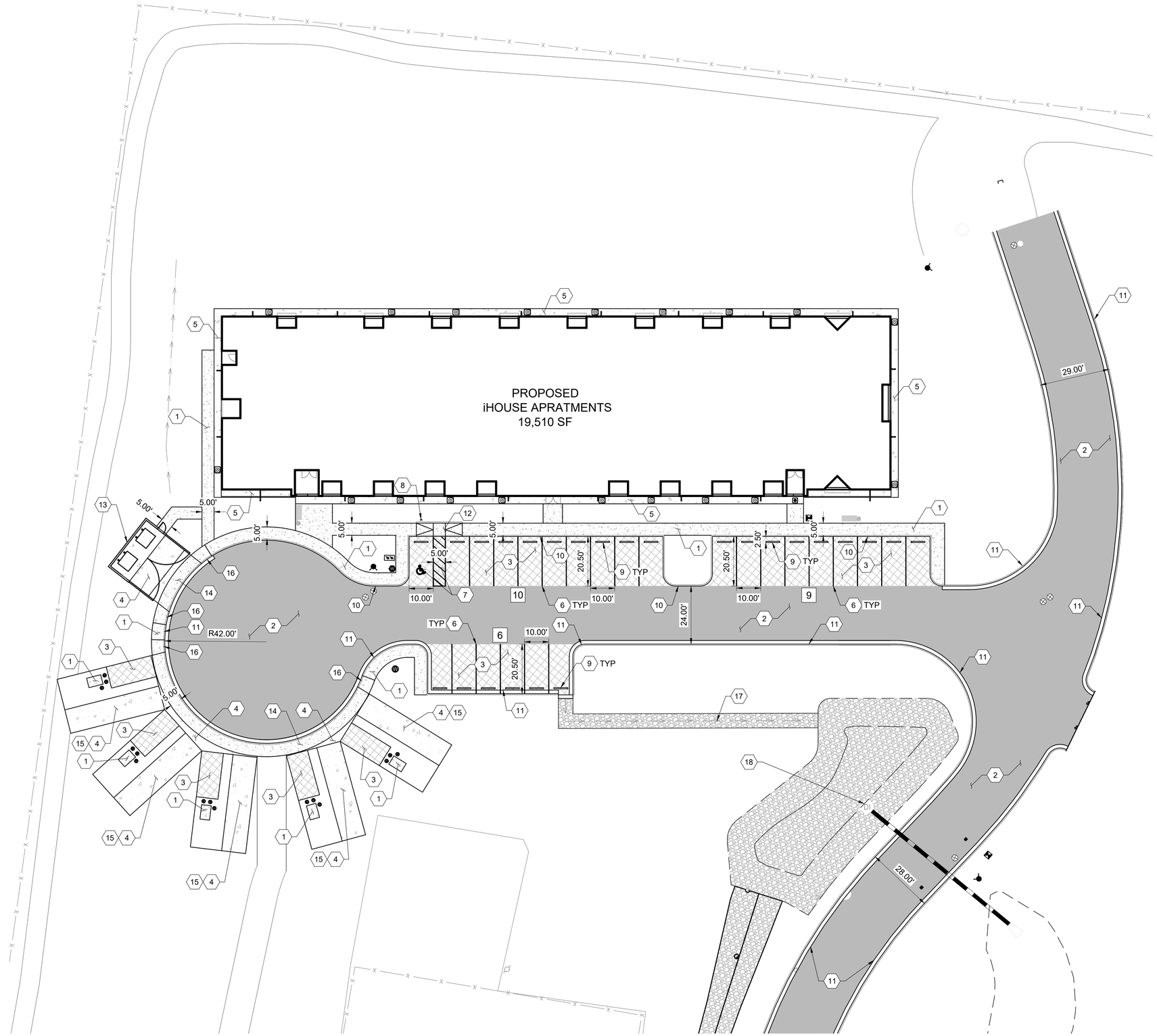

SITE PLAN KEKYNOTES

1. 4" DEPTH CONCRETE SIDEWALK PER MAG STD DTL 230.
2. HEAVY DUTY ASPHALT CONCRETE PAVEMENT SECTION.
3. LIGHT DUTY ASPHALT CONCRETE PAVEMENT SECTION. 3" AC OVER 6" ABC. SEE DTL 16, SHEET C503.
4. HEAVY DUTY CONCRETE PAVEMENT SECTION. 6" PCC OVER 4" ABC. SEE DTL 16, SHEET C503.
5. CONCRETE APRON. REFERENCE ARCHITECTURAL PLANS.
6. 4" WIDE PARKING SPACE STRIPING, WHITE TWO COATS.
7. ACCESSIBLE PARKING STALL AND AISLE MARKING. SEE DTL 22, SHEET C503.
8. ACCESSIBLE PARKING SPACE SIGN. SEE DTL 23, SHEET C503.
9. PRECAST SAFETY CURB, PER MAG STD DTL 150.
10. CONCRETE VERTICAL CURB TYPE 'A', PER MAG STD DTL 222.
11. CONCRETE VERTICAL CURB AND GUTTER TYPE 'A', PER MAG STD 220-1.
12. PARALLEL CURB RAMP, PER MAG STD DTL 238-3.
13. TRASH ENCLOSURE AND PAVEMENT PER CITY OF PHOENIX CODE CHAPTER 27 "SOLID WASTE".
14. RETROFIT DRIVEWAY WITH 2" ROLL CURB AND GUTTER. PER MAG STD DTL 260.
15. RV PARKING LAYOUT. SEE DTL 25, SHEET C504.
16. CURB AND GUTTER TRANSITION, PER MAG STD DTL 221.
17. RIPRAP SWALE. SEE DTL 19, SHEET C503.
18. GRAVEL CONE WITH RISER. SEE DTL 27, C504.

X STANDARD PARKING SPACE COUNT.

JSRa
JOHNSON SMITTHIPONG & ROSAMOND ASSOCIATES, INC.
5210 E Williams Cir • Ste 600 • Tucson, AZ 85711
(520) 547-7904 • www.jsrarchinc.com

Consultants:

DOWL
WWW.DOWL.COM
4686 East Van Buren Street, Suite 175
Phoenix, Arizona 85008
480-753-0800

iHOUSE APARTMENT PROJECT

INDIAN ROUTE 6290,
TONALEA, AZ 86044

U. S. DEPARTMENT OF HEALTH AND HUMAN SERVICES
INDIAN HEALTH SERVICE
NAVAJO AREA OFFICE

No.	Date	Description

Issue Date:	08/13/2024
Project No:	23-390
Scale:	AS SHOWN
Drawn By:	GSS
Checked By:	SC

PHASE IV (FINAL CD)

Sheet Title:

SITE PLAN

Sheet Number:

C101

Contact Arizona 811 at least two full working days before you begin excavation
ARIZONA811
Call 811 or click Arizona811.com

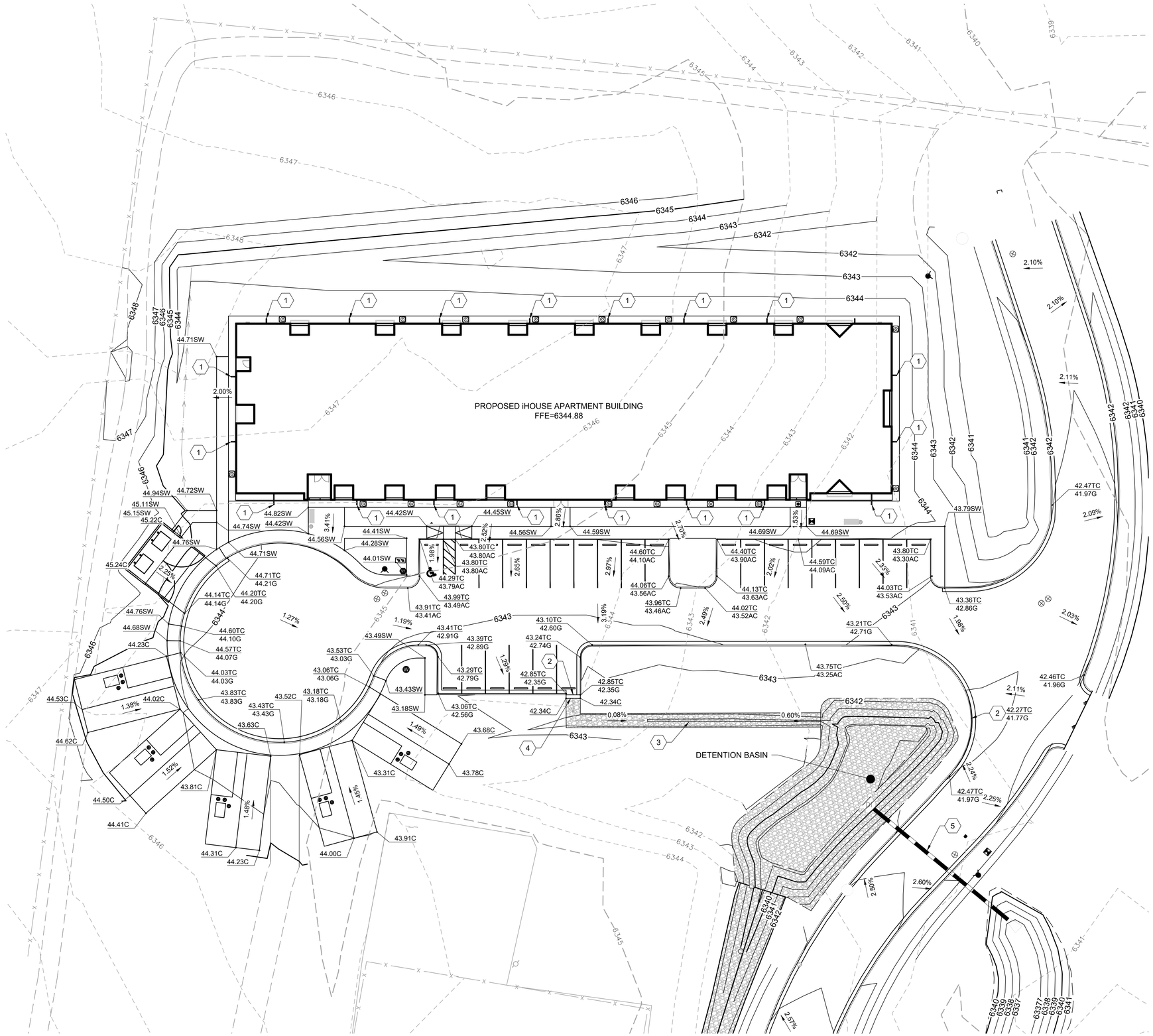

DRAINAGE KEKYNOTES

1. DOWN SPOUT. REFERENCE ARCHITECTURE PLANS.
2. CURB OPENING, SEE DTL 21 SHEET C503.
3. RIPRAP SWALE, SEE DTL 19 SHEET C503.
4. TOE DOWN. SEE DTL 18 SHEET C503.
5. PVC CULVERT.

JSRa
JOHNSON SMITTHIPONG & ROSAMOND ASSOCIATES, INC.
5210 E Williams Cir ● Ste 600 ● Tucson, AZ 85711
(520) 547-7904 ● www.jsrarchinc.com

Consultants:

DOWL
WWW.DOWL.COM
4686 East Van Buren Street, Suite 175
Phoenix, Arizona 85008
480-753-0800

iHOUSE APARTMENT PROJECT

INDIAN ROUTE 6290,
TONALEA, AZ 86044

U. S. DEPARTMENT OF HEALTH AND HUMAN SERVICES
INDIAN HEALTH SERVICE
NAVAJO AREA OFFICE

No.	Date	Description

Issue Date:	08/13/2024
Project No:	23-390
Scale:	AS SHOWN
Drawn By:	GSS
Checked By:	SC

PHASE IV (FINAL CD)

Sheet Title:

GRADING PLAN

Sheet Number:

C201

Contact Arizona 811 at least two full working days before you begin excavation
ARIZONA811
Call 811 or click Arizona811.com

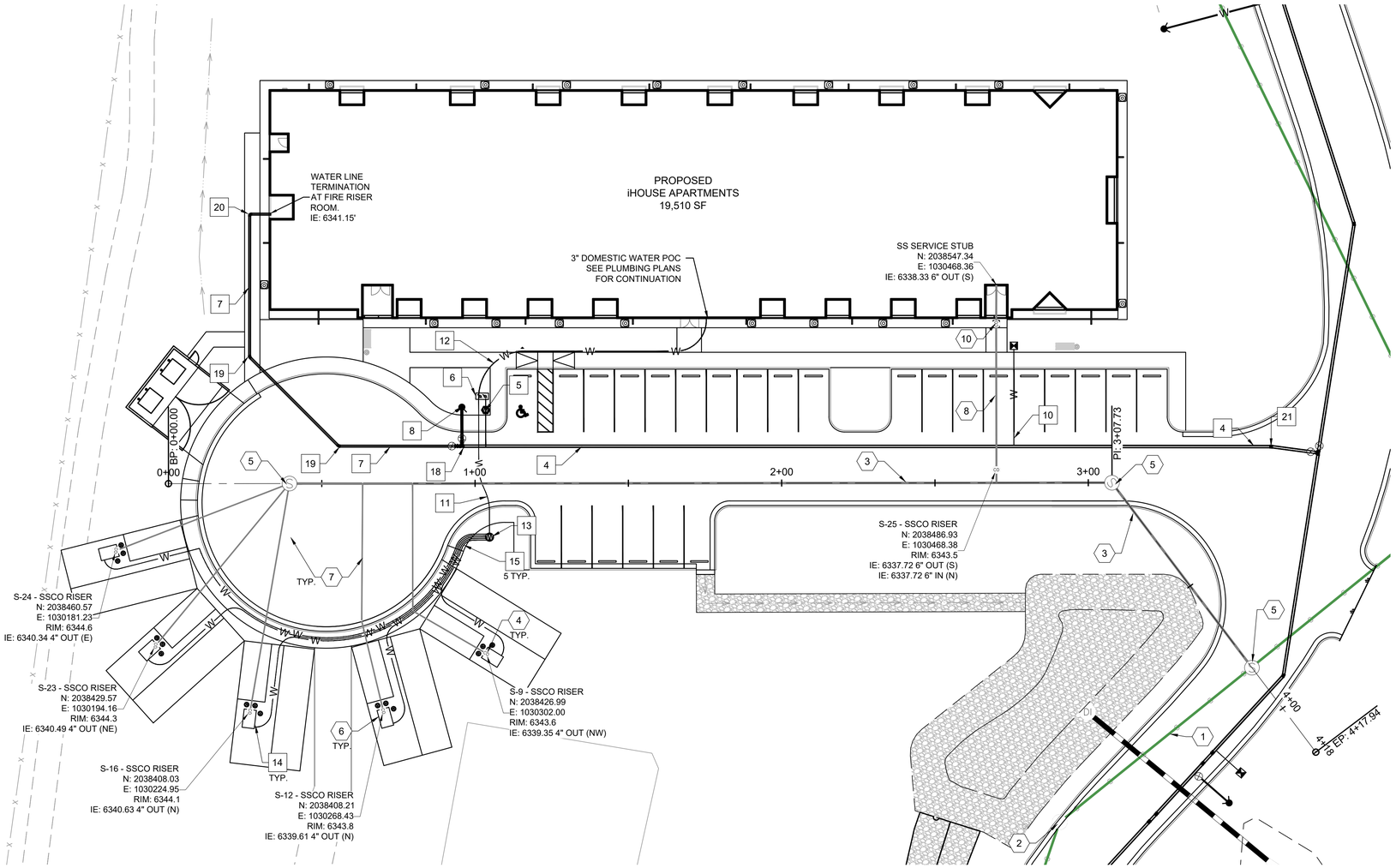

WATER KEYNOTES

1. EXISTING FIELD HYDRANT.
2. EXISTING WATER METER.
3. EXISTING WATER VALVE.
4. 8" WATER MAIN.
5. 3" DOMESTIC SERVICE LINE WITH METER. SEE DETAIL 5, SHEET C500.
6. 3" DOMESTIC WATER BACKFLOW PREVENTER PER MAG STD DTL 611-1.
7. 6" WATER MAIN.
8. FIRE HYDRANT ASSEMBLY. SEE DETAIL 10, SHEET C501.
9. 8" WATER MAIN WITH GATE VALVE. SEE DETAIL 7, SHEET C501.
10. AIR RELEASE VALVE ASSEMBLY. SEE DETAIL 14, SHEET C502.
11. 2" HDPE CTS DR 9 DOMESTIC SERVICE LINE.
12. 3" PVC DOMESTIC SERVICE LINE.
13. 2" SERVICE LINE CONNECTION BOX. SEE DETAIL 26 ON SHEET 504.
14. RV FIELD HYDRANT WATER CONNECTION.
15. 1" WATER SERVICE LINE
16. 6" SIZE-ON-SIZE TAPPING SLEEVE
17. 6" x 8" REDUCER
18. 8" FLxFL TEE W/ 8"X6" FLXFL REDUCER BOLTED TO 6" FLxMJ GV (W), 6" FLxMJ GV (N) & 8" FCA (E).
19. 6" - 45 DEG ELBOW W/TB.
20. 6" - 90 DEG ELBOW W/TB.
21. 8" - 11.25 DEG ELBOW W/TB.

SANITARY SEWER KEYNOTES

1. EXISTING 8" SANITARY SEWER LINE.
2. EXISTING SANITARY SEWER MANHOLE.
3. 6" SANITARY SEWER LINE. SEE DETAIL 1, C500.
4. 4" SANITARY SEWER CLEANOUT. SEE DETAIL 13, SHEET C502
5. SANITARY SEWER MANHOLE. SEE DETAIL 8, SHEET C501
6. RV SEWER CONNECTION
7. 4" SRD35 SERVICE LATERAL @ 2% SLOPE
8. 6" SDR SERVICE LATERAL @ 1% SLOPE
9. 4" SANITARY SEWER CLEANOUT. SEE DETAIL 13, SHEET C502
10. DOUBLE SANITARY CLEANOUT. SEE DETAIL 10, SHEET C501

SS CENTERLINE - STA 0+00 TO STA 4+17.94

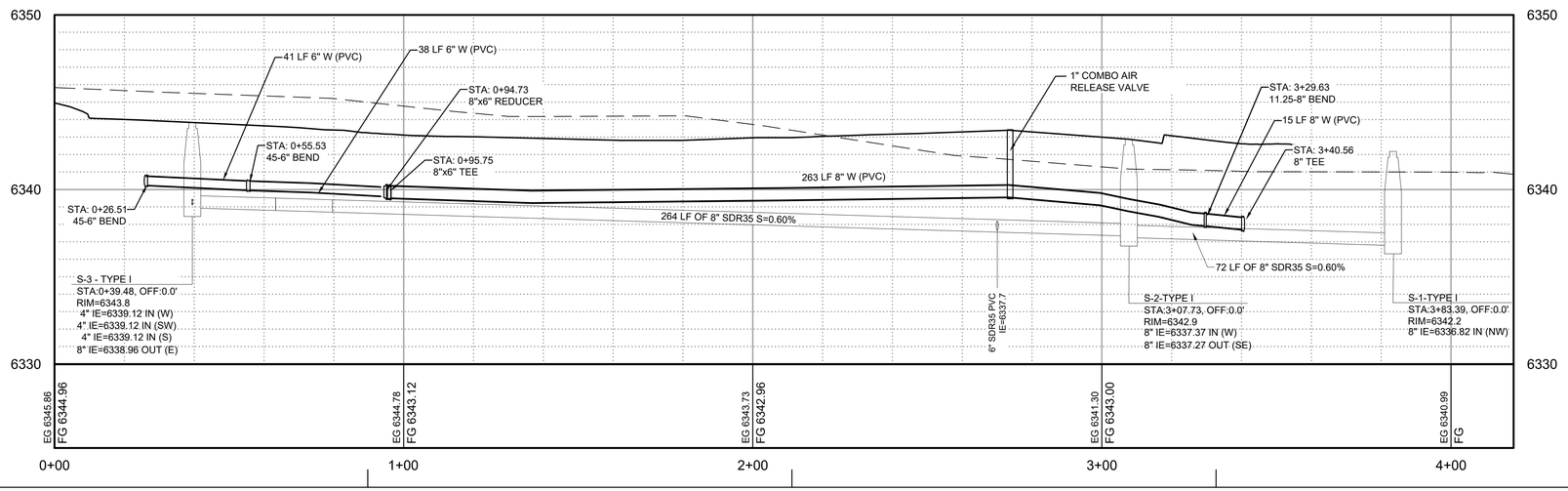

JSRa
JOHNSON SMITTHIPONG & ROSAMOND ASSOCIATES, INC.
5210 E Williams Cir • Ste 600 • Tucson, AZ 85711
(520) 547-7904 • www.jsrarchinc.com

Consultants:

DOWL
WWW.DOWL.COM
4686 East Van Buren Street, Suite 175
Phoenix, Arizona 85008
480-753-0800

iHOUSE APARTMENT PROJECT

INDIAN ROUTE 6290,
TONALEA, AZ 86044

U. S. DEPARTMENT OF HEALTH AND HUMAN SERVICES
INDIAN HEALTH SERVICE
NAVAJO AREA OFFICE

No.	Date	Description

Issue Date:	08/13/2024
Project No:	23-390
Scale:	AS SHOWN
Drawn By:	GSS
Checked By:	SC

PHASE IV (FINAL CD)

Sheet Title:

UTILITY PLAN AND PROFILE

Sheet Number:

C301

Contact Arizona 811 at least two full working days before you begin excavation
ARIZONA811
Call 811 or click Arizona811.com

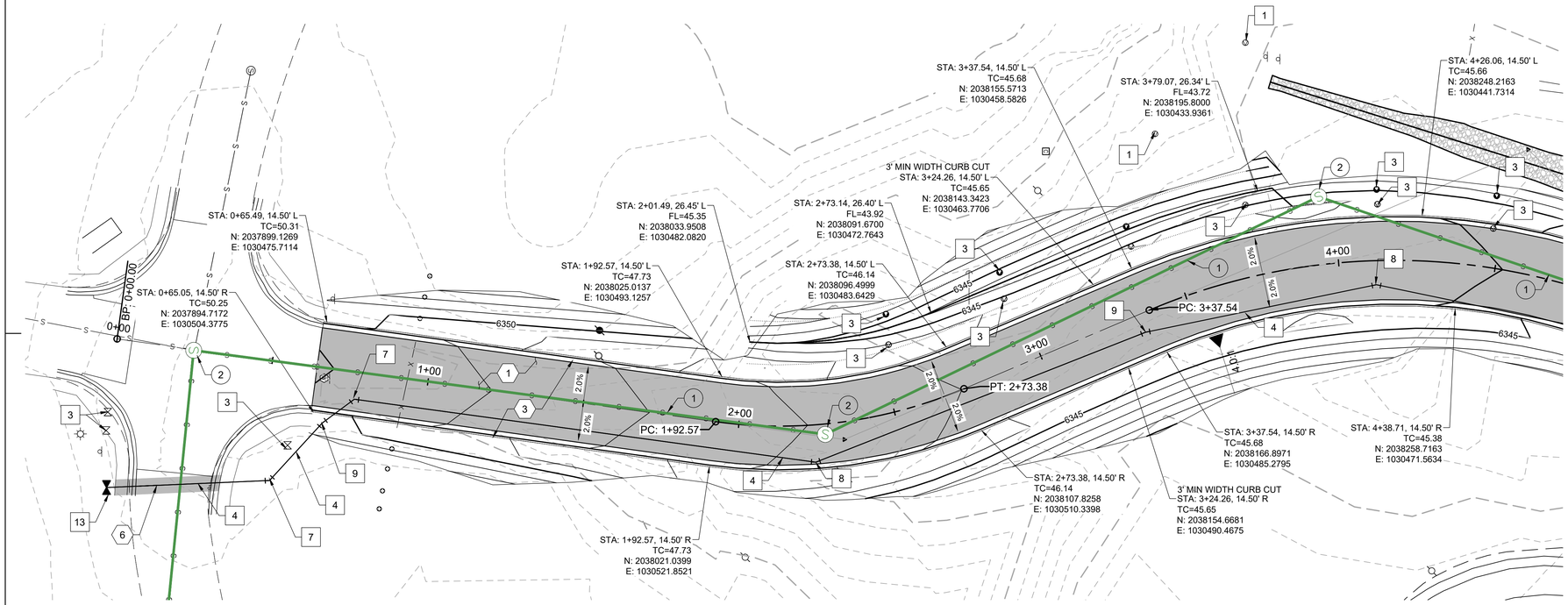

NEW ROAD - STA 0+00 TO STA 4+50

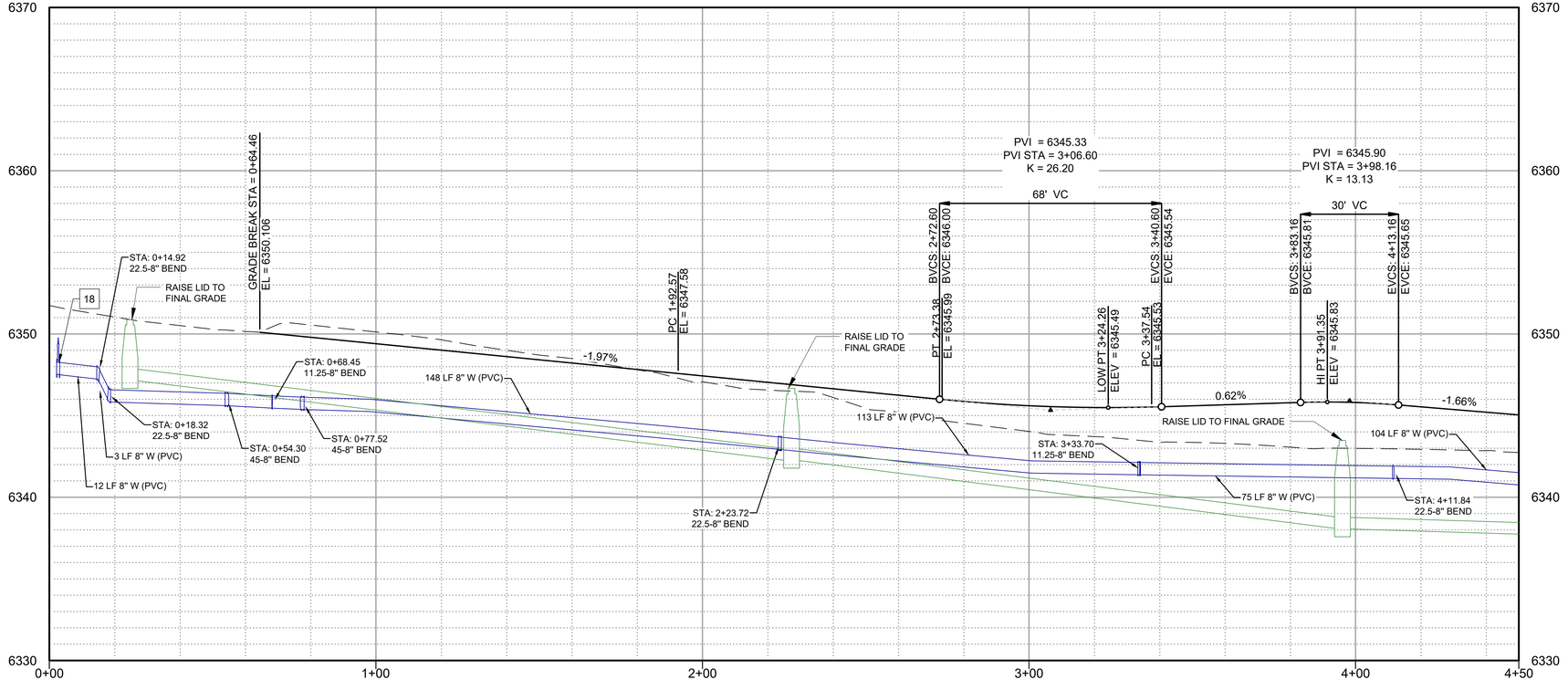

SITE PLAN KEYNOTES

1. ASPHALT CONCRETE PAVEMENT SECTION. 3" AC OVER 6" ABC. SEE DTL 16, SHEET C503.
2. CONCRETE VERTICAL CURB TYPE 'A', PER MAG STD DTL 222.
3. CONCRETE VERTICAL CURB AND GUTTER TYPE 'A', PER MAG STD 220-1.
4. GRAVEL CONE WITH RISER. SEE DTL 27, C504.
5. 18" FLARED END SECTION.
6. CUT EXISTING ASPHALT AND REPLACE WITH NEW PAVEMENT SECTION. SEE DTL 16, SHEET C503

WATER KEYNOTES

1. EXISTING FIELD HYDRANT.
2. EXISTING WATER METER.
3. EXISTING IRRIGATION VALVE.
4. 8" WATER MAIN.
5. CONNECTION TO EXISTING STUB.
6. 8" WATER MAIN.
7. 8" - 45 DEG ELBOW W/TB.
8. 8" - 22.5 DEG ELBOW W/TB.
9. 8" - 11.25 DEG ELBOW W/TB.
10. FIRE HYDRANT ASSEMBLY. SEE DETAIL 11.A, SHEET C501.
11. 8" WATER MAIN WITH GATE VALVE. SEE DETAIL 7, SHEET C501.
12. AIR RELEASE VALVE ASSEMBLY. SEE DETAIL 14, SHEET C502.
13. 6" HOT TAP BOLTED TO 6"X8" EXPANDER. SEE DETAIL 15-B, SHEET 502.
14. FLUSH ASSEMBLY. SEE DETAIL 15, SHEET 502.
15. 6" SIZE-ON-SIZE FLG TAPPING SLEEVE W/ 6"x8" FLG x FLG ADAPTER & 8" FCA
16. 8" FLG TEE W/ 8" FLG x FLG GV (N&W) & 8" FCA. SEE SHEET C301.
17. 1" WATER SERVICE LINE AND METER.

SANITARY SEWER KEYNOTES

1. EXISTING 8" SANITARY SEWER LINE.
2. EXISTING SANITARY SEWER MANHOLE.

JSRa
JOHNSON SMITTHIPONG & ROSAMOND ASSOCIATES, INC.
5210 E Williams Cir • Ste 600 • Tucson, AZ 85711
(520) 547-7904 • www.jsrarchinc.com

Consultants:

DOWL
WWW.DOWL.COM
4686 East Van Buren Street, Suite 175
Phoenix, Arizona 85008
480-753-0800

iHOUSE APARTMENT PROJECT

INDIAN ROUTE 6290,
TONALEA, AZ 86044

U. S. DEPARTMENT OF HEALTH AND HUMAN SERVICES
INDIAN HEALTH SERVICE
NAVAJO AREA OFFICE

No.	Date	Description

Issue Date:	08/13/2024
Project No:	23-390
Scale:	AS SHOWN
Drawn By:	GSS
Checked By:	SC

PHASE IV (FINAL CD)

Sheet Title:

ROAD EXTENSION PLAN & PROFILE

Sheet Number:

C302

Contact Arizona 811 at least two full working days before you begin excavation
ARIZONA811
Call 811 or click Arizona811.com

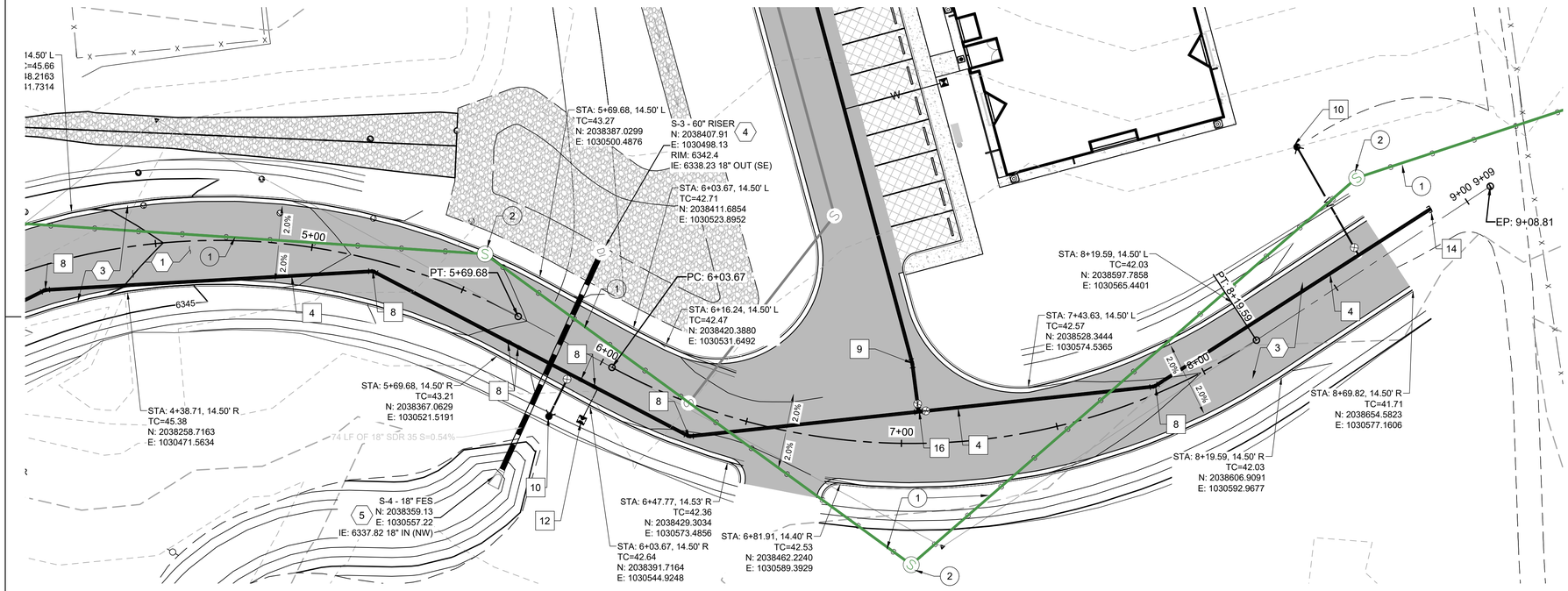

NEW ROAD - STA 4+50 TO STA 9+00

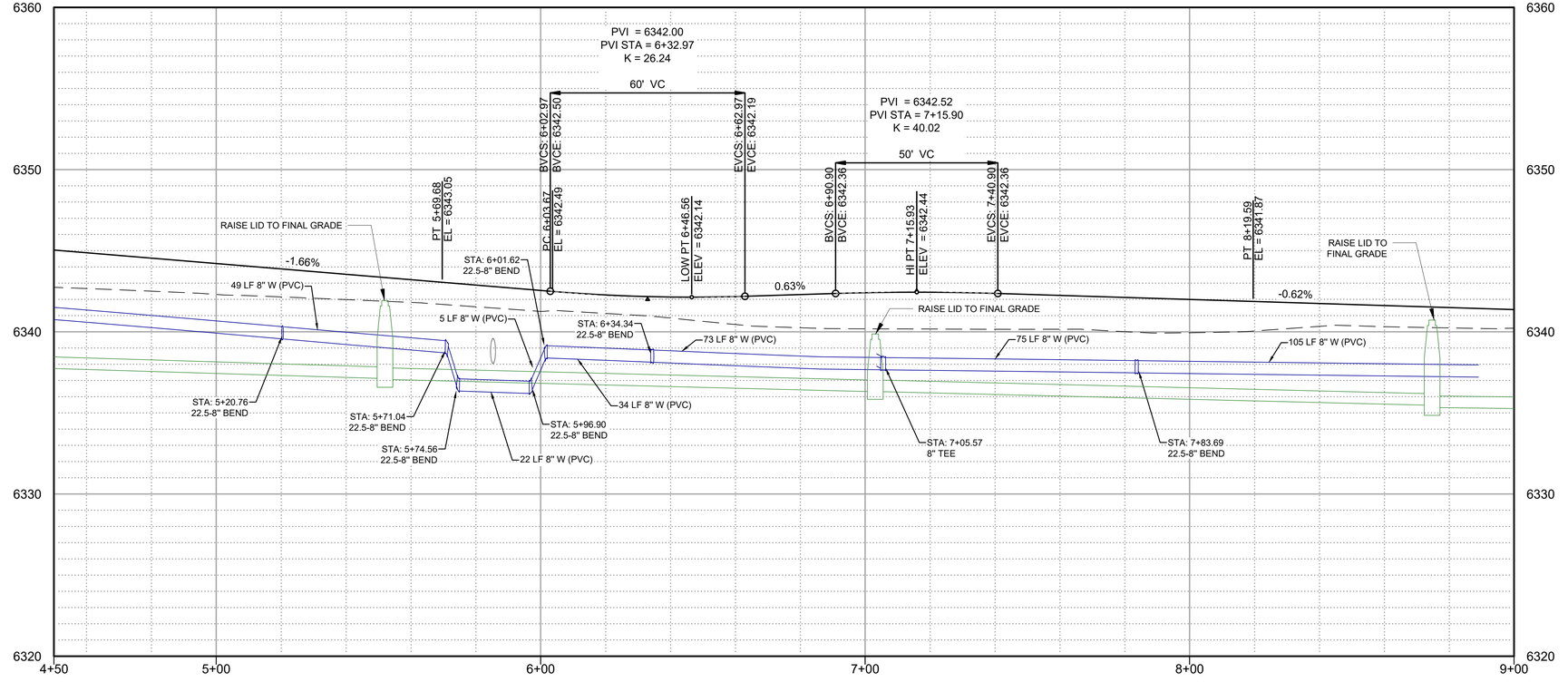

SITE PLAN KEYNOTES

1. ASPHALT CONCRETE PAVEMENT SECTION. 3" AC OVER 6" ABC. SEE DTL 16, SHEET C503.
2. CONCRETE VERTICAL CURB TYPE 'A', PER MAG STD DTL 222.
3. CONCRETE VERTICAL CURB AND GUTTER TYPE 'A', PER MAG STD 220-1.
4. GRAVEL CONE WITH RISER. SEE DTL 27, C504.
5. 18" FLARED END SECTION.
6. CUT EXISTING ASPHALT AND REPLACE WITH NEW PAVEMENT SECTION. SEE DTL 16, SHEET C503

WATER KEYNOTES

1. EXISTING FIELD HYDRANT.
2. EXISTING WATER METER.
3. EXISTING IRRIGATION VALVE.
4. 8" WATER MAIN.
5. CONNECTION TO EXISTING STUB.
6. 8" WATER MAIN.
7. 8" - 45 DEG ELBOW W/TB.
8. 8" - 22.5 DEG ELBOW W/TB.
9. 8" - 11.25 DEG ELBOW W/TB.
10. FIRE HYDRANT ASSEMBLY. SEE DETAIL 11.A, SHEET C501.
11. 8" WATER MAIN WITH GATE VALVE. SEE DETAIL 7, SHEET C501.
12. AIR RELEASE VALVE ASSEMBLY. SEE DETAIL 14, SHEET C502.
13. 6" HOT TAP BOLTED TO 6"X8" EXPANDER. SEE DETAIL 15-B, SHEET 502.
14. FLUSH ASSEMBLY. SEE DETAIL 15, SHEET 502.
15. 6" SIZE-ON-SIZE FLG TAPPING SLEEVE W/ 6"x8" FLG x FLG ADAPTER & 8" FCA
16. 8" FLG TEE W/ 8" FLG x FLG GV (N&W) & 8" FCA. SEE SHEET C301.
17. 1" WATER SERVICE LINE AND METER.

SANITARY SEWER KEYNOTES

1. EXISTING 8" SANITARY SEWER LINE.
2. EXISTING SANITARY SEWER MANHOLE.

Contact Arizona 811 at least two full working days before you begin excavation
ARIZONA811 BLUE STAKE, INC.
Call 811 or click Arizona811.com

JSRa
JOHNSON SMITTHIPONG & ROSAMOND ASSOCIATES, INC.
5210 E Williams Cir • Ste 600 • Tucson, AZ 85711
(520) 547-7904 • www.jsrarchinc.com

Consultants:

DOWL
WWW.DOWL.COM
4686 East Van Buren Street, Suite 175
Phoenix, Arizona 85008
480-753-0800

iHOUSE APARTMENT PROJECT

INDIAN ROUTE 6290,
TONALEA, AZ 86044

U. S. DEPARTMENT OF HEALTH AND HUMAN SERVICES
INDIAN HEALTH SERVICE
NAVAJO AREA OFFICE

No.	Date	Description

Issue Date:	08/13/2024
Project No:	23-390
Scale:	AS SHOWN
Drawn By:	GSS
Checked By:	SC

PHASE IV (FINAL CD)

Sheet Title:

ROAD EXTENSION PLAN & PROFILE

Sheet Number:

C303

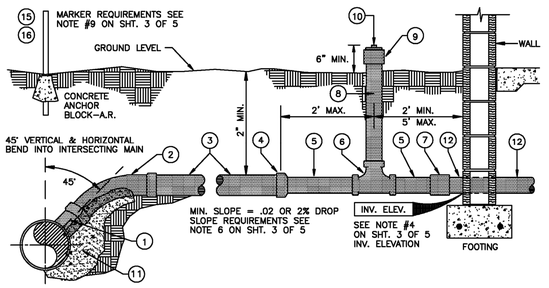

NOTE: NTUA DOES NOT MAINTAIN SEWER SERVICE LINES. THEY ARE THE CUSTOMERS RESPONSIBILITY.

AS–BUILT LOCATION OF TAP	
PROJECT NAME	
PROJECT NO.	
SHEET NO.	
LINE NO.	
STATION NO.	
INV. ELEVATION	
RELATED W.O. NO'S.	

INDEX	PAGES
4" SEWER SERVICE LINE	1 of 6
MATERIAL LIST	2 of 6
GENERAL NOTES	3 of 6
PROPOSED INDIVIDUAL INSTALLATION	4 of 6
INDIVIDUAL AS–BUILT	5 of 6
VICINITY LOCATION OF SERVICE	6 of 6

TESTED IN ACCORDANCE WITH THE NTUA TECHNICAL SPECIFICATIONS TP–4.08 THRU 4.10; DATED MARCH 2003.

BY:_____

NAME/TITLE:_____

DATE:_____

SHEET 1 OF 6

DESIGNED BY:	NTUA
SURVEYED BY:	
DRAWN BY:	NTUA
APPROVED BY:	NTUA
DATE:	04/08
PROJECT NO.	
SCALE:	NTS
ACAD FILENAME:	Water Standard
DWG. NO.	WWS-1

NAVAJO TRIBAL UTILITY AUTHORITY
P.O. BOX 3150 FORT DEFIANCE, ARIZONA
4" STANDARD SEWER SERVICE LINE
RES–ENGINEERING FT.DEFIANCE, AZ

REVISIONS			
No.	Date	Brief	By
01	3/08	REVISED	LH
02			
03			
04			
05			
06			

1 C500 DETAIL - NTUA DETAIL NO. WWS-1
NTS

MATERIAL LIST		
ITEM	QUAN	DESCRIPTION
1	1	45' WYE or SADDLE, 4" SDR–35, PVC x APPROPRIATE PIPE TYPE and O.D.
2	1	4" x 45' ELBOW, SDR–35, PVC, GASKET x GASKET
3	A.R.	4" PIPE, SDR–35, PVC, INTEGRAL BELL with ELASTOMERIC GASKET. (FT.)
4	1	ADAPTER, REDUCING, 4" SDR–35, PVC, ASTM D–3034 x 3" PVC–DWV,
		ASTM D–2665
5	A.R.	3" PIPE, PVC–DWV, ASTM D–2665. (FT.)
6	1	3" TEE, PVC–DWV, HUB x HUB, ASTM D–2665 with a SINGLE RISER.
7	1	3" COUPLING, PVC–DWV, ASTM D–2665.
8	A.R.	3" RISER, PVC–DWV, ASTM D–2665. (FT.)
9	1	3" ADAPTER, HUB x FIPT, PVC–DWV, ASTM D–2665
10	1	3" PLUG, CLEAN OUT, MIPT, PVC–DWV, ASTM D–2665
11	1	CONCRETE, PRE–MIX, (FIELD DETERMINE AS REQUIRED FOR PIPE SUPPORT)
12	1	HOUSE STUB–OUT, APPROPRIATE PIPE TYPE and O.D.
13	1	CEMENT, SOLVENT, PVC. (QUART CAN)
14	1	CLEANER, PVC PIPE. (QUART CAN)
15	A.R.	GREEN CARSONITE MARKER POST
16	A.R.	"NTUA SEWERLINE WARNING" DECAL (for Item 15) * *

NOTES:
1. A.R. = AS REQUIRED
2. ITEM 12 IS USUALLY DONE BY THE HOME OWNER.
3. ITEM 7 MAY BE MODIFIED AS REQUIRED.
4. DECAL TO BE AFFIXED TO ITEM 15**.

SHEET 2 OF 6

DESIGNED BY:	NTUA
SURVEYED BY:	
DRAWN BY:	NTUA
APPROVED BY:	NTUA
DATE:	3/08
PROJECT NO.	
SCALE:	NTS
ACAD FILENAME:	Waterneste Standard
DWG. NO.	WWS-1a

NAVAJO TRIBAL UTILITY AUTHORITY
P.O. BOX 3150 FORT DEFIANCE, ARIZONA
MATERIAL LIST 4" STANDARD SEWER SERVICE
RES–ENGINEERING FT.DEFIANCE, AZ

REVISIONS			
No.	Date	Brief	By
01	3/08	Revised	LJL
02			
03			
04			
05			
06			

2 C500 DETAIL - NTUA DETAIL NO. WWS-1a
NTS

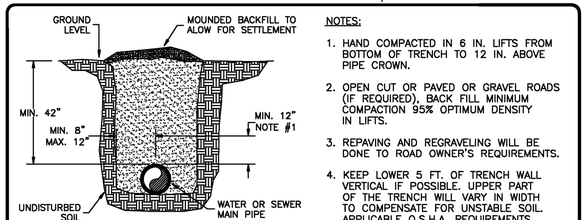

TYPICAL TRENCH DETAIL

NOTES:
1. HAND COMPACTED IN 6 IN. LIFTS FROM BOTTOM OF TRENCH TO 12 IN. ABOVE PIPE CROWN.
2. OPEN CUT OR PAVED OR GRAVEL ROADS (IF REQUIRED), BACK FILL MINIMUM COMPACTION 95% OPTIMUM DENSITY IN LIFTS.
3. REPAVING AND REGRAVELING WILL BE DONE TO ROAD OWNER'S REQUIREMENTS.
4. KEEP LOWER 5 FT. OF TRENCH WALL VERTICAL IF POSSIBLE. UPPER PART OF THE TRENCH WILL VARY IN WIDTH TO COMPENSATE FOR UNSTABLE SOIL. APPLICABLE O.S.H.A. REQUIREMENTS SHALL BE MET.

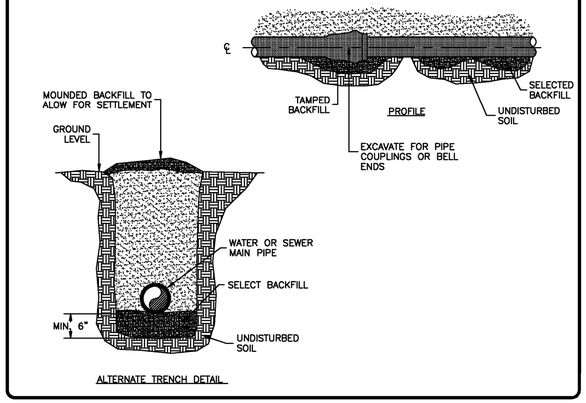

ALTERNATE TRENCH DETAIL

DESIGNED BY:	NTUA
SURVEYED BY:	
DRAWN BY:	NTUA
APPROVED BY:	NTUA
DATE:	3/08
PROJECT NO.	
SCALE:	NTS
ACAD FILENAME:	Waterneste Standard
DWG. NO.	WWS-10

NAVAJO TRIBAL UTILITY AUTHORITY
P.O. BOX 3150 FORT DEFIANCE, ARIZONA
STANDARD TRENCH DETAIL
RES–ENGINEERING FT.DEFIANCE, AZ

REVISIONS			
No.	Date	Brief	By
01	3/08	Revised	LJL
02			
03			
04			
05			
06			

3 C500 DETAIL - NTUA DETAIL NO. WWS-10
NTS

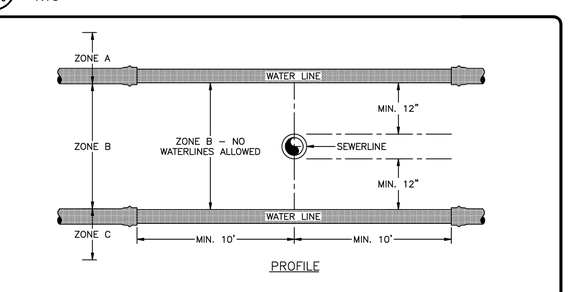

PROFILE

ZONE A – THE BOTTOM OF THE WATER LINE SHALL BE 12" OR MORE ABOVE THE TOP OF THE SEWER LINE – NO SPECIAL PRECAUTIONS REQUIRED.

ZONE B – 12' ABOVE AND 12' BELOW SEWER LINE – NO WATER LINES ALLOWED.

ZONE C – THE TOP OF THE WATER LINE SHALL BE 12" OR MORE BELOW THE BOTTOM OF THE SEWER LINE. IF THE SEWER LINE IS A NEWLY CONSTRUCTED SEWER LINE, AN 18" LENGTH OF DUCTILE IRON SEWER PIPE W/ GASKETED JOINTS SHALL BE CENTERED OVER THE WATER LINE WITH NO JOINTS CLOSER THAN 9' TO THE WATER LINE IN EACH DIRECTION. IF THE WATER LINE IS IN ZONE C AND THE WATER MAIN IS A NEWLY CONSTRUCTED WATER LINE, A 20' LENGTH OF PVC WATER PIPE SHALL BE CENTERED UNDER THE SEWER LINE.

NOTES:

1. WHEN POSSIBLE, WATER LINES SHALL BE INSTALLED ABOVE SEWER LINES AND CROSSINGS SHALL BE AT 90° ANGLE(S).
2. WHEN WATER AND SEWER LINES ARE INSTALLED PARALLEL TO EACH OTHER, THE MINIMUM HORIZONTAL SEPARATION SHALL BE 10'.

DESIGNED BY:	NTUA
SURVEYED BY:	
DRAWN BY:	NTUA
APPROVED BY:	NTUA
DATE:	04/08
PROJECT NO.	
SCALE:	NTS
ACAD FILENAME:	Water Standard
DWG. NO.	WWS-20.DWG

NAVAJO TRIBAL UTILITY AUTHORITY
P.O. BOX 3150 FORT DEFIANCE, ARIZONA
WATER AND SEWER CROSSING SEPERATION
RES–ENGINEERING FT.DEFIANCE, AZ

REVISIONS			
No.	Date	Brief	By
01	04/08	Revised	LJL
02			
03			
04			
05			
06			

4 C500 DETAIL - NTUA DETAIL NO. WWS-8
NTS

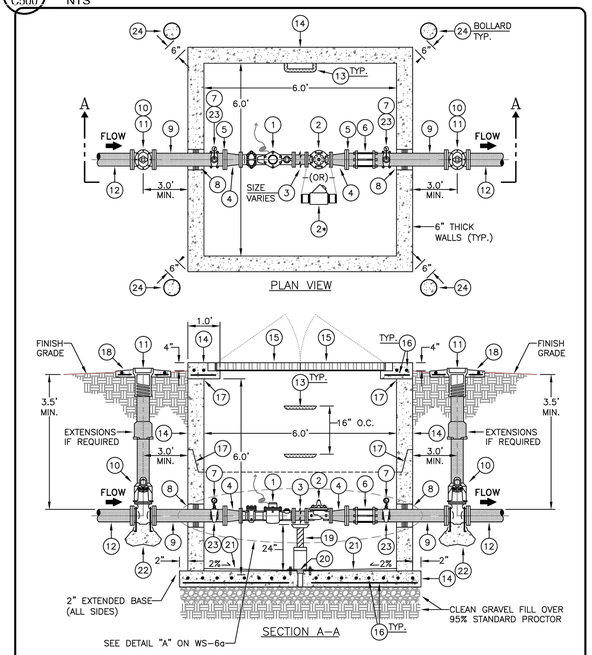

SHEET 1 OF 2

DESIGNED BY:	NTUA
SURVEYED BY:	–
DRAFTED BY:	NTUA
APPROVED BY:	NTUA
DATE:	08/2017
PROJECT NO.	
SCALE:	NTS
ACAD FILENAME:	2017 USA Std 2lb. hr Rebuilt
DETAIL NO.	WS–6

NAVAJO TRIBAL UTILITY AUTHORITY
ENGINEERING & CONSTRUCTION OPERATIONS DIVISION
3"TURBINE METER W/ 3" P.R.V.
NTUA HEADQUARTERS FT.DEFIANCE, AZ

REVISIONS			
No.	Date	Brief	By
01	04/08	Revised	LJL
02	08/17	2017 Update	AS.
03			
04			
05			
06			

25

5 C500 DETAIL - NTUA DETAIL NO. WS-2
NTS

3" TURBINE METER W/ 3" P.R.V.		
(#)	MATERIAL LIST	
ITEM	QTY	DESCRIPTION
1	1	3" ELSTER TS4000 TURBINE METER, FLANGED, GALLONS, W/ E.A. WATER MODULE (AMI)
2	1	3" CLA–VAL, PRESSURE REDUCING VALVE, FLANGED, 90 SERIES W/ OPTIONS A, B, C, D, & V. IF LINE PRESSURE IS 80 PSI OR LESS, INSTALL 3" BRASS CHECK VALVE
3	A.R.	3" DUCTILE IRON (D.I.) SPOOL PIECE, CLASS 350 (LENGTH VARIES PER METER SIZE)
4	2	4" x 3" D.I. REDUCER, CLASS 350, FLANGED
5	2	4" D.I. 'E–Z' FLANGED ADAPTER, CLASS 350
6	1	4" DRESSER COUPLING (6" LONG FOR D.I. PIPE)
7	4	PRESSURE GAUGE W/ 1/4" BRASS SHUTOFF VALVE (GLYCERIN)
8	2	VAULT BORE DONUTS, 8" W/ 4" HOLE
9	A.R.	4" D.I. PIPE, CLASS 350, PLAIN END, CUT AS NEEDED
10	2	4" GATE VALVE, M.J., RESILIENT SEAT, FLANGED, N.R.S., R.H.T., W/ 2" OPERATING NUT
11	2	VALVE BOX, 2–PIECE SCREW TYPE, 5–1/4" SHAFT W/ CAST IRON DROP LID
12	–	EXISTING 4" WATER MAIN LINE
13	A.R.	PLASTIC COATED STEEL OR ALUMINUM STEP @ 16" O.C., INSTALL TO 12" ABOVE VAULT FLOOR
14	1	6' x 6' x 6' (INT. DIM.) PRECAST CONCRETE VAULT (4,000 PSI MIN.), 6" THICK WALLS W/ 6" THICK REINFORCED CONCRETE TOP (8" THICK FOR TRAFFIC RATING) AND 6" REINFORCED CONCRETE BASE
15	1	5' x 5' SQ., INSULATED, DOUBLE DOOR COVER AND SAFETY GRATE, ALUMINUM CHANNEL FRAME W/ HANDLE SLAM LOCK AND COVERED PADLOCK CLIP
16	A.R.	#4 REBAR, E.W.O.C.
17	A.R.	VAULT JOINTS TO BE SEALED WITH BITUMASTIC OR GASKET
18	1	24" x 24" x 4" CONCRETE COLLAR W/ #4 REBAR, E.W., INDICATE PIPE SIZE & FLOW DIRECTION
19	A.R.	ADJUSTABLE METAL PIPE SUPPORT
20	1	2" FLOOR DRAIN W/ SCREEN, DRAIN TO 5" CLEAN GRAVEL (ADJUST PER FIELD CONDITIONS)
21	A.R.	CEMENT, NON–SHRINK GROUT, SLOPE FINISH @ 2% (0.02%) TOWARD VAULT DRAIN
22	A.R.	CONCRETE ANCHOR BLOCK PER NTUA STD. DTL. WS–19 & WS–19a
23	2	2" D.I. DOUBLE STRAP W/ 2" x 3/4" BUSHING AND 3/4" x 1/4" BUSING FOR PRESSURE GAGE
24	4	6" DIA. BOLLARDS AT 6" MIN. FROM VAULT CORNERS PER MAG. STD. 140, TYPE 1

GENERAL NOTES:
1. PROVIDE ADEQUATE CLEARANCE BETWEEN FLANGE BOLTS AND VAULT WALLS FOR MAINTENANCE.
2. GATE VALVES TO BE SUPPORTED ON 95% STANDARD PROCTOR.
3. ALL PIPES AND FITTINGS 4" OR LESS TO BE STAINLESS STEEL.
4. E.A. = EA_WATER MODULE (ENERGY_AXIS MANAGEMENT SYSTEM) FOR AMI.
5. HEX HEAD BOLTS/NUTS TO BE STAINLESS STEEL, TYPE 18–8.
6. A.R. = AS REQUIRED.

DETAIL "A"

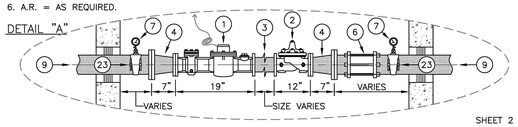

SHEET 2 OF 2

DESIGNED BY:	NTUA
SURVEYED BY:	–
DRAFTED BY:	NTUA
APPROVED BY:	NTUA
DATE:	08/2017
PROJECT NO.	–
SCALE:	NTS
ACAD FILENAME:	2017 USA Std 2lb. hr Rebuilt
DETAIL NO.	WS–6a

NAVAJO TRIBAL UTILITY AUTHORITY
ENGINEERING & CONSTRUCTION OPERATIONS DIVISION
MATERIAL LIST: 3" TURBINE METER W/ 3" P.R.V.
NTUA HEADQUARTERS FT.DEFIANCE, AZ

REVISIONS			
No.	Date	Brief	By
01	04/08	Revised	LJL
02	08/17	2017 Update	AS.
03			
04			
05			
06			

26

6 C500 DETAIL - NTUA DETAIL NO. WS-2a
NTS

Contact Arizona 811 at least two full working days before you begin excavation
ARIZONA811 Call 811 or click Arizona811.com

JSRa
JOHNSON SMITTHIPONG & ROSAMOND ASSOCIATES, INC.
5210 E Williams Cir • Ste 600 • Tucson, AZ 85711
(520) 547-7904 • www.jsrarchinc.com

Consultants:

DOWL
WWW.DOWL.COM
4686 East Van Buren Street, Suite 175
Phoenix, Arizona 85008
480-753-0800

iHOUSE APARTMENT PROJECT

INDIAN ROUTE 6290,
TONALEA, AZ 86044

U. S. DEPARTMENT OF HEALTH AND HUMAN SERVICES
INDIAN HEALTH SERVICE
NAVAJO AREA OFFICE

No.	Date	Description

Issue Date:	08/13/2024
Project No:	23-390
Scale:	AS SHOWN
Drawn By:	GSS
Checked By:	SC

PHASE IV (FINAL CD)

Sheet Title:

DETAILS

Sheet Number:

C500

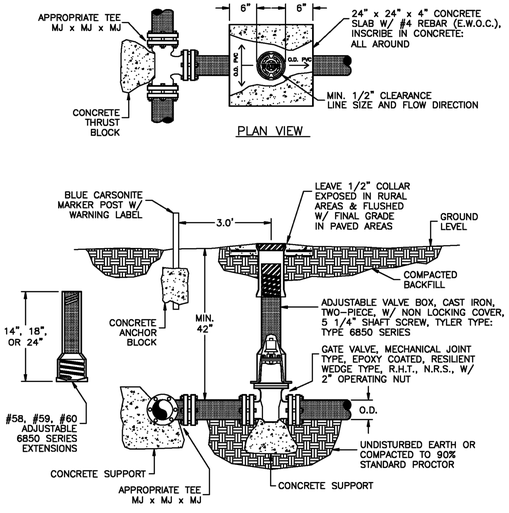

NOTES:

1. IF APPROPRIATE, USE SERIES 2000 PV MEGALUG GLANDS FOR SDR-21, PVC TO SECURE GATE VALVE(S) TO OTHER FITTINGS/PIPE, USE OTHER MEGALUGS FOR DIFFERENT OUTSIDE DIAMETER PIPE/TYPE.
2. DO NOT COVER JOINTS AND BOLTS WITH CONCRETE.
3. SEE WS-13 FOR APPROPRIATE LOCATION OF MARKER POST.

DESIGNED BY:	NTUA
SURVEYED BY:	
DRAWN BY:	NTUA
APPROVED BY:	NTUA
DATE:	04/08
PROJECT NO.	
SCALE:	NTS
ACAD FILENAME:	Water Standard
DWG. NO.	WS-16.DWG

NAVAJO TRIBAL UTILITY AUTHORITY
WATER MAIN TAP W/GATE VALVE
RES-WINDOWROCK FT.DEFIANCE, AZ

REVISIONS		
No.	Date	Brief
01	04/08	Revised
02		
03		
04		
05		
06		

By: L.H.

7 / C501 DETAIL - NTUA DETAIL NO. WS-16
NTS

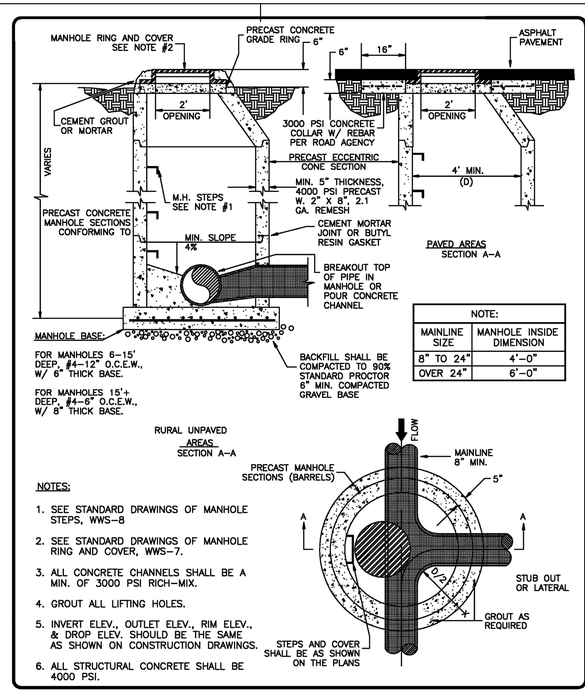

NOTE:	
MAINLINE SIZE	MANHOLE INSIDE DIMENSION
8" TO 24"	4'-0"
OVER 24"	6'-0"

NOTES:

1. SEE STANDARD DRAWINGS OF MANHOLE STEPS, WWS-8
2. SEE STANDARD DRAWINGS OF MANHOLE RING AND COVER, WWS-7.
3. ALL CONCRETE CHANNELS SHALL BE A MIN. OF 3000 PSI RICH-MIX.
4. GROUT ALL LIFTING HOLES.
5. INVERT ELEV., OUTLET ELEV., RIM ELEV., & DROP ELEV. SHOULD BE THE SAME AS SHOWN ON CONSTRUCTION DRAWINGS.
6. ALL STRUCTURAL CONCRETE SHALL BE 4000 PSI.

DESIGNED BY:	NTUA
SURVEYED BY:	
DRAWN BY:	NTUA
APPROVED BY:	NTUA
DATE:	3/08
PROJECT NO.	
SCALE:	NTS
ACAD FILENAME:	Waterwaste Standard
DWG. NO.	WWS-4

NAVAJO TRIBAL UTILITY AUTHORITY
STANDARD PRECAST SEWER MANHOLE DETAIL
RES-WINDOWROCK FT.DEFIANCE, AZ

REVISIONS		
No.	Date	Brief
01	3/08	Revised
02		
03		
04		
05		
06		

By: L.H.

8 / C501 DETAIL - NTUA DETAIL NO. WWS-4
NTS

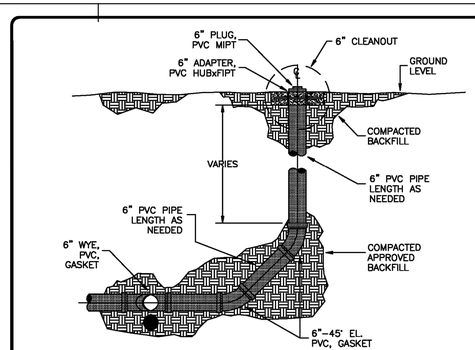

NOTES:

1. 100 FT. MAX. BETWEEN CLEANOUTS.
2. CLEANOUT REQUIRED AT UPSTREAM OF ANY BEND IN EXCESS OF 45°.

DESIGNED BY:	NTUA
SURVEYED BY:	
DRAWN BY:	NTUA
APPROVED BY:	NTUA
DATE:	3/08
PROJECT NO.	
SCALE:	NTS
ACAD FILENAME:	Waterwaste Standard
DWG. NO.	WWS-13

NAVAJO TRIBAL UTILITY AUTHORITY
6" SEWER CLEANOUT DETAIL
RES-WINDOWROCK FT.DEFIANCE, AZ

REVISIONS		
No.	Date	Brief
01	3/08	Revised
02		
03		
04		
05		
06		

By: L.H.

9 / C501 DETAIL - NTUA DETAIL NO. WWS-13
NTS

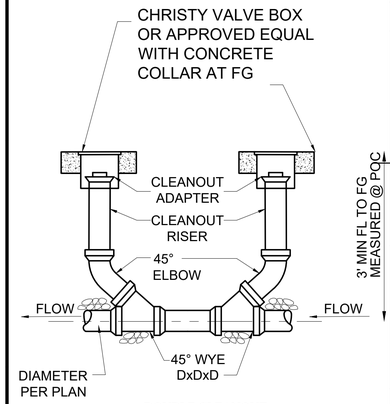

DOUBLE CLEANOUT

NOTES:

1. ALL FITTINGS SHALL BE GASKETED.
2. CLEANOUTS TO BE SAME DIAMETER AS SERVICE LINE.

10 / - DOUBLE CLEANOUT
NTS

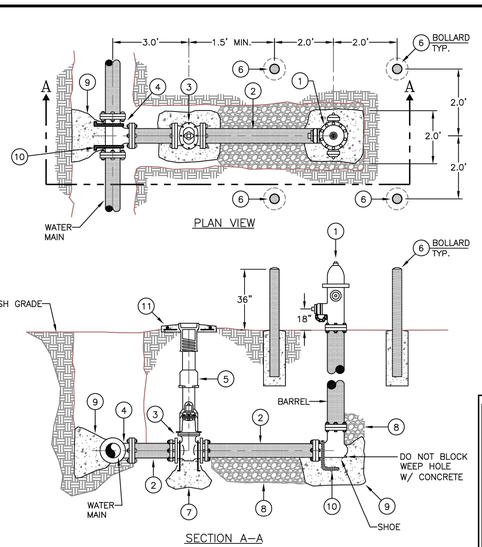

NOTES:

1. CONTRACTOR MAY SUBSTITUTE A COMBINATION OF SERIES 2000 PV MEGALUG GLANDS AND SERIES 6500 JOINTS RETAINERS (EBAA IRON) FOR FIRE HYDRANT CONCRETE BLOCKING.
2. FIRE HYDRANT GUARD BOLLARD TO BE SCHEDULE 40 STEEL, MIN.
3. PAINT GUARD BOLLARDS WITH RED EXTERIOR ENAMEL AND FILL HYDRANT GUARD POSTS WITH CONCRETE PER MAG STD. DTL. 140.
4. HYDRANT PUMPER NOZZLE TO BE FACING WATER MAIN AND/OR STREET.
5. THE NTUA DOES NOT PROVIDE FIRE FLOW.

SHEET 1 OF 2

FIRE HYDRANT, VALVE, AND BOLLARD		
MATERIAL LIST		
ITEM	QTY	DESCRIPTION
1	1	HYDRANT, 4-FT BURY W/ TRAFFIC FLANGE & 1- 4 1/2" PUMPER CONNECTION (A) 2 - 2 1/2" HOSE CONNECTION (B) MUELLER A423 OR KENNEDY K81A W/ 5 1/4" VALVE M.J.
2	2	6" PVC PIPE, LENGTH AS NEEDED, 200 PSI, SDR-21
3	1	6" M.J. GATE VALVE, NRS, RSW, RHT, 2" OPERATION NUT
4	1	M.J. TEE AS REQUIRED, M.J. 6" BRANCH
5	1	GATE VALVE BOX, 5 1/4" W/ CAST IRON LID, LID TYLER 6850
6	4	6" DIA. BOLLARD PER MAG. STD. 140, TYPE 1
7	A.R.	CONCRETE ANCHOR BLOCK, 1.5 CUBIC FEET MIN. (DON'T COVER JOINTS AND BOLTS)
8	A.R.	CRUSHED ROCK 1" TO 2" DIAMETER
9	A.R.	CONCRETE THRUST BLOCK, (SEE NTUA STANDARDS FOR TEE)
10	1	#4 REBAR TIE HOOP
11	1	CONCRETE COLLAR, 24" SQUARE x 4" THICK, W/ #4 REBAR, E.W.O.C., INSCRIBED W/ LINE SIZE, TYPE OF PIPE, AND DIRECTION OF FLOW W/ ARROW

NOTES:
1. A.R. = AS REQUIRED

DESIGNED BY:	NTUA
DRAWN BY:	NTUA
DRAFTED BY:	NTUA
APPROVED BY:	NTUA
DATE:	08/2017
PROJECT NO.	--
SCALE:	NTS
ACAD FILENAME:	2017 WSA Std. Dtls. for Bidding
DETAIL NO.:	WS-12

NAVAJO TRIBAL UTILITY AUTHORITY
ENGINEERING & CONSTRUCTION OPERATIONS DIVISION
FIRE HYDRANT, VALVE, AND BOLLARD DETAIL
NTUA HEADQUARTERS FT.DEFIANCE, AZ

REVISIONS		
No.	Date	Brief
01	04/08	Revised
02	08/17	2017 Update
03		
04		
05		
06		

By: L.H. A.S.

35

11.A / C501 DETAIL - NTUA DETAIL NO. WS-12
NTS

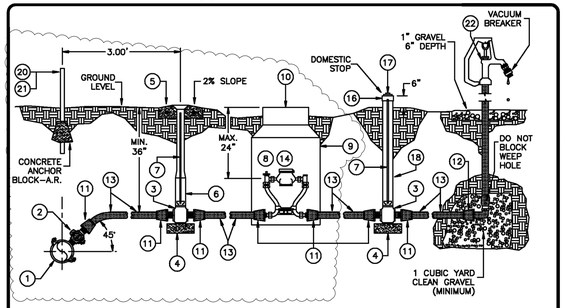

NOTE: CLOUDED AREA TO BE REMOVED FOR THIS PROJECT

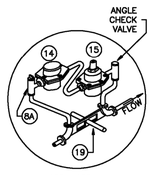

AS-BUILT LOCATION OF TAP	
SYSTEM NAME	
PROJECT NO.	
SHEET NO.	
LINE NO.	
STATION NO.	

NOTES:

1. TEST DURATION SHALL BE FOR 2 HOURS.

DATE PERFORMED: _____. LAB SAMPLE NO.: _____. INITIALED (NTUA): _____.

SHEET 1 OF 2

DESIGNED BY:	NTUA
SURVEYED BY:	
DRAWN BY:	NTUA
APPROVED BY:	NTUA
DATE:	04/08
PROJECT NO.	
SCALE:	NTS
ACAD FILENAME:	Waterwaste Standard
DWG. NO.	WS-4.DWG

NAVAJO TRIBAL UTILITY AUTHORITY
YARD HYDRANT SERVICE
RES-WINDOWROCK FT.DEFIANCE, AZ

REVISIONS		
No.	Date	Brief
01	04/08	Revised
02		
03		
04		
05		
06		

By: L.H.

11 / C501 DETAIL - NTUA DETAIL NO. WS-4
NTS

MATERIAL LIST		
ITEM	QUAN	DESCRIPTION
1	1	SADDLE, BRASS, 1" FIPT x APPROPRIATE PIPE TYPE, O.D., AND LINE PRESSURE
2	1	CORPORATION STOP, 1" MIPT x 1" FIPT, MUELLER H-10046, OAE
3	2	CURB STOP, 1" FIPT x 1" FIPT, MINNEAPOLIS PATTERN W/ O-RING, MUELLER H-10287, OAE
4	A.R.	CONCRETE BLOCK OR BRICK
5	A.R.	CONCRETE COLLAR, 18" SQUARE x 4" THICK, W/ #4 REBARS, E.W.O.C.
6	1	CURB VALVE BOX, EXTENSION TYPE, MUELLER H-10302, W/ 2" x 1 1/2" BUSHING
7	2	STATIONARY ROD 36" LONG, MUELLER PART #B4338, SECURED TO THE CURB STOP W/ COTTER PIN
8	1	COPPERSETTER W/ VALVED 12" RISER, 5/8" x 3/4" WATER METER, FORD NO. VHC72-12W-FF-44, OAE, W/ 1" IP UNION NUT/SWIVEL ASSEMBLY CONNECTION ON INLET, OUTLET, AND BRACING EYE
8A	1	TANDEM COPPERSETTER WITH VALVED 12" RISER, 5/8 x 3/4" WATER METER, FORD NO. TVHC72-12W-FF-44, OAE, W/ TWO REGULATOR ADAPTERS FOR THE PRV
9	1	METER CAN, 20" O.D. x 30" HT., DFW PLASTIC, DFW 2030 B SERIES "T" TOP
10	1	METER BOX COVER W/ FROST PLATE, FOR 20" METER CAN, 11 1/2" MINIMUM LID OPENING, CASTING M-70
11	7	INSTA-TITE FITTING, 1" MIPT x 1" STAB FOR SIDR 7 P.E. PIPE, MUELLER H15426
12	1	CONNECTOR/ADAPTER, 1" MIPT x APPROPRIATE PIPE TYPE AND O.D.
13	A.R.	PIPE, 1" P.E., ASTM D-2239, SIDR 7, 200 PSI, 200' MAX.
14	1	METER, POSITIVE DISPLACEMENT, NEPTUNE, SR, 5/8" x 3/4", GALLONS, W/ FROST PLATE
15	1	PRV, WILKINS 600 OR WATTS 25 AUB, 3/4" FIPT
16	1	ADAPTER, 3" HUB x FIPT PVC-DWV
17	1	CLEANOUT PLUG, 3" MIPT, PVC-DWV
18	1	RISER, 3" x 36" LONG, PVC-DWV
19	1	STABILIZER, 1/2" O.D. x 12" LONG PIPE, PVC, SCH. 40
20	A.R.	BLUE CARSONITE MARKER POST
21	A.R.	"WATERLINE WARNING" DECAL (FOR ITEM 20)
22	1	HYDRANT, FROST FREE, 3/4" x 3' BURY, MERRIL MFG., ORDER NO. E7503, OAE

NOTES:
1. A.R. = AS REQUIRED
2. DECAL TO BE APPLIED TO ITEM NO. 20.
3. NORMAL FLOW RATE = 1-20 GPM.
4. NTUA WILL NOT PROVIDE WATER METERS FOR SUBDIVISIONS AND DEVELOPERS.
5. WATER METER SERIAL NUMBER: _____
6. SADDLE SIZE: _____

SHEET 2 OF 2

DESIGNED BY:	NTUA
SURVEYED BY:	
DRAWN BY:	NTUA
APPROVED BY:	NTUA
DATE:	04/08
PROJECT NO.	
SCALE:	NTS
ACAD FILENAME:	Water Standard
DWG. NO.	WS-4a.DWG

NAVAJO TRIBAL UTILITY AUTHORITY
MATERIAL LIST: YARD HYDRANT SERVICE
RES-WINDOWROCK FT.DEFIANCE, AZ

REVISIONS		
No.	Date	Brief
01	04/08	Revised
02		
03		
04		
05		
06		

By: L.H.

12 / C501 DETAIL - NTUA DETAIL NO. WS-4a
NTS

Contact Arizona 811 at least two full working days before you begin excavation
ARIZONA811
Call 811 or click Arizona811.com

JSRa
JOHNSON SMITTHIPONG & ROSAMOND ASSOCIATES, INC.
5210 E Williams Cir • Ste 600 • Tucson, AZ 85711
(520) 547-7904 • www.jsrarchinc.com

Consultants:

DOWL
WWW.DOWL.COM
4686 East Van Buren Street, Suite 175
Phoenix, Arizona 85008
480-753-0800

iHOUSE APARTMENT PROJECT

INDIAN ROUTE 6290,
TONALEA, AZ 86044

U. S. DEPARTMENT OF HEALTH AND HUMAN SERVICES
INDIAN HEALTH SERVICE
NAVAJO AREA OFFICE

No.	Date	Description

Issue Date:	08/13/2024
Project No:	23-390
Scale:	AS SHOWN
Drawn By:	GSS
Checked By:	SC

PHASE IV (FINAL CD)

Sheet Title:

DETAILS

Sheet Number:

C501

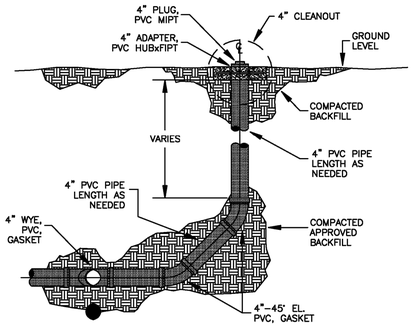

PROFILE VIEW

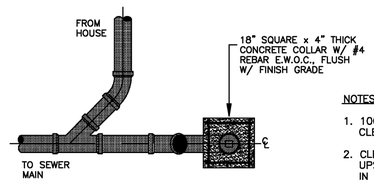

PLAN VIEW

NOTES:

1. 100 FT. MAX. BETWEEN CLEANOUTS.
2. CLEANOUT REQUIRED AT UPSTREAM OF ANY BEND IN EXCESS OF 45°.

DESIGNED BY:	NTUA
SURVEYED BY:	
DRAWN BY:	NTUA
APPROVED BY:	NTUA
DATE:	3/99
PROJECT NO.	
SCALE:	NTS
ACAD FILENAME:	Veterinarie Standard
DWG. NO.	WWS-12

NAVAJO TRIBAL UTILITY AUTHORITY
P.O. BOX 3089 FORT DEFIANCE, AZ 86504

4" SEWER CLEANOUT DETAIL

REVISIONS		
No.	Date	By
		Brief Revised
1	3/99	Lab
2		
3		
4		
5		

13 C502 DETAIL - NTUA DETAIL NO. WWS-12
NTS

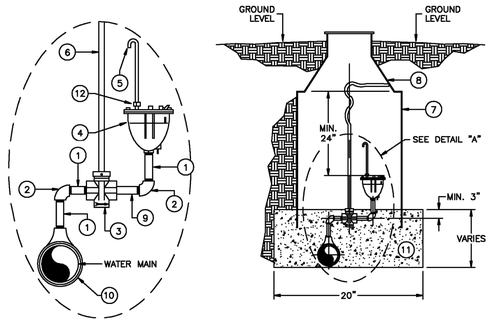

DETAIL "A"

MATERIAL LIST		
ITEM	QUAN	DESCRIPTION
1	3	3/4' x 3" NIPPLE, BRASS
2	2	3/4" x 90° ELBOW, BRASS
3	1	3/4" CURB STOP VALVE, FIPT, MUELLER H-10287, OAE
4	1	3/4" IN x 3/8" OUT AIR RELEASE VALVE
5	1	3/8" O.D. PIPE, COPPER, 12" MIN.
6	1	STATIONARY ROD, 42"
7	1	METER CAN, 20" O.D. x 30" DEPTH, SONOLOC
8	1	METER CAN COVER W/ DOUBLE LID (FROST PLATE) FOR 20" O.D. CAN, CASTING M-70
9	1	3/4" x 6" NIPPLE, BRASS
10	1	SADDLE, BRASS, 3/4" TAP x APPROPRIATE PIPE O.D. SIZE
11	3 CF*	1" TO 2" FILTER ROCK
12	1	ADAPTER, 3/8" MIPT x 1/2" COMPRESSION

*CF = CUBIC FEET

DESIGNED BY:	NTUA
SURVEYED BY:	
DRAWN BY:	NTUA
APPROVED BY:	NTUA
DATE:	04/99
PROJECT NO.	
SCALE:	NTS
ACAD FILENAME:	Water Standard
DWG. NO.	WS-10.DVG

NAVAJO TRIBAL UTILITY AUTHORITY
P.O. BOX 3089 FORT DEFIANCE, AZ 86504

AIR RELEASE VALVE DETAIL

REVISIONS		
No.	Date	By
		Brief Revised
1	04/99	Lab
2		
3		
4		
5		

14 C502 DETAIL - NTUA DETAIL NO. WS-10
NTS

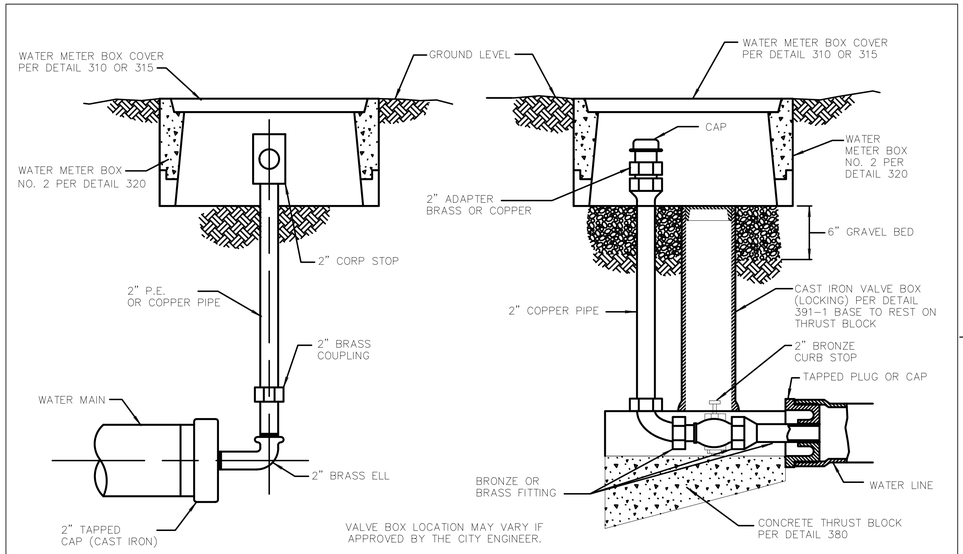

VALVE BOX LOCATION MAY VARY IF APPROVED BY THE CITY ENGINEER.

TYPE 'A' TYPE 'B'

DETAIL NO.	STANDARD DETAIL		REVISED	DETAIL NO.
390	MARICOPA ASSOCIATION of GOVERNMENTS	ENGLISH CURB STOP WITH FLUSHING PIPE	01-01-2018	390

15 C502 DETAIL - MAG CURB STOP WITH FLUSHING PIPE
NTS

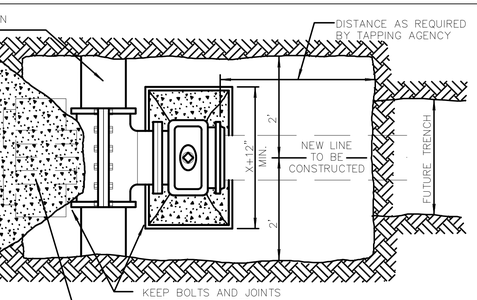

PLAN

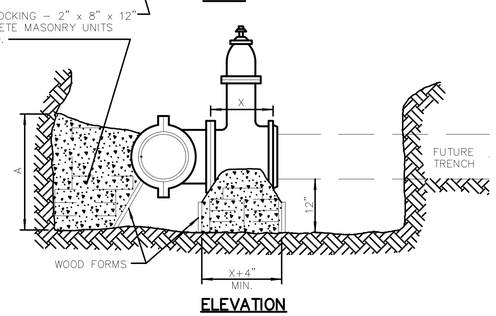

ELEVATION

NOTES:

1. TAPPING SLEEVE TO BE PLACED A MINIMUM OF 18" FROM ANY BELL COUPLING, VALVE, FITTING OR OTHER OBSTRUCTION
2. CONTRACTOR SHALL EXCAVATE AS SHOWN AND SHALL SET TAPPING SLEEVE AND VALVE AND TIGHTEN ALL BOLTS PRIOR TO THE PRESSURE TEST.
3. ALL TAPPING SLEEVES AND VALVES MUST BE PRESSURE TESTED PRIOR TO BLOCKING OR TAPPING. THE TEST MUST BE WITNESSED AND APPROVED BY THE INSPECTOR.
4. BLOCKS ARE TO EXTEND TO UNDISTURBED GROUND AND BE INSTALLED BEFORE THE TAP IS MADE. ALL FLANGE BOLTS SHALL BE FREE AND CLEAR OF CONCRETE.
5. CONCRETE THRUST BLOCKS SHALL BE CLASS 'B' PER SECT. 725. NORMALLY, CURE TIME FOR CONCRETE IS 24 HOURS BEFORE BACKFILLING.
6. TAPS SHALL BE MADE BY CITY CREWS AT PREVAILING RATES OR BY APPROVED CONTRACTORS WHEN ALLOWED BY AGENCY.
7. THIS DETAIL COVERS TAPPING SLEEVES 4" THROUGH 16" IN SIZE ON DUCTILE IRON, CAST IRON AND ASBESTOS CEMENT PIPE. ANY OTHER SIZE OR TYPE OF PIPE WILL REQUIRE A SEPARATE SUBMITTAL AND APPROVAL BY THE ENGINEER.

SIZE OF PIPE BEING CONNECTED	MINIMUM THRUST AREA REQUIRED EQUALS (AxB) (SQUARE FEET)
4" AND LESS	3
6"	4
8"	6
10"	9
12"	13
16"	23

DETAIL NO.	STANDARD DETAIL		REVISED	DETAIL NO.
340	MARICOPA ASSOCIATION of GOVERNMENTS	ENGLISH INSTALLING TAPPING SLEEVES AND VALVES	01-03-2002	340

15-B C502 DETAIL - MAG TAPPING SLEEVES AND VALVE
NTS

PIPE SIZE	MIN BAR SIZE	"A"-DIMENSION HOOK	MIN. * BLOCK DIM.
6"	#6	6"	3' x 3' x 3'
8"	#6	9"	4' x 4' x 2.5'
12"	#8	9"	4' x 4' x 5'

* FOR 125 P.S.I. WORKING PRESSURE.

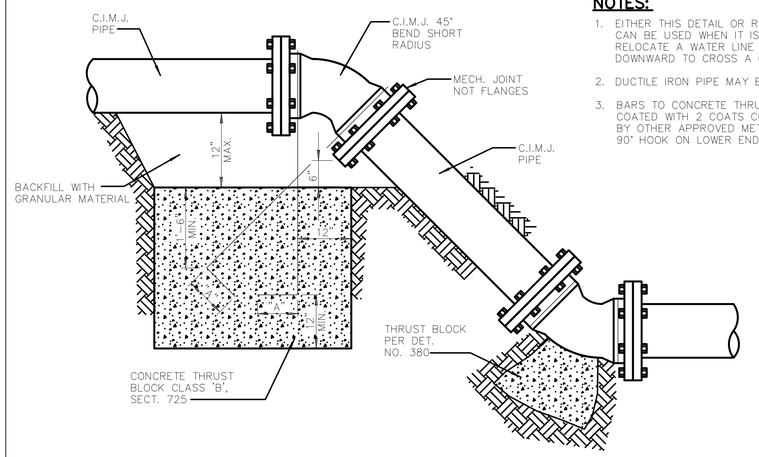

NOTES:

1. EITHER THIS DETAIL OR RESTRAINT RODS CAN BE USED WHEN IT IS ALLOWED TO RELOCATE A WATER LINE UPWARD OR DOWNWARD TO CROSS A CONFLICT.
2. DUCTILE IRON PIPE MAY BE USED.
3. BARS TO CONCRETE THRUST BLOCK TO BE COATED WITH 2 COATS COAL TAR, EPOXY OR BY OTHER APPROVED METHOD. BARS TO HAVE 90° HOOK ON LOWER END, AS PER TABLE.

DETAIL NO.	STANDARD DETAIL		REVISED	DETAIL NO.
381	MARICOPA ASSOCIATION of GOVERNMENTS	ENGLISH ANCHOR BLOCKS FOR VERTICAL BENDS	01-01-1998	381

15-C C502 DETAIL - MAG ANCHOR BLOCKS FOR VERTICAL BENDS
NTS

Contact Arizona 811 at least two full working days before you begin excavation
ARIZONA811
Call 811 or click Arizona811.com

JSRa
JOHNSON SMITTHIPONG & ROSAMOND ASSOCIATES, INC.
5210 E Williams Cir • Ste 600 • Tucson, AZ 85711
(520) 547-7904 • www.jsrarchinc.com

Consultants:

DOWL
WWW.DOWL.COM
4686 East Van Buren Street, Suite 175
Phoenix, Arizona 85008
480-753-0800

iHOUSE APARTMENT PROJECT

INDIAN ROUTE 6290,
TONALEA, AZ 86044

U. S. DEPARTMENT OF HEALTH AND HUMAN SERVICES
INDIAN HEALTH SERVICE
NAVAJO AREA OFFICE

No.	Date	Description

Issue Date:	08/13/2024
Project No:	23-390
Scale:	AS SHOWN
Drawn By:	GSS
Checked By:	SC

PHASE IV (FINAL CD)

Sheet Title:

DETAILS

Sheet Number:

C502

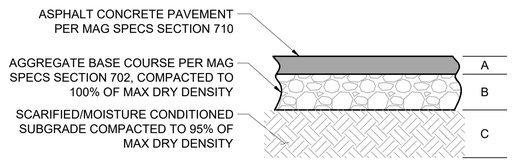

STANDARD AC

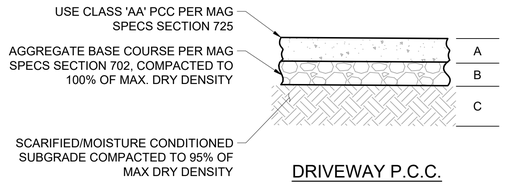

DRIVEWAY P.C.C.

TYPE	SECTION DEPTH (INCHES) A	B	C
HEAVY DUTY AC	3	6	12
LIGHT DUTY AC	3	6	12
HEAVY DUTY P.C.C.	6	4	12

*DEPTH PER GEOTECHNICAL REPORT.

NOTE:
COMPACTION AND DEPTH OF SECTIONS IN TABLE SHALL BE CONFIRMED WITH LATEST GEOTECHNICAL REPORT.

16 C503 DETAIL - PAVEMENT SECTIONS
NTS

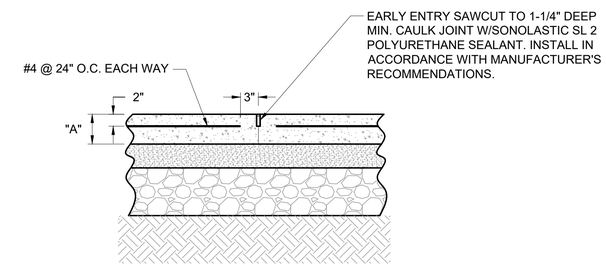

NOTES:
1. SEE DETAIL 16, THIS SHEET FOR PAVEMENT INFORMATION.
2. REBAR SHALL BE 3" CLEAR OF ALL CONTRACTION JOINTS.

17 C503 DETAIL - REINFORCING AT DRIVEWAY PCC PAVEMENT SECTION
NTS

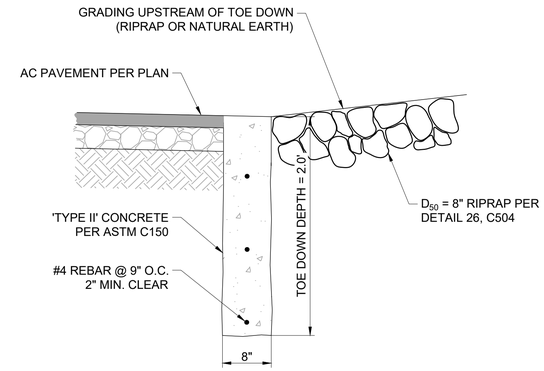

NOTE:
FORM THE TOP 8" OF THE TOE DOWN.

18 C503 DETAIL - TOE DOWN AT PAVEMENT EDGE
NTS

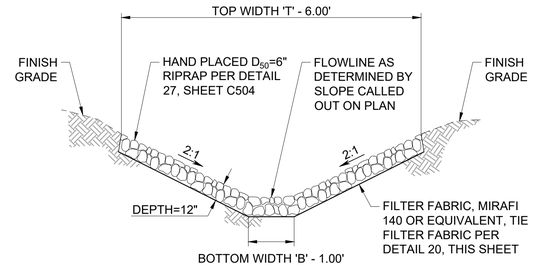

NOTE:
FILTER FABRIC NOT PROPERLY ANCHORED AND RIPRAP NOT PROPERLY PLACED WILL BE REJECTED.

19 C503 DETAIL - RIPRAP SWALE
NTS

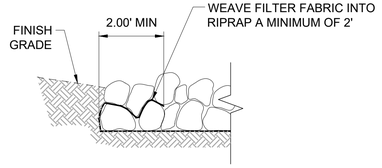

20 C503 DETAIL - FILTER FABRIC TIE DOWN AT EDGE OF RIPRAP
NTS

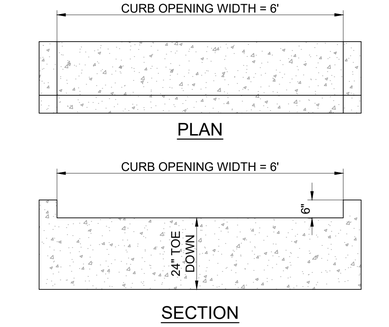

21 C503 DETAIL - CURB OPENING
NTS

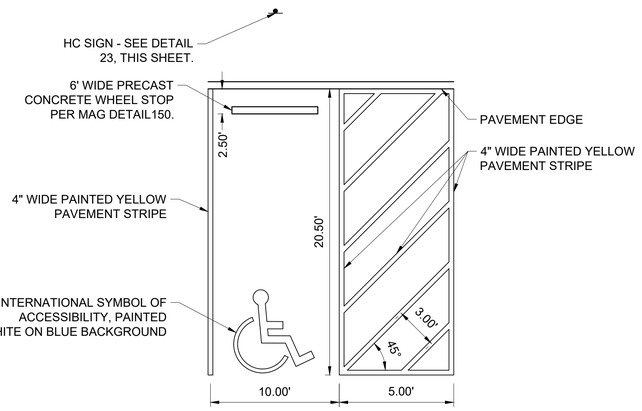

22 C503 DETAIL - ACCESSIBLE PARKING SPACE
NTS

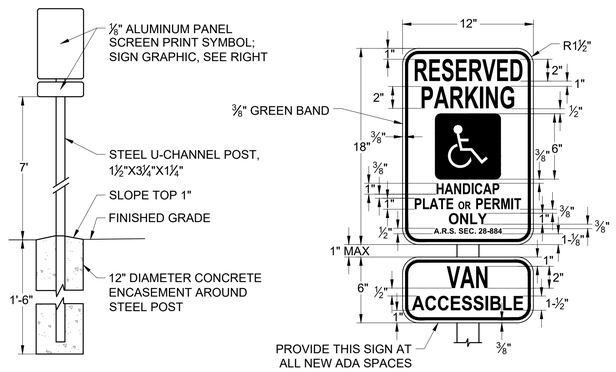

23 C503 DETAIL - ACCESSIBLE PARKING SPACE SIGNAGE
NTS

NOTES:

1. TOP OF RIPRAP TO BE AT FLOWLINE OR GRADE AS INDICATED ON PLAN (WITHIN VARIANCE GIVEN). RIPRAP PLACED ABOVE FINAL GRADE WILL NOT BE ACCEPTED.
2. RIPRAP SHALL BE ANGULAR AND SHALL NOT EXCEED 3:1 RATIO FOR FLAT AND ELONGATED PIECES (ASTM D4791). RIVER ROCK WILL NOT BE ACCEPTED.
3. INSTALL FILTER FABRIC PER MANUFACTURERS RECOMMENDATIONS.
4. RIPRAP COLOR TO BE COORDINATED WITH ARCHITECT/OWNER.

ROCK RIPRAP GRADATION

SIZE	PERCENT FINER
$0.2D_{50}$	0
$0.5D_{50}$	15
$0.75D_{50}$	30
$1.0D_{50}$	50
$1.5D_{50}$	95
$2.0D_{50}$	100

RIPRAP SHALL BE HAND PLACED. RIPRAP DUMPED OR PLACED ABOVE THE FINAL GRADE OR FLOWLINE INDICATED ON THE PLAN WILL BE REJECTED.

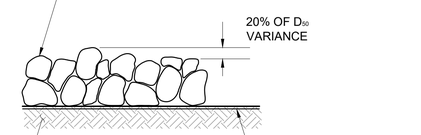

HAND-PLACED

24 C503 DETAIL - RIPRAP PLACEMENT
NTS

Contact Arizona 811 at least two full working days before you begin excavation
ARIZONA811
Call 811 or click Arizona811.com

JSRa
JOHNSON SMITTHIPONG & ROSAMOND ASSOCIATES, INC.
5210 E Williams Cir • Ste 600 • Tucson, AZ 85711
(520) 547-7904 • www.jsrarchinc.com

Consultants:

DOWL
WWW.DOWL.COM
4686 East Van Buren Street, Suite 175
Phoenix, Arizona 85008
480-753-0800

iHOUSE APARTMENT PROJECT

INDIAN ROUTE 6290,
TONALEA, AZ 86044

U. S. DEPARTMENT OF HEALTH AND HUMAN SERVICES
INDIAN HEALTH SERVICE
NAVAJO AREA OFFICE

No.	Date	Description

Issue Date:	08/13/2024
Project No:	23-390
Scale:	AS SHOWN
Drawn By:	GSS
Checked By:	SC

PHASE IV (FINAL CD)

Sheet Title:

DETAILS

Sheet Number:

C503

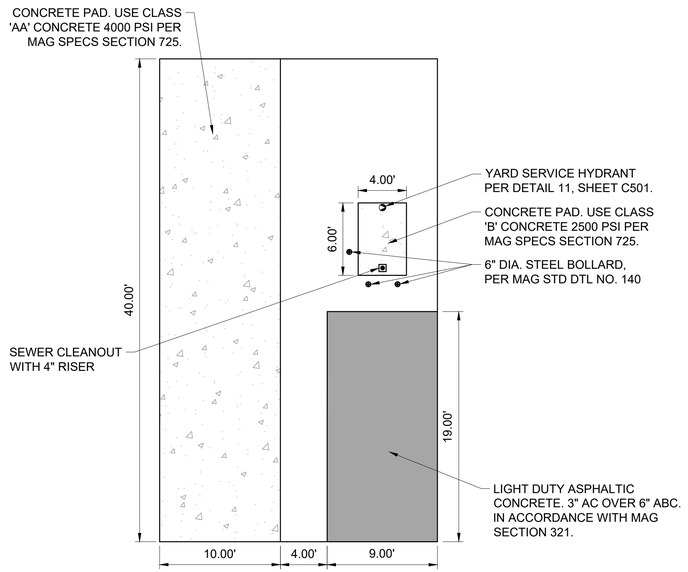

25 C504 DETAIL - RV LAYOUT
NTS

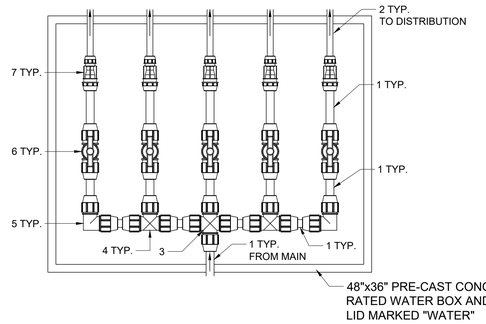

DISTRIBUTION JUNCTION LEGEND	
1	2" HDPE PIPE
2	1" HDPE PIPE
3	2" BRASS HDPE COMPRESSION CROSS
4	2" BRASS HDPE COMPRESSION TEE
5	2" BRASS HDPE COMPRESSION 90-DEG ELBOW
6	2" BRASS HDPE COMPRESSION BALL VALVE
7	2" x 1" BRASS HDPE COMPRESSION REDUCER COUPLING

NOTES

1. INSTALL 6" LAYER OF AGGREGATE BASE BELOW BOX.
2. INSTALL TOP OF BOX FLUSH TO FINISHED GRADE

26 C504 2" SERVICE LINE CONNECTION DETAIL
NTS

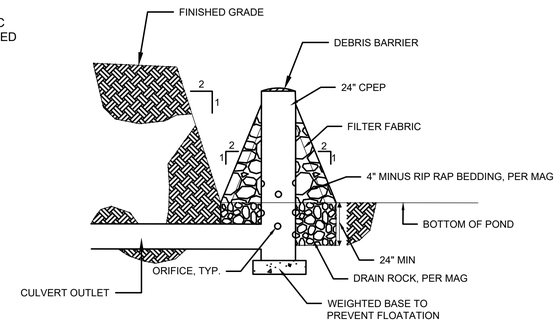

27 C504 DETAIL - GRAVEL CONE WITH RISER
NTS

CITY OF PHOENIX PUBLIC WORKS DEPARTMENT
SOLID WASTE ACCESS AND CONTAINMENT
STANDARD DETAILS

APPROVAL: Ginger Spence 12/1/17
PUBLIC WORKS DIRECTOR DATE PAGE 2 OF 3

CONTAINMENT:

1. TRASH AND RECYCLING BIN AREA SHALL BE SCREENED WITH A MINIMUM 6'-0" MASONRY WALL PER FIGURE C AND FIGURE D. EXTERIOR FINISH OF WALLS SHALL BE ARCHITECTURALLY INTEGRATED WITH PRIMARY BUILDING.
2. ALL ENCLOSURES SHALL HAVE GATES THAT SCREEN THE BINS FROM PUBLIC VIEW. GATES SHALL BE INSTALLED TO PROVIDE A NET ENCLOSURE OPENING OF 12'-0" PER BIN. GATES, HINGES AND MOUNTING HARDWARE SHALL NOT PROJECT INTO MINIMUM NET ENCLOSURE OPENING. DOUBLE OR TRIPLE WIDE ENCLOSURES NEED NOT HAVE A DEMISING WALL BETWEEN BINS, BUT MUST MAINTAIN REQUIRED NET CLEAR OPENING WIDTH FOR EACH BIN TO BE SERVED. (FIGURES C AND F)
3. GATES, HINGES, MOUNTING HARDWARE, AND SAFETY POSTS SHALL BE INSTALLED SO THERE IS A MINIMUM 9'-0" DEPTH CREATED IN THE ENCLOSURE. (FIGURE C)
4. PROVIDE A 3'-0" PEDESTRIAN ACCESS GATE INTO ENCLOSURE. GATE MAY BE LOCKABLE. (FIGURE C)
5. ENCLOSURE GATE SHALL HAVE DROP PINS INSTALLED AND HOLES DRILLED IN THE CONCRETE AT OPEN AND CLOSED POSITIONS.
6. BIN ENCLOSURES SHALL HAVE TWO 4" DIA. STEEL SAFETY POSTS INSTALLED IN THE BACK OF THE ENCLOSURE. SAFETY POSTS SHALL HAVE A MINIMUM HEIGHT OF 6'-0" OR BE EQUAL TO THE HEIGHT OF THE BACK SCREEN WALL OF THE ENCLOSURE. SAFETY POSTS SHALL BE PLACED A MINIMUM OF 4" FROM THE WALL. (FIGURES C AND E)
7. USE CLASS "A" CONCRETE EXCEPT AS NOTED IN SAFETY POST DETAIL FIGURE E.
8. STEEL REINFORCEMENT SHALL BE GRADE 40.
9. EXPANSION JOINT FILLER SHALL BE ½" BITUMINOUS TYPE PREFORMED EXPANSION JOINT FILLER ASTM D-1751.
10. SOIL BELOW THE WALL FOOTER AND CONCRETE PAD SHALL BE COMPACTED TO A DEPTH OF 6 INCHES AND TO A MINIMUM DRY DENSITY OF 90% IN ACCORDANCE WITH ASTM D-2922 AND D-3017, AFTER ADJUSTMENT FOR ROCK CORRECTION.
11. SITE APPURTANCES SUCH AS LANDSCAPING CONTROL BOXES AND LIGHTING MAY BE PLACED ON THE OUTSIDE OF THE ENCLOSURE WALLS.

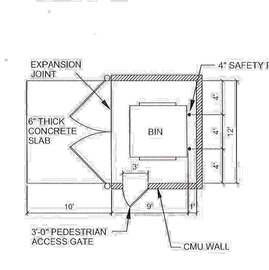

FIGURE C

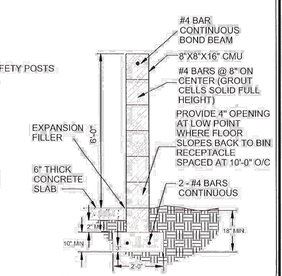

FIGURE D

CITY OF PHOENIX PUBLIC WORKS DEPARTMENT
SOLID WASTE ACCESS AND CONTAINMENT
STANDARD DETAILS

APPROVAL: Ginger Spence 12/1/17
PUBLIC WORKS DIRECTOR DATE PAGE 3 OF 3

USE SPECIFIC REQUIREMENTS:

1. RESTAURANTS MUST PROVIDE A SEPARATE ENCLOSED AREA TO ACCOMMODATE THEIR GREASE TRAP. THIS DESIGNATED AREA MUST NOT INTERFERE WITH TRASH/RECYCLING COLLECTION.
2. MULTIFAMILY DEVELOPMENT SOLID WASTE REQUIREMENT IS ¾ CUBIC YARD PER DWELLING UNIT SERVICED TWICE PER WEEK.
3. THE CITY OF PHOENIX REQUIRES RECYCLING CAPACITY FOR NEW MULTIFAMILY DEVELOPMENTS.
4. IN ORDER TO PROVIDE DESIGN FLEXIBILITY AND TO HELP REDUCE CONTAMINATION OF THE RECYCLE BIN, MULTIFAMILY DEVELOPMENTS MAY CHOSE THE LOCATION, CAPACITY, SIZE, SCOPE AND MANNER IN WHICH TO PROVIDE SERVICE.
5. COMPACTORS CAN BE USED IN DEVELOPMENTS WHERE THE EMPLOYEES LOAD AND ACTIVATE THE COMPACTING EQUIPMENT. DEVELOPMENTS THAT ALLOW CUSTOMERS OR RESIDENTS ACCESS TO THE COMPACTING EQUIPMENT WILL NOT BE APPROVED. CITY OF PHOENIX ALLOWS A 3:1 COMPACTION RATE. GREATER COMPACTION RATES REQUIRE CASE BY CASE APPROVAL BASED ON MANUFACTURER'S SPECIFICATIONS. COMPACTION EQUIPMENT SHALL BE SCREENED TO THE HIGHEST POINT OF THE EQUIPMENT.

USE SPECIFIC RECOMMENDATIONS:

1. CITY OF PHOENIX RECOMMENDS PROVIDING RECYCLING CAPACITY EQUAL TO REQUIRED SOLID WASTE CAPACITY FOR COMMERCIAL DEVELOPMENTS AND MULTIFAMILY DEVELOPMENTS.
2. COMMERCIAL PROPERTIES SHOULD BE DESIGNED TO PROVIDE A REFUSE ENCLOSURE FOR EVERY 20,000 SQUARE FEET OF BUILDING SPACE.
3. RESTAURANTS WHICH ARE DESIGNED ON A SINGLE PAD SHOULD HAVE A MINIMUM OF ONE REFUSE ENCLOSURE.

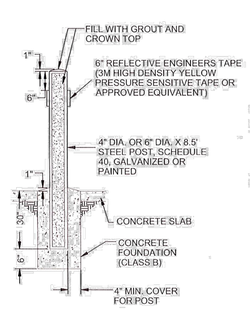

FIGURE E

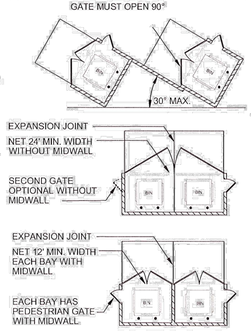

FIGURE F

28 C504 DETAIL - SOLID WASTE ACCESS AND CONTAINMENT
NTS

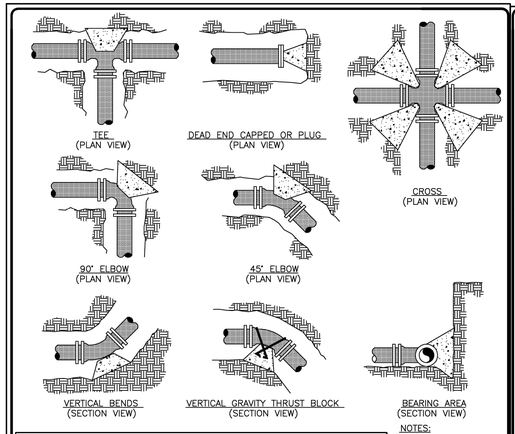

MINIMUM BEARING AREAS IN SQUARE FEET				
PIPE SIZE	TEE & PLUG	90° ELBOW	45° OR 22 1/2° ELBOW	CROSS
2"	0.5	0.5	0.5	0.5
4"	1.5	2.0	1.5	1.0
6"	3.0	4.5	2.5	2.0
8"	5.0	7.5	4.0	4.0
10"	8.0	11.0	6.5	5.5
12"	11.0	15.5	9.0	8.0
14"	15.0	21.0	12.0	10.5
16"	19.0	27.0	15.5	13.5
18"	24.0	34.0	19.0	17.0

NOTES:

1. DO NOT COVER GASKETED JOINTS AND NUTS/BOLTS.

SHEET 1 OF 2

DESIGNED BY:	NTUA
SURVEYED BY:	
DRAWN BY:	NTUA
APPROVED BY:	NTUA
DATE:	04/08
PROJECT NO:	
SCALE:	NTS
ACAD FILENAME:	Water Standard
DWG. NO.	WS-19a.DWG

NAVAJO TRIBAL UTILITY AUTHORITY
GRAVITY/THRUST BLOCK DETAILS

REVISIONS		
No.	Date	Brief	By
01	04/08	Revised	L.R.
02			
03			
04			
05			
06			

GRAVITY THRUST BLOCK
(ALSO TO BE USED IN UNSTABLE TRENCH CONDITIONS)
RESULTANT THRUST IN POUNDS OF FITTINGS AT 100 PSI WATER PRESSURE

TOTAL POUNDS					
PIPE SIZE	DEAD END	90° ELBOW	45° ELBOW	22 1/2° ELBOW	11 1/4° ELBOW
3"	1,232	1,742	943	481	241
4"	1,810	2,559	1,385	706	355
6"	3,739	5,288	2,862	1,459	733
8"	6,433	9,097	4,923	2,510	1,261
10"	9,677	13,685	7,406	3,776	1,897
12"	13,685	19,353	10,474	5,340	2,683
14"	18,385	26,001	14,072	7,174	3,604
16"	23,799	33,628	18,199	9,278	4,661
18"	29,865	42,235	22,858	11,653	5,855
20"	36,644	51,822	28,046	14,298	7,183
24"	52,279	73,934	40,013	20,398	10,249
30"	80,425	113,738	61,554	31,380	15,766
36"	115,209	162,931	88,177	44,952	22,585
42"	155,528	219,950	119,036	60,684	30,489
48"	202,683	286,637	155,127	79,083	39,733
54"	260,214	367,999	199,160	101,531	51,011
60"	298,121	421,606	228,172	116,321	58,442
64"	338,707	479,004	259,235	132,157	66,398

NOTES:

1. THE THRUST (IN TOTAL POUNDS) IN THE CHART IS BASED ON DUCTILE IRON OUTSIDE DIAMETER PIPE DIMENSION. SURGES SHOULD BE CONSIDERED AT TWICE THE NORMAL OPERATING PRESSURE. THE VOLUME OF THE GRAVITY THRUST BLOCK IS BASED ON CONCRETE AT 150 LBS./FT3.
2. TO OBTAIN VOLUME OF CONCRETE REQUIRED, USE:
   VOLUME OF CONRETE(FT3)= THRUST(LBS.) x SYSTEM PRESSURE(PSI)/100 PSI // 150 LBS./FT3.

   E.G.: CALCULATE THE VOLUME OF THE GRAVITY THRUST BLOCK FOR AN 8" x 45° BEND AT AN OPERATING PRESSURE OF 80 PSI.

   ANSWER: 4923 LBS. x 160 PSI/100 PSI DIVIDED BY 150 LBS./CUBIC FT. = 52.5 CUBIC FEET OR 2 CUBIC YARDS.

SHEET 2 OF 2

DESIGNED BY:	NTUA
SURVEYED BY:	
DRAWN BY:	NTUA
APPROVED BY:	NTUA
DATE:	04/08
PROJECT NO:	
SCALE:	NTS
ACAD FILENAME:	Water Standard
DWG. NO.	WS-19a.DWG

NAVAJO TRIBAL UTILITY AUTHORITY
GRAVITY/THRUST BLOCK CHART

REVISIONS		
No.	Date	Brief	By
01	04/08	Revised	L.R.
02			
03			
04			
05			
06			

29 C504 DETAIL - NTUA GRAVITY THRUST BLOCK
NTS

Contact Arizona 811 at least two full working days before you begin excavation
ARIZONA811
Call 811 or click Arizona811.com

JSRa
JOHNSON SMITTHIPONG & ROSAMOND ASSOCIATES, INC.
5210 E Williams Cir ● Ste 600 ● Tucson, AZ 85711
(520) 547-7904 ● www.jsrarchinc.com

Consultants:

DOWL
WWW.DOWL.COM
4686 East Van Buren Street, Suite 175
Phoenix, Arizona 85008
480-753-0800

iHOUSE APARTMENT PROJECT

INDIAN ROUTE 6290,
TONALEA, AZ 86044

U. S. DEPARTMENT OF HEALTH AND HUMAN SERVICES
INDIAN HEALTH SERVICE
NAVAJO AREA OFFICE

No.	Date	Description

Issue Date: 08/13/2024
Project No: 23-390
Scale: AS SHOWN
Drawn By: GSS
Checked By: SC

PHASE IV (FINAL CD)

Sheet Title:

DETAILS

Sheet Number:

C504

GENERAL STRUCTURAL NOTES

(APPLY UNLESS NOTED OTHERWISE)

DESIGN CRITERIA:

2018 EDITION OF THE INTERNATIONAL BUILDING CODE, WITH LOCAL AMENDMENTS.
RISK CATEGORY II.

LOADS:

ROOF LIVE LOAD = 20 PSF.
SUPERIMPOSED DEAD LOAD ON ROOF TRUSSES & JOISTS = 15 PSF. NET WIND UPLIFT = 8 PSF.
GROUND SNOW LOAD = 15 PSF. FLAT ROOF SNOW LOAD = 15 PSF. Ce = 1.0.
Is = 1.0. Ct = 1.0.
WIND DESIGN: ULTIMATE WIND SPEED(Vult) = 115 MPH (3 SECOND GUST), NOMINAL DESIGN WIND SPEED (Vasd) = 90 MPH. EXPOSURE C.
INTERNAL PRESSURE COEFFICIENT (GCpi) = +-0.18. C&C = +-25.6 PSF FOR ZONE 4 REGIONS PER ASCE 7-16.
SEISMIC DESIGN: Ie = 1.0. Ss = 0.243. S1 = 0.071. SOIL SITE CLASS = D.
Sds = 0.259. SD1 = 0.114. SEISMIC DESIGN CATEGORY B. LIGHT FRAME (WOOD) WALL SHEATHED WITH GWB PANELS AND WOOD STRUCTURAL PANEL SHEAR WALLS.
Cs = 0.039, R = 6.5, Vbase = 18.3k.
EQUIVALENT LATERAL FORCE PROCEDURE.

LATERAL LOADS INDICATED ARE INTENDED FOR ULTIMATE LIMIT STATES PER ASCE 7-16.

GENERAL:

1. THE STRUCTURAL CONSTRUCTION DOCUMENTS REPRESENT THE FINISHED STRUCTURE. THEY DO NOT INDICATE THE METHOD OR SEQUENCE OF CONSTRUCTION. THE CONTRACTOR SHALL BE RESPONSIBLE FOR AND PROVIDE ALL MEASURES NECESSARY TO PROTECT THE STRUCTURE DURING CONSTRUCTION. SUCH MEASURES SHALL INCLUDE, BUT NOT BE LIMITED TO, BRACING, SHORING FOR LOADS DUE TO CONSTRUCTION EQUIPMENT, ETC. THE STRUCTURAL ENGINEER SHALL NOT BE RESPONSIBLE FOR THE CONTRACTOR'S MEANS, METHODS, TECHNIQUES, SEQUENCES FOR PROCEDURE OF CONSTRUCTION, OR THE SAFETY PRECAUTIONS AND THE PROGRAMS INCIDENT THERETO (NOR SHALL OBSERVATION VISITS TO THE SITE INCLUDE INSPECTION OF THESE ITEMS). THE CONTRACTOR SHALL BE RESPONSIBLE FOR THE DESIGN AND IMPLEMENTATION OF ALL SCAFFOLDING, BRACING AND SHORING.

2. CONSTRUCTION MATERIALS SHALL BE SPREAD OUT IF PLACED ON FRAMED CONSTRUCTION. LOAD SHALL NOT EXCEED THE DESIGN LIVE LOAD PER SQUARE FOOT.

3. WHERE REFERENCE IS MADE TO VARIOUS TEST STANDARDS FOR MATERIALS, SUCH STANDARDS SHALL BE THE LATEST EDITION AND/OR ADDENDA.

4. ESTABLISH AND VERIFY ALL OPENINGS AND INSERTS FOR ARCHITECTURAL, MECHANICAL, PLUMBING AND ELECTRICAL WITH APPROPRIATE TRADES, DRAWINGS AND SUBCONTRACTORS PRIOR TO CONSTRUCTION.

5. OPTIONS ARE FOR CONTRACTOR'S CONVENIENCE. IF AN OPTION IS CHOSEN, THE CONTRACTOR SHALL BE RESPONSIBLE FOR ALL NECESSARY CHANGES AND SHALL COORDINATE ALL DETAILS WITH ALL TRADES.

6. NOTES AND DETAILS ON DRAWINGS SHALL TAKE PRECEDENCE OVER GENERAL STRUCTURAL NOTES AND TYPICAL DETAILS. WHERE NO DETAILS ARE SHOWN, CONSTRUCTION SHALL CONFORM TO SIMILAR WORK ON THE PROJECT. FOR BIDDING PURPOSES, WHERE ANY MEMBER IS SHOWN BUT NOT CALLED OUT, THE LARGEST SIMILAR MEMBER SHALL BE UTILIZED.

7. CONTRACTOR SHALL BE RESPONSIBLE FOR VERIFICATION OF ALL DIMENSIONS WITH ARCHITECTURAL DRAWINGS PRIOR TO START OF CONSTRUCTION. RESOLVE ANY DISCREPANCY WITH THE ARCHITECT. DO NOT USE SCALED DIMENSIONS.

8. ALL DETAILS SHALL BE INCORPORATED INTO THE PROJECT AT ALL APPROPRIATE LOCATIONS, WHETHER SPECIFICALLY CUT OR NOT. TYPICAL DETAILS MAY NOT NECESSARILY BE CUT ON PLANS, BUT APPLY UNLESS NOTED OTHERWISE. FOR CLARITY, DETAILS MAY SHOW ONLY ONE SIDE OF FRAMING CONDITION.

9. WHERE DISCREPANCIES OCCUR BETWEEN PLANS, DETAILS, GENERAL STRUCTURAL NOTES AND SPECIFICATIONS, THE GREATER REQUIREMENTS SHALL GOVERN.

10. ANY ENGINEERING DESIGN, PROVIDED BY OTHERS AND SUBMITTED FOR REVIEW, SHALL BEAR THE SEAL OF AN ENGINEER REGISTERED IN THE STATE IN WHICH THE PROJECT OCCURS.

FOUNDATIONS:

1. FOUNDATION DESIGN IS BASED UPON GEOTECHNICAL EXPLORATION REPORT BY ATEK ENGINEERING CONSULTANTS; PROJECT NO. 240012 AND ALL SUPPLEMENTS. ALL CONSTRUCTION SHALL CONFORM TO THE REQUIREMENTS OF THE GEOTECHNICAL EXPLORATION REPORT. DESIGN SOIL BEARING VALUE = 1,250 PSF AT GRADE AND 2,500 PSF AT 2'-6" BELOW LOWEST ADJACENT FINISHED GRADE. (FROST DEPTH IS 2'-6" BELOW LOWEST ADJACENT FINISHED GRADE.)
2. PROVIDE POSITIVE DRAINAGE SLOPES, BOTH DURING AND AFTER CONSTRUCTION, FOR SURFACE AND ROOF RUNOFF. THERE SHALL BE A MINIMUM OF 10'-0" OF POSITIVE DRAINAGE FROM BUILDING FOUNDATIONS.
3. THE STRUCTURAL ENGINEER IS NOT RESPONSIBLE FOR ANY GEOTECHNICAL ASPECTS OF THIS PROJECT. THE CONTRACTOR SHALL EMPLOY A REGISTERED GEOTECHNICAL ENGINEER TO PERFORM NECESSARY TESTING AND QUALITY CONTROL INSPECTIONS TO ENSURE THAT THE REQUIREMENTS OF THE SOILS REPORT ARE COMPLIED WITH. ALL EARTHWORK SHALL BE INSPECTED AND APPROVED BY THE GEOTECHNICAL ENGINEER.
4. FOR CLARITY, ALL EXTERIOR SLABS AND SIDEWALKS MAY NOT BE SHOWN. FOR EXACT DIMENSIONS, LOCATIONS, JOINT AND SLOPE LINES, ETC. SEE ARCHITECTURAL DRAWINGS.

CONCRETE:

1. ALL CONCRETE WORK SHALL CONFORM WITH THE REQUIREMENTS OF ACI 301 AND ACI 318. CEMENT PER ASTM C150, TYPE V. AGGREGATE PER ASTM C33. CONCRETE SHALL BE READY MIXED IN ACCORDANCE WITH ASTM C94 AND SHALL BE DESIGNED FOR A MINIMUM 28 DAY COMPRESSIVE STRENGTH AS FOLLOWS:

   SLABS ON GRADE ----------4,000 PSI
   FOUNDATIONS ----------4,000 PSI*
   * DESIGNED FOR 2500 PSI

2. FLY ASH - SHALL CONFORM TO ASTM C618, CLASS F AND SHALL BE LIMITED TO 25% OF CEMENTITIOUS MATERIALS AND SHALL HAVE A REPLACEMENT FACTOR OF 1.2 RELATIVE TO CEMENT REPLACED. CONCRETE SHALL BE FREE OF CHLORIDE. MAXIMUM SLUMP 4 1/2" FOR CONCRETE WITHOUT PLASTICIZER. IF PLASTICIZER IS USED, AN 8" MAXIMUM SLUMP IS ALLOWED AT PLACEMENT. ALL MIX DESIGNS SHALL BE DESIGNED BY THE CONCRETE PRODUCTION FACILITY IN ACCORDANCE WITH ACI 301 AND SHALL BE REVIEWED BY THE STRUCTURAL ENGINEER PRIOR TO PLACEMENT. MIX DESIGNS FOR POST-TENSIONING CONCRETE SHALL BE PROPORTIONED SO AS TO MINIMIZE SHRINKAGE CRACKING.
3. MECHANICALLY VIBRATE ALL CONCRETE WHEN PLACED, EXCEPT THAT SLABS ON GRADE NEED BE VIBRATED ONLY AROUND UNDER-FLOOR DUCTS, ETC. DO NOT DROP CONCRETE MORE THAN FIVE FEET WITH OUT THE USE OF TREMIES. REVIBRATE TOPS OF CAISSONS 15 MINUTES AFTER PLACING CONCRETE. UNLESS APPROVED OTHERWISE IN WRITING BY THE ARCHITECT, ALL CONCRETE SLABS ON GRADE SHALL BE BOUND BY CONTROL JOINTS (KEYED OR SAW CUT), AS SHOWN ON THE FOUNDATION PLAN, SUCH THAT THE ENCLOSED AREA DOES NOT EXCEED 225 SQUARE FEET. KEYED CONTROL JOINTS NEED ONLY OCCUR AT EXPOSED EDGES DURING POURING, ALL OTHER JOINTS MAY BE SAW CUT. CAST CLOSURE POUR AROUND COLUMNS AFTER COLUMN DEAD LOAD IS APPLIED.
4. PROVIDE SLEEVES FOR ALL UTILITY OPENINGS. DO NOT CUT ANY REINFORCING AT OPENINGS. CONCRETE WHICH HAS CONTAINED WATER FOR MORE THAN 90 MINUTES (60 MINUTES IF AIR TEMPERATURE EXCEEDS 85 DEGREES) SHALL NOT BE USED. RETEMPERING OF CONCRETE AFTER INITIAL SET IS NOT ALLOWED. CURE EXPOSED CONCRETE PER ACI 301 FOR A MINIMUM OF 7 DAYS.
5. TESTING OF COMPRESSIVE STRENGTH AND SLUMP PER ASTM C31, C39 AND C143. PROVIDE A MINIMUM OF 4 CYLINDERS (4 FOR 4"X 8" CYLINDERS) FOR EACH DAY'S PLACEMENT U.N.O. A QUALIFIED TESTING LABORATORY SHALL TEST ONE CYLINDER AT 7 DAYS AND TWO (THREE FOR 4" X 8" CYLINDERS) AT 28 DAYS. SEE SPECIFICATIONS FOR ADDITIONAL REQUIREMENTS.
6. MACRO FIBER - HIGH VOLUME SYNTHETIC FIBER MAY BE SUBSTITUTED AT A RATE OF 4 POUNDS PER CUBIC YARD OF CONCRETE FOR WELDED WIRE FABRIC IN SLABS ON GRADE AND SLABS ON METAL DECK. ACCEPTABLE PRODUCTS INCLUDE GRACE STRUX 90/40, PROPEX FIBERMESH 650, EUCLID TUF-STRAND SF, FORTA FERRO.
7. SYNTHETIC FIBERS SHALL BE 100% VIRGIN POLYPROPYLENE, COMPLYING WITH ASTM C-1116, FIBRILLATED FIBERS CONTAINING NO REPROCESSED OLEFIN MATERIALS AND SPECIFICALLY MANUFACTURED TO AN OPTIMUM GRADATION UTILIZING 25 INDIVIDUAL FIBER DESIGNS FOR USE AS CONCRETE SECONDARY REINFORCEMENT. MIX AT A RATE OF 1.5 POUNDS PER CUBIC YARD. SYNTHETIC FIBERS SHALL BE MANUFACTURED BY PROPEX, FORTA ECONONET, OR EQUIVALENT.

POST-TENSIONED SLAB ON GRADE:

1. POST-TENSIONED SLAB DESIGN CRITERIA:

   BRAB TYPE 2 SLAB

   DESIGN BASED ON STABLE SOIL CONDITIONS WITH REQUIREMENTS FOR DESIGN BASED ON IBC SECTION 1805.8. DESIGN SHALL NOT BE USED WITHOUT CONSIDERATION OF POTENTIAL SOIL MOVEMENT.

2. POST-TENSIONING REINFORCING SHALL BE 1/2" DIAMETER WITH A MINIMUM CROSS SECTIONAL AREA OF 0.153 IN^2, 7-WIRE STRANDS CONFORMING TO THE FOLLOWING:

   POST-TENSIONING TENDON MATERIAL ---------- LOW RELAXATION
   ASTM DESIGNATION ---------- A416
   ULTIMATE STRENGTH ---------- --- 270 KSI
   MODULUS OF ELASTICITY ---------- 28000 KSI

3. ANCHORAGE HARDWARE FOR POST-TENSIONING TENDONS SHALL BE MONOSTRAND TYPE ANCHOR SYSTEM WITH CURRENT ICBO APPROVAL USING A DUCTILE IRON CASTING OF AT LEAST 2.25 INCHES BY 4.5 INCHES OF BEARING. POCKET-FORMERS SHALL BE USED ON ALL STRESSING ENDS. THE POCKET-FORMER SHALL PROVIDE ADEQUATE CONCRETE COVERAGE FOR THE ANCHOR AS NOTED ON THE PLANS OR DETAILS. COATING POCKET-FORMERS WITH OIL OR SIMILAR MATERIALS FOR EASE OF REMOVAL IS ACCEPTABLE. ALL DEAD END ANCHORAGES SHALL BE SHOP FABRICATED, PRESEATED WEDGES. FABRICATION AND MANUFACTURE OF THE UNBONDED SYSTEM SHALL BE IN ACCORDANCE WITH THE GUIDE SPECIFICATIONS AS OUTLINED BY THE POST-TENSIONING INSTITUTE.
4. THE CONTRACTOR SHALL BE RESPONSIBLE FOR EMBEDDED HARDWARE, ANCHOR BOLTS, HOLDOWNS, POST BASES, ETC. ITEMS NOT SPECIFICALLY DIMENSIONED ON THE PLANS SUCH AS INTERIOR SHEAR WALLS, POSTS, HOLDOWNS, ETC. SHALL BE LOCATED ACCORDING TO APPROVED ARCHITECTURAL PLANS AND DETAILS.
5. INTERIOR TENDON LOCATIONS (AWAY FROM EDGE OF SLAB OR OPENING) ARE TO BE PLACED AT THE APPROXIMATE LOCATION DIMENSIONED ON PLAN. TENDONS MAY BE MOVED LATERALLY A MAXIMUM OF 6 INCHES FROM GIVEN DIMENSIONS TO AVOID EMBEDS, BLOCKOUTS, ETC. TENDON LOCATIONS NOT DIMENSIONED ON PLANS SHALL BE PLACED AT APPROXIMATELY EQUAL SPACES BETWEEN DIMENSIONED CONTROL POINTS.
6. ALL TENDON OVERLAPS SHALL BE CENTERED IN DEPTH OF CONCRETE SLAB UNLESS NOTED OTHERWISE.
7. REMOVE PLASTIC TENDON SHEATHING WITHIN 1 INCH OF BACK OF ANCHOR. SECURE THE DEAD ENDS AND STRESSING ENDS TO FORM BOARDS WITH NAILS. PROVIDE PROPER CONCRETE COVERAGE PER DEAD END ANCHORAGE DETAILS.
8. SECURE ALL TENDONS AT EACH INTERSECTION WITH THE APPROPRIATE CHAIR OR DOBIE BLOCKS. PLASTIC CHAIRS WHICH PROVIDE SADDLE OR SIDE CLIPS FOR THE TENDONS NEED ONLY BE TIED AT EVERY THIRD TENDON INTERSECTION. DOBIE BLOCK OR OTHER CHAIRS WHICH ALLOW TENDONS TO MOVE LATERALLY SHALL BE TIED AT EACH TENDON INTERSECTION. TIE ALL TENDON INTERSECTIONS AT THE PERIMETER OF THE SLAB.
9. PLACEMENT OF MILD STEEL REINFORCEMENT SHALL BE COORDINATED WITH PLACEMENT OF POST-TENSIONING TENDONS. PROPER TENDON PLACEMENT HAS PRIORITY.
10. CONCRETE CONTRACTOR SHALL ENSURE THAT WORKMEN EXERCISE GREAT CARE SO AS NOT TO DISTURB LOCATIONS OF TENDONS DURING CONCRETE PLACEMENT.
11. TENDON STRESSING MAY PROCEED WHEN THE CONCRETE STRENGTH OBTAINS 2000 PSI. STRESS SLABS AS EARLY AS POSSIBLE TO REDUCE SHRINKAGE CRACKS. PARTIALLY STRESS TENDONS, 25% OF TOTAL FORCE, WHEN CONCRETE REACHES 1000 PSI FOR ALL TENDONS THAT EXCEED 100 FEET IN LENGTH. ALL TENDON STRESSING SHALL COMPLY WITH PTI GUIDELINES. TENDONS SHALL BE STRESSED WITH A JACKING FORCE OF 33 KIPS.
12. CONTINUOUS INSPECTION IS REQUIRED DURING ALL POST-TENSION WORK.
13. RECORDS OF ALL JACKING FORCES AND ELONGATIONS SHALL BE KEPT BY A CERTIFIED POST TENSION INSPECTOR AND SHALL BE PROMPTLY SUBMITTED TO THE ARCHITECT AND STRUCTURAL ENGINEER. TENDON ENDS SHALL NOT BE CUT WITHOUT PRIOR APPROVAL OF THE STRUCTURAL ENGINEER THROUGH THE ARCHITECT.
14. ALL TENDON STRESSING OPERATIONS SHALL BE PERFORMED UNDER THE IMMEDIATE CONTROL OF A PERSON PROPERLY TRAINED AND EXPERIENCED IN POST-TENSIONING STRESSING OPERATIONS. ALL TENDONS SHALL BE STRESSED BY MEANS OF A HYDRAULIC JACK EQUIPPED WITH A RECENTLY CALIBRATED (WITHIN 6 MONTHS) PRESSURE GAUGE. EACH JACK SHALL BE ACCOMPANIED BY A CURRENT, CERTIFIED CALIBRATION CHART. TENDON STRESSING OPERATOR SHALL MAINTAIN RIGID CONTROL OF GAUGE PRESSURE READINGS AND ELONGATION MEASUREMENTS. MEASURED ELONGATION SHALL CORRESPOND TO THE CALCULATED ELONGATION BY PLUS OR MINUS 10 PERCENT. ANY DISCREPANCIES IN TENDON ELONGATION OR STRESSING OPERATIONS SHALL BE REPORTED TO THE ENGINEER BEFORE CUTTING THE STRESSING ENDS. ON TENDONS 25 FEET IN LENGTH OR LESS, GAUGE PRESSURE GOVERNS OVER ELONGATION, AND MAY EXCEED CALCULATED ELONGATION BY MORE THAN 7 PERCENT.
15. PIPES OTHER THAN ELECTRICAL CONDUITS SHALL NOT BE EMBEDDED IN STRUCTURAL CONCRETE EXCEPT WHERE SPECIFICALLY APPROVED BY THE ENGINEER.

REINFORCING STEEL:

1. REINFORCING STEEL SHALL CONFORM TO ASTM A615 (Fy = 60 KSI) DEFORMED BARS FOR ALL BARS #4 AND LARGER. ASTM A615 (Fy = 40 KSI) DEFORMED BARS FOR ALL BARS #3 AND SMALLER. ALL REINFORCING TO BE WELDED SHALL BE ASTM A706. WELDED WIRE FABRIC PER ASTM A185, WIRE PER ASTM A82. NO TACK WELDING OF REINFORCING BARS ALLOWED WITHOUT PRIOR REVIEW OF PROCEDURE WITH THE STRUCTURAL ENGINEER. LATEST ACI CODE AND DETAILING MANUAL APPLY.
2. ACCURATELY PLACE OR SUPPORT ALL REINFORCING, INCLUDING WELDED WIRE FABRIC, WITH GALVANIZED METAL CHAIRS, SPACERS OR HANGERS FOR THE FOLLOWING CLEAR CONCRETE COVERAGES:
   CAST AGAINST AND PERMANENTLY EXPOSED TO EARTH ------- 3"
   EXPOSED TO EARTH OR WEATHER
   #6 OR LARGER ---------- 2"
   #5 AND SMALLER ---------- 1 1/2"
   ALL OTHER PER LATEST EDITION OF ACI 318.
3. LAP SPLICES, UNLESS NOTED OTHERWISE, SHALL BE CLASS "B" TENSION LAP SPLICES PER LATEST EDITION OF ACI 318. LAP SPLICES IN CONCRETE COLUMNS SHALL BE STANDARD COMPRESSION LAP SPLICES. STAGGER SPLICES A MINIMUM OF ONE LAP LENGTH. LAPS IN WELDED WIRE FABRIC SHALL BE MADE SO THAT THE OVERLAP, MEASURED BETWEEN OUTERMOST CROSS WIRES OF EACH FABRIC SHEET, IS NOT LESS THAN THE SPACING OF CROSS WIRES PLUS 2 INCHES.
4. ALL SPLICE LOCATIONS SUBJECT TO APPROVAL BY THE STRUCTURAL ENGINEER. SPLICED BARS SHALL BE PLACED AT THE SAME EFFECTIVE DEPTH U.N.O. ALL REINFORCING NOTED AS "CONTINUOUS" SHALL BE FULLY CONTINUOUS AND SPLICED. PROVIDE BENT CORNER BARS TO MATCH AND LAP WITH HORIZONTAL BARS AT ALL CORNERS AND INTERSECTIONS PER TYPICAL DETAILS.
5. REINFORCING BAR SPACING GIVEN ARE MAXIMUM ON CENTERS. ALL BARS PER CRSI SPECIFICATIONS AND HANDBOOK. DOWEL ALL VERTICAL REINFORCING TO FOUNDATION WITH STANDARD 90 DEGREE HOOKS UNLESS NOTED OTHERWISE. SKEW HOOKS AS REQUIRED TO MAINTAIN CONCRETE COVER. SECURELY TIE ALL BARS IN LOCATION BEFORE PLACING CONCRETE. CONCRETE COLUMN DOWEL EMBEDMENT SHALL BE A STANDARD COMPRESSION DOWEL WITH EMBEDMENT LENGTH ACCORDING TO THE LATEST EDITION OF THE ACI 318.

LOW VELOCITY POWDER ACTUATED FASTENERS (P.A.F.):

1. LOW VELOCITY P.A.F. SHALL BE HILTI X-U FASTENERS WITH A MINIMUM SHANK DIAMETER OF .157" INSTALLED AND COMPLYING WITH ICC ES REPORT NO. 2269 OR EQUIVALENT.

POST-INSTALLED ANCHORS:

1. EPOXY BOLTS OR DOWELS SHALL BE A THREADED ROD OR REINFORCING STEEL INSTALLED WITH THE ONE OF THE FOLLOWING APPROVED PRODUCTS SATISFYING CRACKED CONCRETE REQUIREMENTS IN ACCORDANCE WITH ACI APPENDIX D.

   SIMPSON "SET-XP" ICC REPORT ESR-2508
   HILTI "RE-500 SD" ICC REPORT ESR-2322
   HILTI "HIT-HY 200 SAFE SET"ICC REPORT ESR-3187
   POWERS "PE1000+" ICC REPORT ESR-2583

2. EXPANSION BOLTS OR SCREW BOLTS FOR MASONRY SHALL BE ONE OF THE FOLLOWING APPROVED PRODUCTS.

   HILTI "KWIK BOLT III" ICC REPORT ESR-1385
   HILTI "KWIK HUS EZ" ICC REPORT ESR-3056
   SIMPSON "TITEN HD" ICC REPORT ESR-1056
   SIMPSON "WEDGE-ALL" ICC REPORT ESR_1396
   POWERS "WEDGE BOLT+" ICC REPORT ESR-1678

3. EXPANSION BOLTS FOR CONCRETE SHALL BE ONE OF THE FOLLOWING APPROVED PRODUCTS SATISFYING CRACKED CONCRETE REQUIREMENTS IN ACCORDANCE WITH ACI APPENDIX D.

   HILTI "KWIK BOLT TZ" ICC REPORT ESR-1917
   HILTI "HDA UNDERCUT ANCHOR" ICC REPORT ESR-1546
   HILTI "HSL-3 HD EXPANSION ANCHOR" ICC REPORT ESR-1545
   SIMPSON "STRONG BOLT WEDGE ANCHOR" ICC REPORT ESR-1771
   SIMPSON "STRONG BOLT 2 WEDGE ANCHOR" ICC REPORT ESR-3037
   SIMPSON "TORQ-CUT" ICC REPORT ESR-PENDING
   POWERS "POWER-STUD+ SD1" ICC REPORT ESR-2818
   POWERS "POWER-STUD+ SD2" ICC REPORT ESR-2502

4. SCREW BOLTS FOR CONCRETE SHALL BE ONE OF THE FOLLOWING APPROVED PRODUCTS SATISFYING CRACKED CONCRETE REQUIREMENTS IN ACCORDANCE WITH ACI APPENDIX D.

   SIMPSON "TITEN HD" ICC REPORT ESR-2713
   POWERS "WEDGE BOLT+" ICC REPORT ESR-2526

5. ANCHORS POST INSTALLED OR CAST-IN PLACE IN CONCRETE SHALL BE ONE OF THE FOLLOWING APPROVED PRODUCTS SATISFYING CRACKED CONCRETE REQUIREMENTS IN ACCORDANCE WITH ACI APPENDIX D.

   HILTI "KWIK HUS EZ-1" ICC REPORT ESR-3027
   HILTI "HCI-WF"
   HILTI "HCI-MD"
   POWERS "SNAKE+ ANCHOR" ICC REPORT ESR-2272
   SIMPSON "BLUE BANGER HANGER"
   SIMPSON "TITEN HD THREADED ROD HANGER" ICC REPORT ESR-2713
   POWERS "WOOD-KNOCKER"
   POWERS "BANG-IT"

6. THE CONTRACTOR MAY NOT USE SUBSTITUTES FOR EPOXY OR EXPANSION ANCHORS WITHOUT PRIOR APPROVAL OF THE STRUCTURAL ENGINEER.
7. FOR MINIMUM EMBEDMENT LENGTH SEE DETAIL 07. INSTALL ALL BOLTS AS OUTLINED IN MANUFACTURER'S SPECIFICATIONS, UTILIZING PROPER SIZE AND TYPE OF DRILL, CLEANING HOLE, DRIVING AND TIGHTENING BOLT.
8. SPECIAL INSPECTION OF ALL POST-INSTALLED ANCHORS IS REQUIRED.
9. AT POST-TENSIONED SLAB TAKE PRECAUTIONS NOT TO DAMAGE POST-TENSIONED CABLES DURING INSTALLATION OF POST-INSTALLED ANCHORS.

ROUGH CARPENTRY AND WOOD STRUCTURAL PANELS:

1. ALL FRAMING PER IBC CHAPTER 23. FRAMING LUMBER SHALL COMPLY WITH THE 2005 EDITION OF THE NATIONAL DESIGN SPECIFICATION. MAXIMUM MOISTURE CONTENT SHALL NOT EXCEED 19%. ALL SAWN LUMBER SHALL BE STAMPED WITH THE GRADE MARK OF AN APPROVED LUMBER GRADING AGENCY. ALL SAWN LUMBER SHALL BE DOUGLAS FIR-LARCH WITH THE FOLLOWING MINIMUM PROPERTIES:

   WOOD TYPE

   JOISTS
   2 X 6 OR LARGER ---------- D.F. #2

   BEAMS, LEDGERS AND TOP PLATES
   WIDTH 4" OR LESS ---------- D.F. #2
   WIDTH GREATER THAN 4" ---------- D.F. #1

   STUDS, PLATES AND BLOCKING
   2 X 4 ---------- D.F. #2
   2 X 6 OR LARGER ---------- D.F. #2

   POSTS
   4 X 4 ---------- D.F. #2
   4 X 6 OR LARGER ---------- D.F. #2
   6 X 6 OR LARGER ---------- D.F. #1

2. ALL WOOD STRUCTURAL PANELS SHALL CONFORM TO DOC PS-1 OR PS-2 STANDARDS, SHALL HAVE AN EXTERIOR OR EXPOSURE 1 CLASSIFICATION AND SHALL BEAR THE STAMP OF AN APPROVED TESTING AGENCY. WHERE PLYWOOD IS USED, LAY UP PLYWOOD WITH FACE GRAIN PERPENDICULAR TO SUPPORTS AND STAGGER JOINTS. ON ROOFS WHERE PLYWOOD IS LAID UP WITH FACE GRAIN PARALLEL TO SUPPORTS, USE A MINIMUM OF 5-PLY PLYWOOD. AT SHEARWALLS, PROVIDE 2X BLOCKING AT ALL UNSUPPORTED EDGES. ALL NAILING, COMMON NAILS . WHERE SCREWS ARE INDICATED FOR WOOD TO WOOD ATTACHMENTS, USE WOOD SCREWS. ALL WOOD STRUCTURAL PANELS SHALL BE OF THE FOLLOWING NOMINAL THICKNESS, SPAN/INDEX RATIO AND SHALL BE ATTACHED AS FOLLOWS UNLESS NOTED OTHERWISE:

USE	THICKNESS	SPAN/INDEX RATIO	EDGE ATTACHMENT	INTERMEDIATE ATTACHMENT
ROOF	5/8"	32/16	10d AT 6" O.C.	10d AT 12" O.C.
SHEAR WALL	1/2"	24/0	8d AT 6" O.C. U.N.O.	8d AT 12" O.C. U.N.O.

3. DO NOT NOTCH, DRILL OR SPLICE JOISTS, BEAMS OR LOAD BEARING STUDS WITHOUT PRIOR APPROVAL OF THE STRUCTURAL ENGINEER THRU THE ARCHITECT.
4. STUD WALLS SHALL BE 2 X 6 AT 16" O.C. U.N.O. ON PLANS. BOTTOM PLATE ANCHOR BOLTS AT CONCRETE FOUNDATIONS SHALL BE 1/2" DIAMETER PLACED AT 4'-0" O.C. MAXIMUM U.N.O. ANCHOR BOLTS SHALL BE PLACED AT ALL JAMBS, CORNERS, INTERSECTIONS AND ENDS OF WALLS. ALL LUMBER ON CONCRETE OR MASONRY FOUNDATIONS SHALL BE PRESSURE TREATED WOOD STAMPED BY AN APPROVED AGENCY.
5. DOUBLE UP STUDS AT JAMBS AND AS REQUIRED UNDER BEAMS IN BEARING WALLS. EVERY OTHER STUD OF WOOD FRAME BEARING WALL SHALL HAVE A SIMPSON H3 ANCHOR TOP AND BOTTOM, EXCEPT AT THOSE WALLS WHERE PLYWOOD SHEATHING IS NAILED DIRECTLY TO THE TOP AND BOTTOM PLATES. PROVIDE 2 X SOLID BLOCKING AT MID-HEIGHT OF BEARING STUD WALLS.
6. ALL NAILING NOT NOTED SHALL BE ACCORDING TO TABLE 2304.9.1 OF THE INTERNATIONAL BUILDING CODE. ALL NAILS SHALL BE WITH COMMON NAILS. WOOD CONNECTORS SHALL BE AS MANUFACTURED BY SIMPSON STRONG-TIE COMPANY, INC. OR OTHER MANUFACTURER WITH CURRENT AND EQUIVALENT I.C.B.O. APPROVAL. ALL NAIL HOLES IN CONNECTORS SHALL BE FILLED WITH NAIL OF THE LARGEST SIZE INDICATED IN THE MANUFACTURER'S CATALOG U.N.O.
7. ALL FABRICATION SHALL BE PERFORMED ON THE PREMISES OF A FABRICATOR REGISTERED AND APPROVED TO PERFORM SUCH WORK WITHOUT SPECIAL INSPECTION.

PREFABRICATED WOOD TRUSSES:

1. THE TRUSS MANUFACTURER SHALL BE RESPONSIBLE FOR THE COMPLETE DESIGN, FABRICATION AND ERECTION PROCEDURES OF ALL TRUSSES, BRIDGING AND/OR BLOCKING PANELS, HANGERS, BRACING, ETC. FOR A COMPLETE INSTALLATION OF THE TRUSS SYSTEM. TRUSS CONFIGURATIONS ARE AS SHOWN ON THE DRAWINGS. ALL BRACING AND BRIDGING SIZES AND SPACINGS BY TRUSS MANUFACTURER IN ACCORDANCE WITH THE LATEST RECOMMENDATIONS OF THE TRUSS PLATE INSTITUTE.
2. TRUSSES SHALL BE DESIGNED AND FABRICATED IN ACCORDANCE WITH IBC CHAPTER 23 TO SUPPORT SELF WEIGHT PLUS LIVE LOAD, SUPERIMPOSED DEAD LOADS, AND LATERAL LOADS STATED IN THE GENERAL STRUCTURAL NOTES OR LOCATED ON PLANS. ROOF TRUSSES SHALL BE DESIGNED TO ACCOMMODATE A FUTURE MECHANICAL LOAD OF 300 POUNDS AT ANY LOCATION. THE UNIFORM LOADS DO NOT INCLUDE SPECIAL OR ADDITIONAL LOADS NOTED ON THE PLANS OR DETAILS. THE ROOF LOAD DURATION FACTOR IS 1.25.
3. FOR ROOF TRUSSES, LIMIT TOTAL LOAD DEFLECTIONS TO SPAN/240 AT SIMPLE SPANS U.N.O. LIMIT LIVE LOAD DEFLECTIONS TO SPAN/360 AT SIMPLE SPANS U.N.O. FOR FLOOR TRUSSES, LIMIT TOTAL LOAD DEFLECTIONS TO SPAN/360 AT SIMPLE SPANS U.N.O. LIMIT LIVE LOAD DEFLECTIONS TO SPAN/480 AT SIMPLE SPANS U.N.O. ALL TRUSSES SHALL BE CAMBERED FOR 1.5 TIMES THE DESIGN DEAD LOAD.
4. ADDITIONAL TRUSSES SHALL BE SUPPLIED AS REQUIRED TO SUPPORT MECHANICAL EQUIPMENT.
5. ALL CONNECTORS SHALL HAVE CURRENT I.C.B.O. APPROVAL. ALL TRUSS TO TRUSS CONNECTORS SHALL BE DESIGNED BY THE TRUSS MANUFACTURER. MULTIPLE TRUSS MEMBERS SHALL BE FASTENED TOGETHER TO ALLOW TRANSFER OF SHEAR AND TENSION FORCES (MINIMUM 200 PLF) AT PLYWOOD SHEATHING JOINTS AND TO PREVENT CROSS GRAIN BENDING OF TOP CHORDS. ATTACHMENT SHALL BE A CONTINUOUS 20 GAGE METAL PLATE OR OTHER APPROVED MEANS. METHOD OF ATTACHMENT SHALL BE INDICATED ON SHOP DRAWINGS FOR REVIEW.
6. TRUSS MEMBER PERMANENT BRACING. WHERE PERMANENT BRACING OF TRUSS MEMBERS IS REQUIRED ON THE TRUSS DESIGN DRAWINGS, IT SHALL BE ACCOMPLISHED BY THE FOLLOWING METHOD: THE TRUSSES SHALL BE DESIGNED SO THAT THE BUCKLING OF ANY INDIVIDUAL TRUSS MEMBER CAN BE RESISTED INTERNALLY BY THE STRUCTURE (E.G. BUCKLING MEMBER T-BRACING, L-BRACING, ETC.) OF THE INDIVIDUAL TRUSS. THE TRUSS INDIVIDUAL MEMBER BUCKLING REINFORCEMENT SHALL BE INSTALLED AS SHOWN ON THE TRUSS DESIGN DRAWING OR ON SUPPLEMENTAL TRUSS MEMBER BUCKLING REINFORCEMENT DIAGRAMS PROVIDED BY THE TRUSS DESIGNER.
7. CONTRACTOR SHALL SUBMIT SHOP DRAWINGS, ERECTION DRAWINGS AND DESIGN CALCULATIONS SEALED BY A REGISTERED ENGINEER FOR REVIEW PRIOR TO MANUFACTURE. CALCULATIONS AND SHOP DRAWINGS SHALL SHOW ANY SPECIAL DETAILS REQUIRED AT BEARING POINTS.
8. ALL FABRICATION SHALL BE PERFORMED ON THE PREMISES OF A FABRICATOR REGISTERED AND APPROVED TO PERFORM SUCH WORK WITHOUT SPECIAL INSPECTION.

GLUED-LAMINATED BEAMS (GLULAM):

1. GLUED-LAMINATED BEAMS SHALL BE DOUGLAS FIR LARCH WITH THE FOLLOWING MINIMUM PROPERTIES: Fb = 2,400 PSI, Fv = 265 PSI, Fc (PERPENDICULAR) = 650 PSI, E = 1,800,000 PSI. BEAMS CANTILEVERING OVER SUPPORTS SHALL HAVE THE SPECIFIED MINIMUM PROPERTIES TOP AND BOTTOM.
2. CAMBER AS SHOWN ON DRAWINGS. IF NO CAMBER IS SPECIFIED, PROVIDE STANDARD CAMBER USING A RADIUS OF 3500 FEET.
3. ALL BEAMS SHALL BE FABRICATED USING WATERPROOF GLUE. FABRICATION AND HANDLING PER LATEST AITC AND WCLA STANDARDS. BEAMS SHALL BEAR GRADE STAMP AND AITC STAMP AND CERTIFICATE. APPEARANCE GRADE BEAMS SHALL BE USED IF INDICATED ON ARCHITECTURAL DRAWINGS.

SHOP DRAWINGS AND PRODUCT DATA SUBMITTALS:

1. SUBMIT SHOP DRAWINGS AND/O

TABLE 1: REQUIRED GEOTECHNICAL SPECIAL INSPECTIONS

890-IBC18

SYSTEM OR MATERIAL	INSPECTION				REMARKS
	IBC CODE REFERENCE	CODE OR STANDARD REFERENCE	FREQUENCY		
			CONTINUOUS	PERIODIC	
1. SOILS					
VERIFY MATERIALS BELOW SHALLOW FOUNDATIONS ARE ADEQUATE TO ACHIEVE THE DESIGN BEARING CAPACITY	1705.6	GEOTECHNICAL REPORT		X	BY THE GEOTECHNICAL ENGINEER
VERIFY EXCAVATIONS ARE EXTENDED TO PROPER DEPTH AND HAVE REACHED PROPER MATERIAL				X	
PERFORM CLASSIFICATION AND TESTING OF COMPACTED FILL MATERIAL				X	
VERIFY USE OF PROPER MATERIALS, DENSITIES AND LIFT THICKNESSES DURING PLACEMENT AND COMPACTION OF COMPACTED FILL			X		
PRIOR TO PLACEMENT OF COMPACTED FILL, INSPECT SUBGRADE AND VERIFY THAT SITE HAS BEEN PREPARED PROPERLY				X	

TABLE 1: REQUIRED STRUCTURAL SPECIAL INSPECTIONS

891.0-IBC21

SYSTEM OR MATERIAL	INSPECTION				REMARKS
	IBC CODE REFERENCE	CODE OR STANDARD REFERENCE	FREQUENCY		
			CONTINUOUS	PERIODIC	
1. FABRICATORS					891.0-IBC21
FABRICATED SYSTEMS AND ELEMENTS	1704.2.5			X	SPECIAL INSPECTIONS APPLY TO VERIFICATION OF DETAILED FABRICATION AND QUALITY CONTROL PROCEDURES, INCLUDING REVIEW FOR COMPLETENESS AND ADEQUACY RELATIVE TO THE CODE REQUIREMENTS. SPECIAL INSPECTIONS ARE NOT REQUIRED FOR WORK DONE ON THE PREMISES OF A FABRICATOR REGISTERED AND APPROVED TO PERFORM SUCH WORK WITHOUT SPECIAL INSPECTION. APPROVED FABRICATORS, UPON COMPLETION OF COMPONENT MANUFACTURING, SHALL SUBMIT A CERTIFICATE OF COMPLIANCE TO THE BUILDING OFFICIAL STATING THAT THE WORK WAS PERFORMED IN ACCORDANCE WITH THE APPROVED CONSTRUCTION DOCUMENTS.
2. CONCRETE					891.0-IBC21
REINFORCING STEEL AND PRESTRESSING TENDON PLACEMENT	1704.4 1907.5 1913.4	ACI 318 1.3.2.C ACI 318 7.5		X	
PLACEMENT OF CAST-IN-PLACE ANCHOR BOLTS	1704.4 1911.1 1912.1	ACI 318 1.3.2.C	X		ALL BOLTS VISUALLY INSPECTED
VERIFY USE OF REQUIRED MIX DESIGN(S)	1704.4 1904 1905.2-4 1913.2 1913.3	ACI 318 1.3.2.A ACI 318, CHAPTER 4 ACI 318 5.2-5.4		X	
CONCRETE PLACEMENT	1704.4 1905.9-10	ACI 318 1.3.2.D ACI 318 5.9-5.10	X		
CONCRETE/SHOTCRETE CURING	1704.4 1905.11-13 1913.9	ACI 318 1.3.2.D ACI 318 5.11-5.13		X	
VERIFICATION OF IN-SITU CONCRETE STRENGTH PRIOR TO STRESSING OF TENDONS IN POST-TENSIONED CONCRETE	1704.4	ACI 318 18.13.4.3		X	
STRESSING OF TENDONS IN POST-TENSIONED CONCRETE	1704.4	ACI 318 1.3.2.F ACI 318 18.20.1	X		
VERIFICATION OF FORMWORK	1704.4 1906.1	ACI 318 6.1.1		X	SPECIAL INSPECTIONS APPLY TO SHAPE, LOCATION AND DIMENSIONS OF THE CONCRETE MEMBER BEING FORMED
3. POST-INSTALLED ANCHORS					
INSTALLATION IN HARDENED CONCRETE AND COMPLETED MASONRY	1703.4.2	THIRD PARTY PRODUCT TEST REPORT	X		SPECIAL INSPECTIONS APPLY TO ANCHOR PRODUCT NAME, TYPE, AND DIMENSIONS, HOLE DIMENSIONS, COMPLIANCE WITH DRILL BIT REQUIREMENTS, CLEANLINESS OF THE HOLE AND ANCHOR, ADHESIVE EXPIRATION DATE, ANCHOR/ADHESIVE INSTALLATION, ANCHOR EMBEDMENT, AND TIGHTENING TORQUE. FREQUENCY OF INSPECTIONS PER APPLICABLE PRODUCT TEST REPORT

TABLE 5: REQUIRED TESTING FOR SPECIAL INSPECTIONS

894-IBC18

SYSTEM OR MATERIAL	INSPECTION				REMARKS
	IBC CODE REFERENCE	CODE OR STANDARD REFERENCE	FREQUENCY		
			CONTINUOUS	PERIODIC	
1. GEOTECHNICAL					
FILL IN-PLACE DENSITY OR PREPARED SUBGRADE DENSITY	1705.6	VARIES; MINIMUM PER IBC APPENDIX J107.5		X	BY THE GEOTECHNICAL ENGINEER
MATERIAL VERIFICATION		VARIES; CLASSIFICATION AND TESTING OF CONTROLLED FILL MATERIALS		X	BY THE GEOTECHNICAL ENGINEER
2. CONCRETE					
CONCRETE STRENGTH	1704.4 1905.6	ASTM C39	EACH 50 CY NOT LESS THAN ONE TEST EACH 5000 SF OF SLAB OR WALL PLACED EACH DAY		FABRICATE SPECIMENS AT TIME FRESH CONCRETE IS PLACED
CONCRETE SLUMP		ASTM C143			
CONCRETE AIR CONTENT		ASTM C231			
CONCRETE TEMPERATURE		ASTM C1064			

INTERPRETATION OF DRAWINGS

ABBREVIATIONS

A.B.C.	AGGREGATE BASE COURSE
A.F.F.	ABOVE FINISHED FLOOR
ALT	ALTERNATE
A.B.	ANCHOR BOLT
B.F.F.	BELOW FINISHED FLOOR
B.O.B.	BOTTOM OF BEAM
B.O.D.	BOTTOM OF DECK
B.O.F.	BOTTOM OF FOOTING
B.O.S.	BOTTOM OF STEEL
BOT	BOTTOM
BRG	BEARING
C.I.P.	CAST IN PLACE
C.F.S.	COLD FORMED STEEL
C.L.	CENTERLINE
CLR	CLEAR
CONC.	CONCRETE
CONC. C.J.	CONCRETE CONTROL JOINT
C.M.U.	CONCRETE MASONRY UNIT
CONN.	CONNECTION
CONT.	CONTINUOUS
D.L.	DEAD LOAD
DIA.	DIAMETER
DN	DOWN
DWG (S)	DRAWING(S)
(E)	EXISTING
E.F.	EACH FACE
E.O.S.	EDGE OF SLAB
EQ	EQUAL
EQUIP.	EQUIPMENT
EXP. BOLT	EXPANSION BOLT
E.J.	EXPANSION JOINT
E.W.	EACH WAY
FDN	FOUNDATION
F.F.E.	FINISHED FLOOR ELEVATION
GA	GAGE
GALV	GALVANIZED
G.S.N.	GENERAL STRUCTURAL NOTES
GLB (GLULAM)	GLUED-LAMINATED BEAM
HORIZ.	HORIZONTAL
I.B.C.	INTERNATIONAL BUILDING CODE
I.C.C.	INTERNATIONAL CODE COUNCIL
I.C.F.	INSULATED CONCRETE FORM
K (KIP)	1000 POUNDS
L.L.	LIVE LOAD
LBS	POUNDS
L.L.H.	LONG LEG HORIZONTAL
L.L.V.	LONG LEG VERTICAL
MFR ('S)	MANUFACTURER('S)
M.C.J.	MASONRY CONTROL JOINT
MECH.	MECHANICAL
(N)	NEW
N/A	NOT APPLICABLE
N.I.C.	NOT IN CONTRACT
N.F.S.	NON-FROST SUSCEPTIBLE
N.T.	NOT TO SCALE
O.C.	ON CENTER
OPP	OPPOSITE (MIRRORED)
P.A.F.	POWDER ACTUATED FASTENER
P.C.	PRECAST CONCRETE
PCF	POUNDS PER CUBIC FOOT
PLF	POUNDS PER LINEAR FOOT
PREFAB	PREFABRICATED
P.S.F.	POUNDS PER SQUARE FOOT
P.S.I.	POUNDS PER SQUARE INCH
REINF.	REINFORCING
SCH	SCHEDULE
SIM	SIMILAR
S.I.P.	STRUCTURAL INSULATED PANEL
S.L.R.S.	SEISMIC LOAD RESISTING SYSTEM
SP	SPACES
STD	STANDARD
T&B	TOP AND BOTTOM
T.L.	TOTAL LOAD
T.O.B.	TOP OF BEAM
T.O.C.	TOP OF CONCRETE
T.O.D.	TOP OF DECK
T.O.F.	TOP OF FOOTING
T.O.L.	TOP OF LEDGER
T.O.M.	TOP OF MASONRY
T.O.PL.	TOP OF PLATE
T.O.S.	TOP OF STEEL
T.O.W.	TOP OF WALL
TYP	TYPICAL
U.N.O.	UNLESS NOTED OTHERWISE.
VERT.	VERTICAL
W.S.P.	WOOD STRUCTURAL PANEL
W.W.F.	WELDED WIRE FABRIC
W/ (W/O)	WITH (WITHOUT)

PLAN LEGEND

SYMBOL	DESCRIPTION	REMARKS
101	DETAIL CUTS ON PLANS	FOUNDATION DETAILS ARE 100 SERIES NUMBERS. FRAMING DETAILS ARE 200 SERIES NUMBERS. BRACED FRAME DETAILS ARE 300 SERIES NUMBERS. STAIR FRAMING DETAILS ARE 400 SERIES NUMBERS.
#	KEYNOTE	
	8" MASONRY WALL U.N.O.	SEE PLANS AND SCHEDULES FOR SIZE AND REINFORCING
	12" MASONRY WALL U.N.O.	SEE PLANS AND SCHEDULES FOR SIZE AND REINFORCING
	CONCRETE WALL U.N.O.	SEE PLANS AND SCHEDULES FOR SIZE AND REINFORCING
	STEEL STUD WALL U.N.O.	SEE PLANS AND SCHEDULES FOR SIZE
	WOOD STUD WALL U.N.O.	SEE PLANS AND SCHEDULES FOR SIZE
SW	SHEAR WALL	SEE PLANS FOR LOCATION, SIZE AND TYPE
SW SW	TWO-SIDED SHEAR WALL	SEE PLANS FOR LOCATION, SIZE AND TYPE
H	HOLDOWN ANCHOR	SEE PLANS AND SCHEDULES FOR SIZE AND LOCATIONS
M.C.J.	MASONRY CONTROL JOINT	SEE PLANS FOR LOCATION
P.J.	PANEL JOINT	SEE PLANS FOR LOCATION
C.J.	CONTROL JOINT	SEE PLANS FOR LOCATION
	DIRECTION OF SLOPE	VERIFY DEPTH WITH ARCHITECTURAL AND/OR MECHANICAL DRAWINGS
	SLAB DEPRESSION/ CHANGE IN ELEVATION	VERIFY DEPTH WITH ARCHITECTURAL DRAWINGS
B (F)	FLUSH BEAM	
B (D)	DROPPED BEAM	
	BRACED FRAME MEMBERS	SEE PLANS FOR LOCATION
	RIGID (MOMENT) CONNECTION	
	SIMPLE BEAM SPLICE CONNECTION	
(15") (15")	CIRCULAR OR RECTANGULAR OPENING IN BEAM WEB (SIZE)	SEE TYPICAL DETAIL U.N.O.
c=1/2"	BEAM CAMBER	
	NUMBER OF ROWS OF BOLTS AT BEAM TO COLUMN OR BEAM TO BEAM CONNECTION	SEE PLANS FOR LOCATION. IF NO SYMBOL INDICATED, SINGLE ROW OF BOLTS OCCURS
(-2 1/2")	TOP OF STEEL ELEVATION RELATIVE TO BOTTOM OF DECK ELEVATION	
(24)	QUANTITY OF HEADED STUDS ON COMPOSITE STEEL BEAM	SEE G.S.N. AND TYPICAL DETAILS FOR PLACEMENT
100'-0"	ELEVATION TARGET	
	REVISION SYMBOL	
	OPENING	
	MECHANICAL EQUIPMENT	VERIFY SIZE AND LOCATION WITH ARCHITECTURAL AND/OR MECHANICAL DRAWINGS
	POINT OF SUPPORT/SHORING	

GENERAL STRUCTURAL NOTES (CONTINUED)

(APPLY UNLESS NOTED OTHERWISE)

DEFERRED SUBMITTALS: (PER 2015 IBC 107.3.4.1)

1. FOR THE PURPOSES OF THIS SECTION, DEFERRED SUBMITTALS ARE DEFINED AS THOSE PORTIONS OF THE DESIGN THAT ARE NOT SUBMITTED AT THE TIME OF THE APPLICATION AND WHICH ARE TO BE SUBMITTED TO THE BUILDING OFFICIAL WITHIN A SPECIFIED PERIOD.

2. DEFERRAL OF ANY SUBMITTAL ITEMS SHALL HAVE PRIOR APPROVAL OF THE BUILDING OFFICIAL. THE ARCHITECT OR ENGINEER OF RECORD SHALL LIST THE DEFERRED SUBMITTALS ON THE PLANS AND THE CONTRACTOR SHALL SUBMIT THE DEFERRED SUBMITTAL DOCUMENTS FOR REVIEW BY THE BUILDING OFFICIAL.

3. SUBMITTAL DOCUMENTS FOR DEFERRED SUBMITTAL ITEMS SHALL BE SUBMITTED TO THE ARCHITECT OR ENGINEER OF RECORD A MINIMUM OF 30 DAYS PRIOR TO FABRICATION. THE DOCUMENTS SHALL BE REVIEWED FOR GENERAL CONFORMANCE WITH THE DRAWINGS. A COPY OF THE DEFERRED SUBMITTAL DOCUMENTS SHALL BE SUBMITTED TO THE BUILDING OFFICIAL WITH A NOTATION INDICATING THAT THE DEFERRED SUBMITTAL DOCUMENTS HAVE BEEN REVIEWED. THE DEFERRED SUBMITTAL ITEMS SHALL NOT BE INSTALLED UNTIL THEIR DESIGN AND SUBMITTAL DOCUMENTS HAVE BEEN APPROVED BY THE BUILDING OFFICIAL.

4. DEFERRED SUBMITTAL ITEMS:

   WOOD TRUSSES

SPECIAL INSPECTIONS AND TESTING:

1. THE CONTRACTOR ACTING AS THE OWNER'S AGENT) SHALL EMPLOY ONE OR MORE SPECIAL INSPECTORS TO PROVIDE INSPECTION AND TESTING DURING CONSTRUCTION OF THE TYPES OF WORK REQUIRING SPECIAL INSPECTION AS INDICATED ON THE DRAWINGS.

2. EACH SPECIAL INSPECTOR SHALL BE A QUALIFIED PERSON WHO SHALL DEMONSTRATE COMPETENCE, TO THE SATISFACTION OF THE BUILDING OFFICIAL AND STRUCTURAL ENGINEER OF RECORD, FOR INSPECTION OF THE PARTICULAR TYPE OF CONSTRUCTION OR OPERATION REQUIRING SPECIAL INSPECTION.

3. THE CONTRACTOR SHALL CONVENE A MEETING WITH THE SPECIAL INSPECTION AGENCY (AGENCIES), THE BUILDING OFFICIAL, THE ARCHITECT, OWNER AND THE STRUCTURAL ENGINEER OF RECORD TO REVIEW INSPECTION REQUIREMENTS AND PROCEDURES, PRIOR TO COMMENCING WITH CONSTRUCTION.

4. DUTIES AND RESPONSIBILITIES OF THE SPECIAL INSPECTOR:

   A. THE SPECIAL INSPECTOR SHALL OBSERVE THE WORK ASSIGNED FOR CONFORMANCE TO THE APPROVED CONSTRUCTION DOCUMENTS.
   B. THE SPECIAL INSPECTOR SHALL FURNISH INSPECTION REPORTS TO THE OWNER AND/OR BUILDING OFFICIAL, AND TO THE ENGINEER OR ARCHITECT OF RECORD. REPORTS SHALL INDICATE THAT WORK INSPECTED WAS DONE IN CONFORMANCE TO APPROVED CONSTRUCTION DOCUMENTS. DISCREPANCIES SHALL BE BROUGHT TO THE IMMEDIATE ATTENTION OF THE CONTRACTOR FOR CORRECTION, THEN, IF UNCORRECTED, TO THE ENGINEER OR ARCHITECT OF RECORD AND THE BUILDING OFFICIAL. IT IS EXPECTED THAT REPORTS WILL BE SUBMITTED ON A WEEKLY BASIS AT A MINIMUM.
   C. UPON COMPLETION OF THE ASSIGNED WORK, THE SPECIAL INSPECTOR SHALL COMPLETE AND SIGN THE APPROPRIATE FORMS CERTIFYING THAT, TO THE BEST OF HIS KNOWLEDGE, THE WORK IS IN CONFORMANCE WITH THE APPROVED CONSTRUCTION DOCUMENTS, AND THE APPLICABLE WORKMANSHIP PROVISIONS OF THE CODE.

JSRa
JOHNSON SMITTHIPONG & ROSAMOND ASSOCIATES, INC.
5210 E Williams Cir ∘ Ste 600 ∘ Tucson, AZ 85711
(520) 547-7904 ∘ www.jsrarchinc.com

Consultants:

ISSUED FOR INTERIM REVIEW
THIS DOCUMENT IS NOT TO BE USED FOR REGULATORY APPROVAL, PERMIT, OR CONSTRUCTION
Vernon Rosamond
Arizona Lic #: 9793
Date: 8/13/2024

iHOUSE APARTMENT

Tonalea, AZ 86044

U. S. DEPARTMENT OF HEALTH AND HUMAN SERVICES
INDIAN HEALTH SERVICE
NAVAJO AREA OFFICE

No.	Date	Description

Issue Date:	8/13/2024
Project No:	23-390
Scale:	1 : 1
Drawn By:	KGW
Checked By:	SAM

PHASE IV (Final CD)

Sheet Title:

SPECIAL INSPECTIONS, I.O.D.

Sheet Number:

S002

SCHNEIDER STRUCTURAL ENGINEERS
CREATING ELEGANT SOLUTIONS
435 East 9th Street | Tucson, AZ 85705 | 520.512.8183 | www.sastructural.com

Project Number: 124109

UNLESS THIS DRAWING IS SIGNED AND SEALED BY A LICENSED STRUCTURAL ENGINEER, IT IS A PRELIMINARY DESIGN AND SHALL NOT BE USED FOR CONSTRUCTION.

Autodesk Docs://23-390 IHS iHouse Apt v2023/23-390 05 Strc iHouse Apt 2023.rvt
8/12/2024 8:39:58 AM

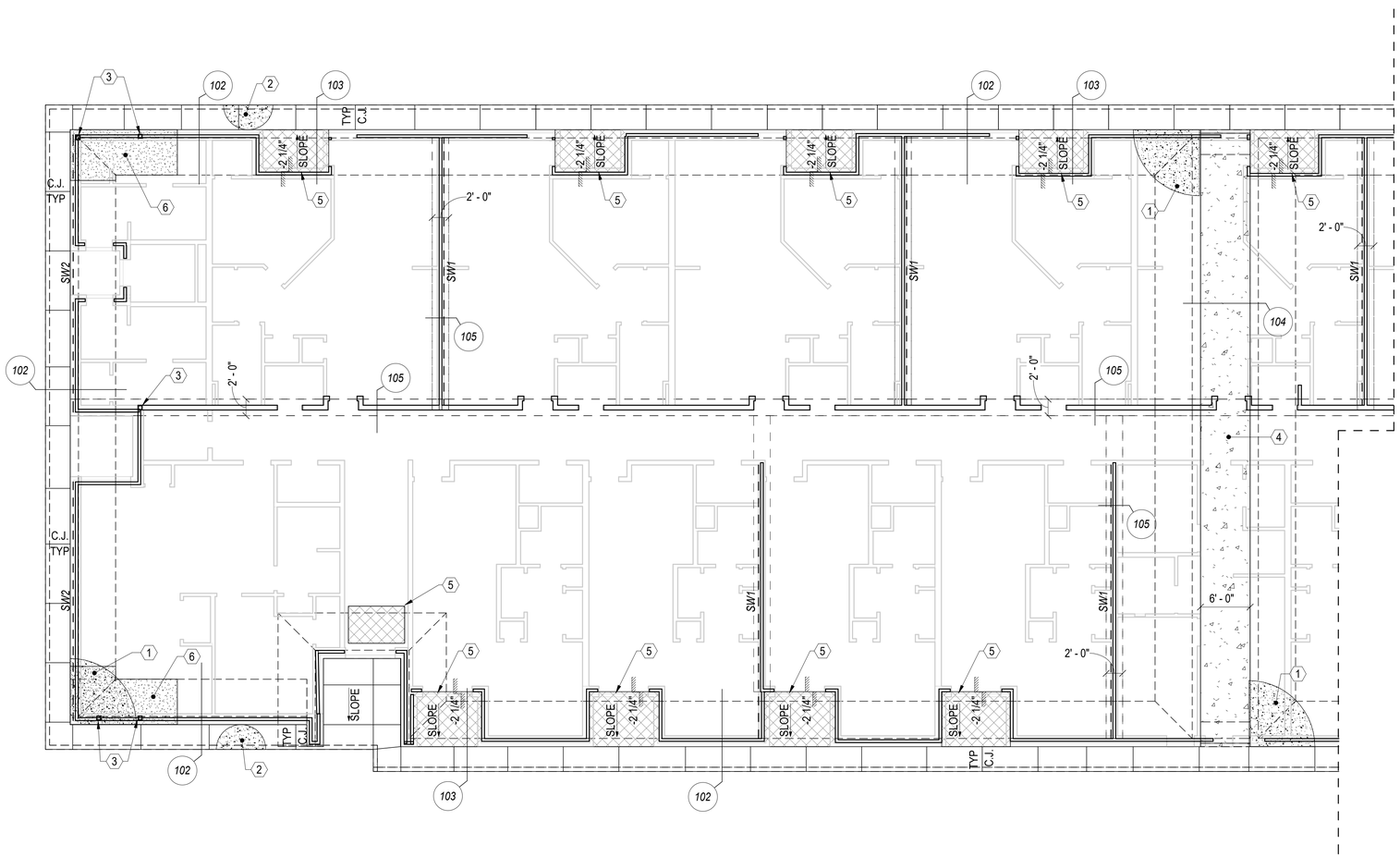

FOUNDATION PLAN - WEST

SCALE: 1/8" = 1'-0"

FOUNDATION KEYNOTES:

ALL KEYNOTES MAY NOT APPLY ON ALL SHEETS

1. 5" CONCRETE POST TENSIONED SLAB ON GRADE WITH 1/2" DIAMETER TENDONS, CENTERED IN SLAB THICKNESS. SEE FOUNDATION NOTES. FOR SLAB TENDON LAYOUT PLAN SEE SHEETS S123 AND S124.
2. 4" CONCRETE SLAB REINFORCED WITH FIBERMESH OVER 2" INSULATION. COORDINATE WITH ARCHITECTURAL DRAWINGS.
3. PROVIDE 4x6 WOOD COLUMN BELOW GIRDER TRUSS ABOVE, TYPICAL. COORDINATE LOCATION OF COLUMN WITH TRUSS LAYOUT AND TRUSS MANUFACTURER. ATTACH AT TOP AND BOTTOM PER TYPICAL WOOD FASTENING SCHEDULE. PROVIDE SIMPSON SLTHD8 STRAP TIE HOLDOWN TO FOUNDATION AT ALL 4x6 WOOD COLUMNS BELOW GIRDER TRUSSES.
4. 8" CONCRETE SLAB ON GRADE CLOSURE POUR REINFORCED WITH #4 AT 8" O.C. CENTERED IN SLAB.
5. DEPRESSION IN CONCRETE SLAB ON GRADE. COORDINATE SIZE, DEPTH, AND LOCATION WITH ARCHITECTURAL DRAWINGS.
6. AREA OF THICKENED SLAB FOOTING CENTERED UNDER DOUBLE STUD AT GIRDER TRUSS LOCATIONS. THICKENED SLAB TO EXTEND 4'-6" EITHER SIDE OF DOUBLE STUD LOCATION. COORDINATE LOCATION OF DOUBLE STUD WITH TRUSS LAYOUT AND TRUSS MANUFACTURER.

BEARING WALL STUD SPACING:
ALL EXTERIOR BEARING AND SHEAR WALLS TO BE 2x4 D.F. #2 WOOD STUDS AT 16" O.C. PER TYPICAL STUD WALL FRAMING DETAIL.

ALL INTERIOR CORRIDOR BEARING WALLS TO BE 2x6 D.F. #2 WOOD STUDS AT 24" O.C., EACH STUD LOCATED DIRECTLY UNDER ROOF TRUSSES.

TYPICAL HOLDOWN NOTE:
PROVIDE THICKENED SLABS AT HOLDOWNS PER DETAIL 102/S521 AND TYPICAL HOLDOWN SCHEDULE.

DIMENSIONS:
SEE ARCHITECTURAL DRAWINGS FOR DIMENSIONED LOCATION OF WALLS, COLUMNS, AND CONCRETE SLAB EDGES.

JSRa
JOHNSON SMITTHIPONG & ROSAMOND ASSOCIATES, INC.
5210 E Williams Cir • Ste 600 • Tucson, AZ 85711
(520) 547-7904 • www.jsrarchinc.com

Consultants:

ISSUED FOR INTERIM REVIEW
THIS DOCUMENT IS NOT TO BE USED FOR REGULATORY APPROVAL, PERMIT, OR CONSTRUCTION
Vernon Rosamond
Arizona Lic #: 9793
Date: 8/13/2024

iHOUSE APARTMENT

Tonalea, AZ 86044

U. S. DEPARTMENT OF HEALTH AND HUMAN SERVICES
INDIAN HEALTH SERVICE
NAVAJO AREA OFFICE

No.	Date	Description

Issue Date:	8/13/2024
Project No:	23-390
Scale:	As indicated
Drawn By:	KGW
Checked By:	SAM

PHASE IV (Final CD)

Sheet Title:

FOUNDATION PLAN WEST

Sheet Number:

S121

SCHNEIDER STRUCTURAL ENGINEERS
CREATING ELEGANT SOLUTIONS
435 East 9th Street | Tucson, AZ 85705 | 520.512.8183 | www.sastructural.com
Project Number: 124109

UNLESS THIS DRAWING IS SIGNED AND SEALED BY A LICENSED STRUCTURAL ENGINEER, IT IS A PRELIMINARY DESIGN AND SHALL NOT BE USED FOR CONSTRUCTION.

Autodesk Docs://23-390 IHS House Apt v2023/23-390 05 Strc House Apt 2023.rvt
8/12/2024 8:39:59 AM

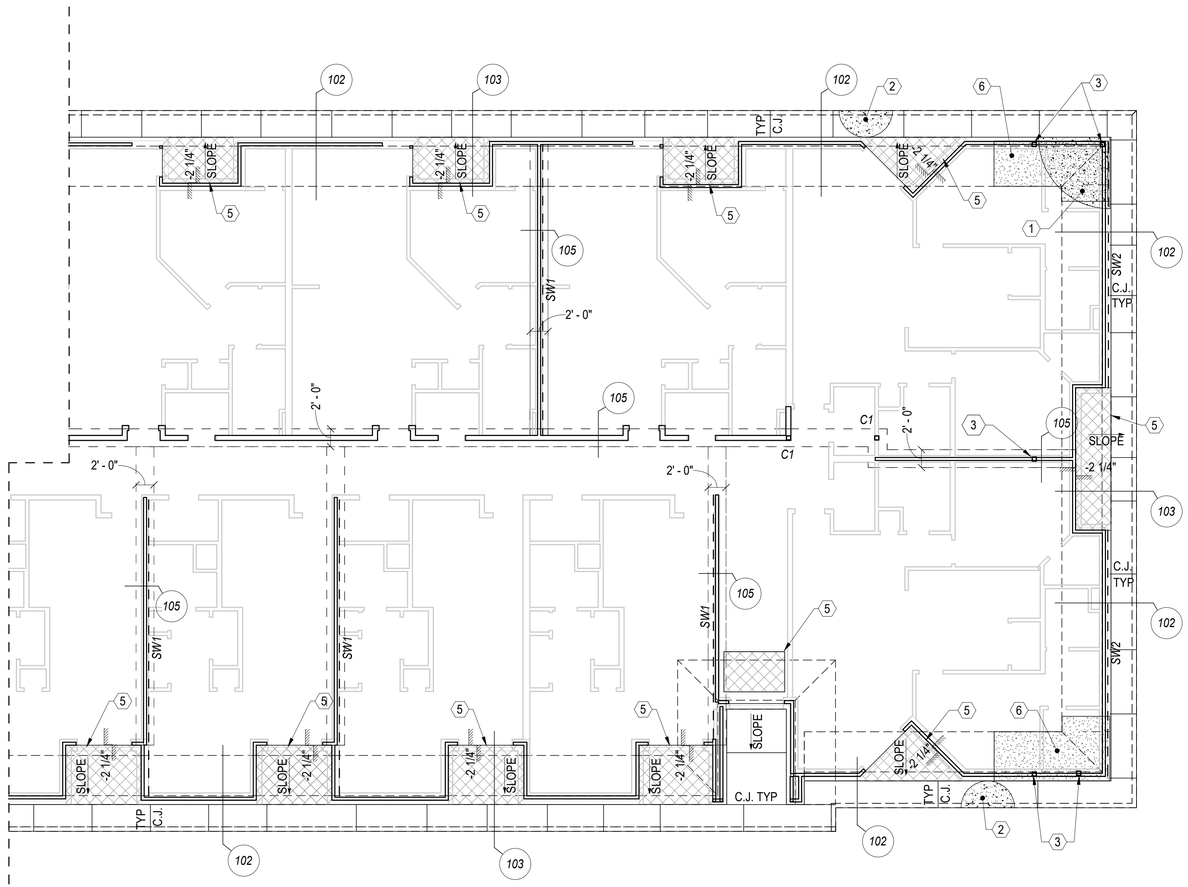

FOUNDATION PLAN - EAST

SCALE: 1/8" = 1'-0"

FOUNDATION KEYNOTES:

ALL KEYNOTES MAY NOT APPLY ON ALL SHEETS

1. 5" CONCRETE POST TENSIONED SLAB ON GRADE WITH 1/2" DIAMETER TENDONS, CENTERED IN SLAB THICKNESS. SEE FOUNDATION NOTES. FOR SLAB TENDON LAYOUT PLAN SEE SHEETS S123 AND S124.
2. 4" CONCRETE SLAB REINFORCED WITH FIBERMESH OVER 2" INSULATION. COORDINATE WITH ARCHITECTURAL DRAWINGS.
3. PROVIDE 4x6 WOOD COLUMN BELOW GIRDER TRUSS ABOVE, TYPICAL. COORDINATE LOCATION OF COLUMN WITH TRUSS LAYOUT AND TRUSS MANUFACTURER. ATTACH AT TOP AND BOTTOM PER TYPICAL WOOD FASTENING SCHEDULE. PROVIDE SIMPSON SLTHD8 STRAP TIE HOLDOWN TO FOUNDATION AT ALL 4x6 WOOD COLUMNS BELOW GIRDER TRUSSES.
4. 8" CONCRETE SLAB ON GRADE CLOSURE POUR REINFORCED WITH #4 AT 8" O.C. CENTERED IN SLAB.
5. DEPRESSION IN CONCRETE SLAB ON GRADE. COORDINATE SIZE, DEPTH, AND LOCATION WITH ARCHITECTURAL DRAWINGS.
6. AREA OF THICKENED SLAB FOOTING CENTERED UNDER DOUBLE STUD AT GIRDER TRUSS LOCATIONS. THICKENED SLAB TO EXTEND 4'-6" EITHER SIDE OF DOUBLE STUD LOCATION. COORDINATE LOCATION OF DOUBLE STUD WITH TRUSS LAYOUT AND TRUSS MANUFACTURER.

BEARING WALL STUD SPACING:
ALL EXTERIOR BEARING AND SHEAR WALLS TO BE 2x4 D.F. #2 WOOD STUDS AT 16" O.C. PER TYPICAL STUD WALL FRAMING DETAIL.

ALL INTERIOR CORRIDOR BEARING WALLS TO BE 2x6 D.F. #2 WOOD STUDS AT 24" O.C., EACH STUD LOCATED DIRECTLY UNDER ROOF TRUSSES.

TYPICAL HOLDOWN NOTE:
PROVIDE THICKENED SLABS AT HOLDOWNS PER DETAIL 102/S521 AND TYPICAL HOLDOWN SCHEDULE.

DIMENSIONS:
SEE ARCHITECTURAL DRAWINGS FOR DIMENSIONED LOCATION OF WALLS, COLUMNS, AND CONCRETE SLAB EDGES.

JSRa
JOHNSON SMITTHIPONG & ROSAMOND ASSOCIATES, INC.
5210 E Williams Cir • Ste 600 • Tucson, AZ 85711
(520) 547-7904 • www.jsrarchinc.com

Consultants:

ISSUED FOR INTERIM REVIEW
THIS DOCUMENT IS NOT TO BE USED FOR REGULATORY APPROVAL, PERMIT, OR CONSTRUCTION
Vernon Rosamond
Arizona Lic #: 9793
Date: 8/13/2024

iHOUSE APARTMENT

Tonalea, AZ 86044

U. S. DEPARTMENT OF HEALTH AND HUMAN SERVICES
INDIAN HEALTH SERVICE
NAVAJO AREA OFFICE

No.	Date	Description

Issue Date:	8/13/2024
Project No:	23-390
Scale:	As indicated
Drawn By:	KGW
Checked By:	SAM

PHASE IV (Final CD)

Sheet Title:

FOUNDATION PLAN EAST

Sheet Number:

S122

SCHNEIDER STRUCTURAL ENGINEERS
CREATING ELEGANT SOLUTIONS
435 East 9th Street | Tucson, AZ 85705 | 520.512.8183 | www.sastructural.com

Project Number: 124109

UNLESS THIS DRAWING IS SIGNED AND SEALED BY A LICENSED STRUCTURAL ENGINEER, IT IS A PRELIMINARY DESIGN AND SHALL NOT BE USED FOR CONSTRUCTION.

Autodesk Docs://23-390 IHS IHouse Apt v2023/23-390 05 Strc IHouse Apt 2023.rvt
8/12/2024 8:39:59 AM

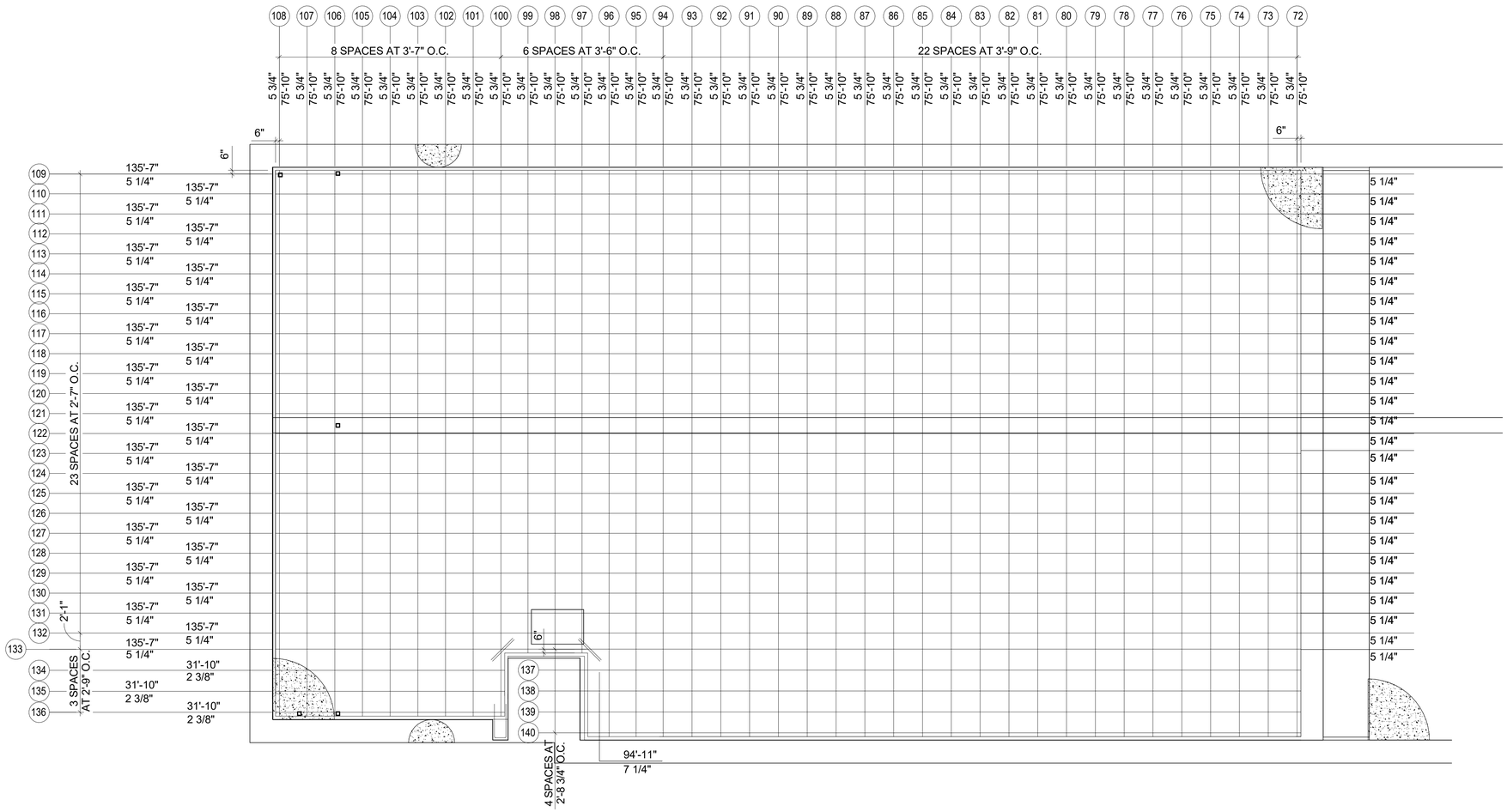

FOUNDATION PLAN - WEST PT

SCALE: 1/8" = 1'-0"

JSRa

JOHNSON SMITTHIPONG & ROSAMOND ASSOCIATES, INC.

5210 E Williams Cir • Ste 600 • Tucson, AZ 85711
(520) 547-7904 • www.jsrarchinc.com

Consultants:

ISSUED FOR INTERIM REVIEW

THIS DOCUMENT IS NOT TO BE USED FOR REGULATORY APPROVAL, PERMIT, OR CONSTRUCTION

Vernon Rosamond
Arizona Lic #: 9793
Date: 8/13/2024

iHOUSE APARTMENT

Tonalea, AZ 86044

U. S. DEPARTMENT OF HEALTH AND HUMAN SERVICES
INDIAN HEALTH SERVICE

NAVAJO AREA OFFICE

No.	Date	Description

Issue Date:	8/13/2024
Project No:	23-390
Scale:	1/8" = 1'-0"
Drawn By:	KGW
Checked By:	SAM

PHASE IV (Final CD)

Sheet Title:

PT LAYOUT WEST

Sheet Number:

S123

SCHNEIDER STRUCTURAL ENGINEERS
CREATING ELEGANT SOLUTIONS
435 East 9th Street | Tucson, AZ 85705 | 520.512.8183 | www.sastructural.com

Project Number: 124109

UNLESS THIS DRAWING IS SIGNED AND SEALED BY A LICENSED STRUCTURAL ENGINEER, IT IS A PRELIMINARY DESIGN AND SHALL NOT BE USED FOR CONSTRUCTION.

Autodesk Docs://23-390 IHS IHouse Apt v2023/23-390 05 Strc IHouse Apt 2023.rvt
8/12/2024 8:40:00 AM

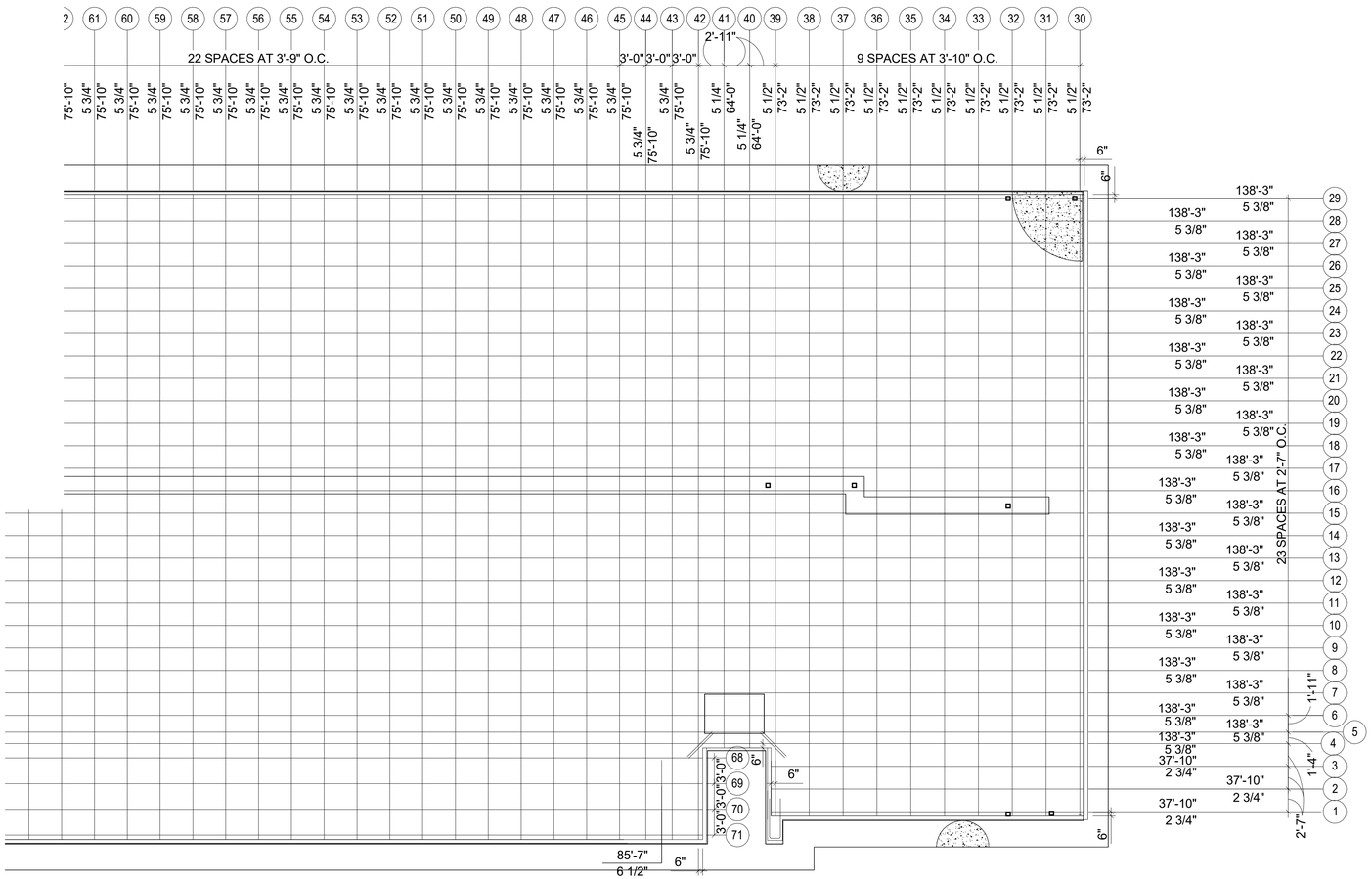

N

FOUNDATION PLAN - EAST PT

SCALE: 1/8" = 1'-0"

JSRa
JOHNSON SMITTHIPONG & ROSAMOND ASSOCIATES, INC.
5210 E Williams Cir • Ste 600 • Tucson, AZ 85711
(520) 547-7904 • www.jsrarchinc.com

Consultants:

ISSUED FOR INTERIM REVIEW

THIS DOCUMENT IS NOT TO BE USED FOR REGULATORY APPROVAL, PERMIT, OR CONSTRUCTION

Vernon Rosamond
Arizona Lic #: 9793
Date: 8/13/2024

iHOUSE APARTMENT

Tonalea, AZ 86044

U. S. DEPARTMENT OF HEALTH AND HUMAN SERVICES
INDIAN HEALTH SERVICE
NAVAJO AREA OFFICE

No.	Date	Description

Issue Date:	8/13/2024
Project No:	23-390
Scale:	1/8" = 1'-0"
Drawn By:	KGW
Checked By:	SAM

PHASE IV (Final CD)

Sheet Title:

PT LAYOUT EAST

Sheet Number:

S124

SCHNEIDER
STRUCTURAL ENGINEERS
CREATING ELEGANT SOLUTIONS
435 East 9th Street | Tucson, AZ 85705 | 520.512.8183 | www.sastructural.com

Project Number: 124109

UNLESS THIS DRAWING IS SIGNED AND SEALED BY A LICENSED STRUCTURAL ENGINEER, IT IS A PRELIMINARY DESIGN AND SHALL NOT BE USED FOR CONSTRUCTION.

Autodesk Docs://23-390 IHS IHouse Apt v2023/23-390 05 Stlc IHouse Apt 2023.rvt
8/12/2024 8:40:00 AM

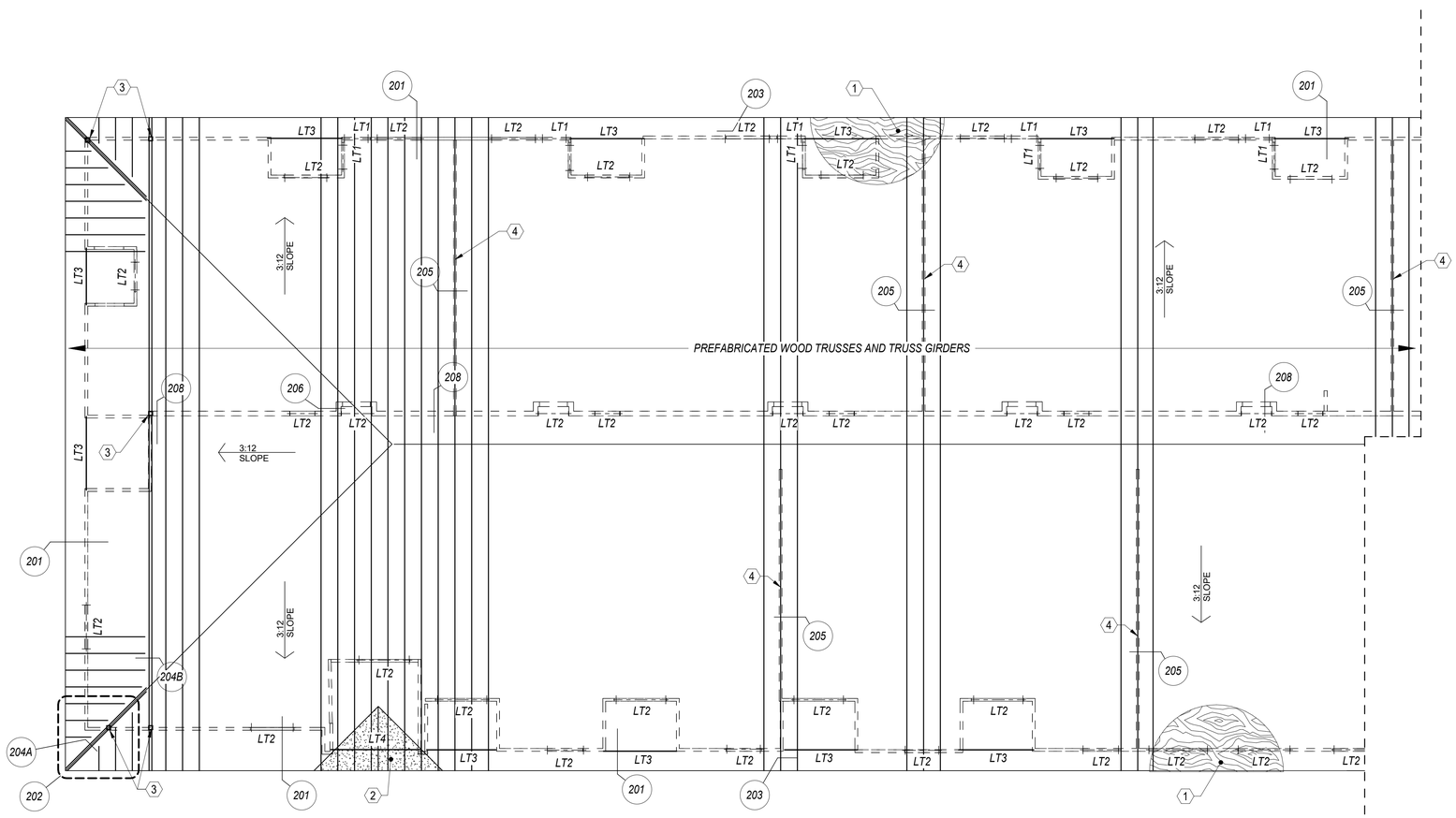

ROOF FRAMING PLAN - WEST

SCALE: 1/8" = 1'-0"

FRAMING KEYNOTES:

ALL KEYNOTES MAY NOT APPLY ON ALL SHEETS

1. 5/8" WSP SHEATHING AT ROOF. ATTACHMENT PER G.S.N.
2. AREA OF OVERFRAMING TO BE PROVIDED BY TRUSS MANUFACTURER. COORDINATE LOCATION AND CONFIGURATION WITH ARCHITECTURAL DRAWINGS.
3. PROVIDE 4x6 WOOD COLUMN BELOW GIRDER TRUSS ABOVE, TYPICAL. COORDINATE LOCATION OF COLUMN WITH TRUSS LAYOUT AND TRUSS MANUFACTURER. ATTACH AT TOP AND BOTTOM PER TYPICAL WOOD FASTENING SCHEDULE.
4. PROVIDE TRUSS ABOVE SHEAR WALLS PARALLEL TO SHEAR WALL AND ATTACH PER DETAIL 205.
5. PROVIDE SIMPSON LGT2 AT TRUSS CONNECTION.
6. PROVIDE SIMPSON LGT3 AT TRUSS CONNECTION.

JSRa
JOHNSON SMITTHIPONG & ROSAMOND ASSOCIATES, INC.
5210 E Williams Cir • Ste 600 • Tucson, AZ 85711
(520) 547-7904 • www.jsrarchinc.com

Consultants:

ISSUED FOR INTERIM REVIEW

THIS DOCUMENT IS NOT TO BE USED FOR REGULATORY APPROVAL, PERMIT, OR CONSTRUCTION

Vernon Rosamond
Arizona Lic #: 9793
Date: 8/13/2024

iHOUSE APARTMENT

Tonalea, AZ 86044

U. S. DEPARTMENT OF HEALTH AND HUMAN SERVICES
INDIAN HEALTH SERVICE
NAVAJO AREA OFFICE

No.	Date	Description

Issue Date:	8/13/2024
Project No:	23-390
Scale:	As indicated
Drawn By:	KGW
Checked By:	SAM

PHASE IV (Final CD)

Sheet Title:

ROOF FRAMING PLAN WEST

Sheet Number:

S151

SCHNEIDER STRUCTURAL ENGINEERS
CREATING ELEGANT SOLUTIONS
435 East 9th Street | Tucson, AZ 85705 | 520.512.8183 | www.sastructural.com
Project Number: 124109

UNLESS THIS DRAWING IS SIGNED AND SEALED BY A LICENSED STRUCTURAL ENGINEER, IT IS A PRELIMINARY DESIGN AND SHALL NOT BE USED FOR CONSTRUCTION.

Autodesk Docs://23-390 IHS iHouse Apt v2023/23-390 05 Strc iHouse Apt 2023.rvt
8/12/2024 8:40:00 AM

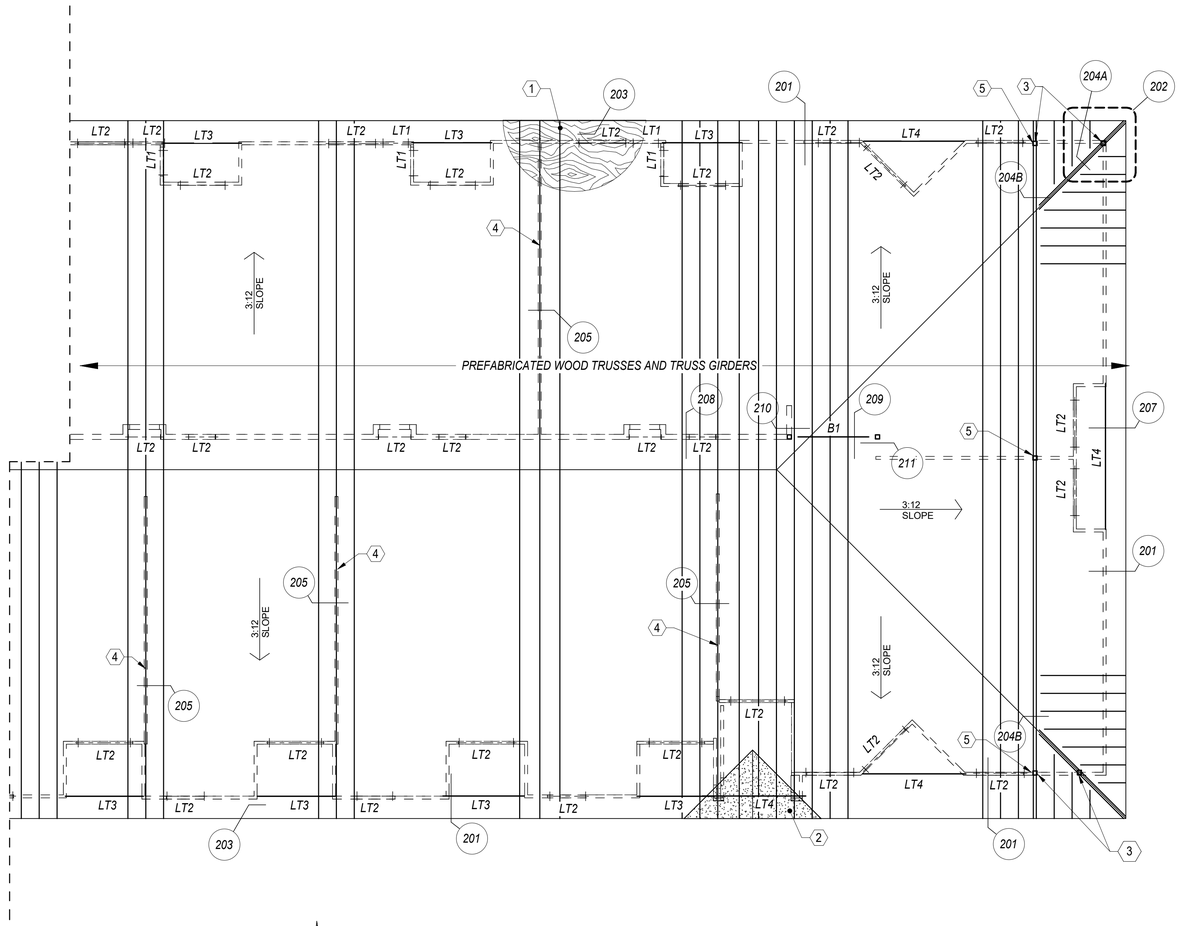

ROOF FRAMING PLAN - EAST

SCALE: 1/8" = 1'-0"

FRAMING KEYNOTES:

ALL KEYNOTES MAY NOT APPLY ON ALL SHEETS

1. 5/8" WSP SHEATHING AT ROOF. ATTACHMENT PER G.S.N.
2. AREA OF OVERFRAMING TO BE PROVIDED BY TRUSS MANUFACTURER. COORDINATE LOCATION AND CONFIGURATION WITH ARCHITECTURAL DRAWINGS.
3. PROVIDE 4x6 WOOD COLUMN BELOW GIRDER TRUSS ABOVE, TYPICAL. COORDINATE LOCATION OF COLUMN WITH TRUSS LAYOUT AND TRUSS MANUFACTURER. ATTACH AT TOP AND BOTTOM PER TYPICAL WOOD FASTENING SCHEDULE.
4. PROVIDE TRUSS ABOVE SHEAR WALLS PARALLEL TO SHEAR WALL AND ATTACH PER DETAIL 205.
5. PROVIDE SIMPSON LGT2 AT TRUSS CONNECTION.
6. PROVIDE SIMPSON LGT3 AT TRUSS CONNECTION.

JSRa
JOHNSON SMITTHIPONG & ROSAMOND ASSOCIATES, INC.
5210 E Williams Cir • Ste 600 • Tucson, AZ 85711
(520) 547-7904 • www.jsrarchinc.com

Consultants:

ISSUED FOR INTERIM REVIEW

THIS DOCUMENT IS NOT TO BE USED FOR REGULATORY APPROVAL, PERMIT, OR CONSTRUCTION

Vernon Rosamond
Arizona Lic #: 9793
Date: 8/13/2024

iHOUSE APARTMENT

Tonalea, AZ 86044

U. S. DEPARTMENT OF HEALTH AND HUMAN SERVICES
INDIAN HEALTH SERVICE
NAVAJO AREA OFFICE

No.	Date	Description

Issue Date:	8/13/2024
Project No:	23-390
Scale:	As indicated
Drawn By:	KGW
Checked By:	SAM

PHASE IV (Final CD)

Sheet Title:

ROOF FRAMING PLAN EAST

Sheet Number:

S152

SCHNEIDER STRUCTURAL ENGINEERS
CREATING ELEGANT SOLUTIONS
435 East 9th Street | Tucson, AZ 85705 | 520.512.8183 | www.sastructural.com

Project Number: 124109

UNLESS THIS DRAWING IS SIGNED AND SEALED BY A LICENSED STRUCTURAL ENGINEER, IT IS A PRELIMINARY DESIGN AND SHALL NOT BE USED FOR CONSTRUCTION.

Autodesk Docs://23-390 IHS iHouse Apt v2023/23-390 05 Strc iHouse Apt 2023.rvt
8/12/2024 8:40:01 AM

ANCHOR DIAMETER	VERT BOLT EMBEDMENT LENGTH	HORIZ BOLT EMBEDMENT LENGTH	HEADED STUD FILLET WELD SIZE, "S"
1/2"	7"	4"	1/4"
5/8"	7"	4"	5/16"
3/4"	7"	5"	5/16"
7/8"	8"	6"	5/16"
1"	9"	7"	3/8"
1 1/8"	10"	8"	---
1 1/4"	11"	9"	---

NOTES:

1. PROVIDE ANCHORS, ANCHOR BOLTS, AND HEADED STUDS PER THIS SCHEDULE UNLESS NOTED ON PLANS OR DETAILS.
2. SCHEDULE APPLIES TO ANCHORS IN CONCRETE AND MASONRY.
3. THICKNESS OF DRYPACK DOES NOT APPLY TOWARDS EMBEDMENT.

NOTE:
HEADED STUDS MAY BE AUTOMATICALLY WELDED IN LIEU OF FILLET WELDS SHOWN.

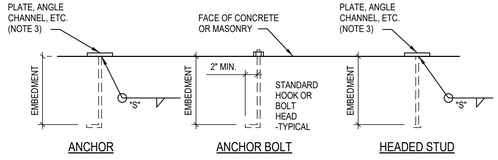

07 TYPICAL CAST-IN-PLACE ANCHOR, ANCHOR BOLT, AND HEADED STUD SCHEDULE
SCALE: NOT TO SCALE 501-001-TYP

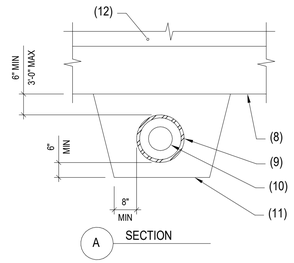

NOTES:

1. CAST IRON SLEEVE 2" LARGER THAN PIPE.
2. NO SLEEVES PERMITTED THROUGH FOOTING.
3. EXCAVATION BELOW THESE LINES NOT PERMITTED.
4. CONCRETE FILL PIPE TRENCH. EXTEND 2'-0" EACH SIDE OF SLEEVE.
5. 3'-0" MAXIMUM. STEP FOOTING IF NECESSARY IN ORDER TO MAINTAIN 3'-0" MAX HEIGHT.
6. BACKFILL PER SPECS.
7. 90% DENSITY (ASTM D-698).
8. CONCRETE FOOTING.
9. SLEEVE. PROVIDE 1/2" MINIMUM CLEARANCE AROUND PIPE OR CONDUIT.
10. PIPE OR CONDUIT.
11. CONCRETE FILL TO BE PLACED BEFORE FOOTING IS POURED. FORM SAME AS FOOTING AND POUR FULL WIDTH OF PIPE TRENCH.
12. FOUNDATION WALL.

NOTES:
A. NO PIPE SHALL PASS THROUGH FOOTINGS OR UNDER COLUMN FOOTINGS.
B. FOR TRENCHES GREATER THAN 3'-0" BELOW BOTTOM OF FOOTING, SEE TYPICAL PIPE PASSING BELOW WALL FOOTING DETAIL.

NOTES:

1. TABULATED VALUES BASED ON GRADE 60 REINFORCING BARS AND NORMAL WEIGHT CONCRETE.
2. TENSION DEVELOPMENT LENGTHS OF STANDARD HOOKS ARE BASED ON ACI 318-14, SECTION 25.4.3. LENGTHS ARE IN INCHES.
3. FOR BAR SIZES #3 THROUGH #11 ONLY:
A. IF CONCRETE COVER CONFORMS TO ACI 318-14, SECTION 25.4.3.2, THEN A MODIFICATION FACTOR OF 0.7 MAY BE APPLIED BUT THE RESULTING LENGTH MUST NOT BE LESS THAN 8DB NOR 6 IN.
B. IF HOOK IS ENCLOSED IN TIES OR STIRRUPS CONFORMING TO ACI 318-14, SECTION 25.4.3.2, THEN A MODIFICATION FACTOR OF 0.8 MAY BE APPLIED BUT THE RESULTING LENGTH MUST NOT BE LESS THAN 8DB NOT 6 IN.
4. FOR EPOXY-COATED HOOKS, MULTIPLY THE TABULATED VALUES BY 1.2.

HOOK DEVELOPMENT LENGTH(ldh)			
BAR SIZE	F'C=3,000 PSI	F'C=4,000 PSI	F'C=5000 PSI
#3	9	7	7
#4	11	10	9
#5	14	12	11
#6	17	15	13
#7	19	17	15
#8	22	19	17
#9	25	22	19
#1O	28	24	22
#11	31	27	27
#14	37	32	29
#18	50	43	39

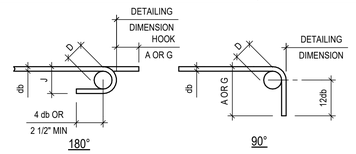

END HOOKS, ALL GRADES				
BAR SIZE	FINISHED BEND DIA. D, IN.	180° HOOKS		9O° HOOKS
		A OR G, IN.	J, IN.	A OR G, IN.
#3	2.25	5	3	6
#4	3	6	4	8
#5	3.75	7	5	1O
#6	4.5	8	6	12
#7	5.25	1O	7	14
#8	6	11	8	16
#9	9.5	15	11.75	19
#1O	1O.75	17	13.25	22
#11	12	19	14.75	24
#14	18.25	27	21.75	31
#18	24	36	28.5	41

	TENSION SPLICE LENGTHS (CLASS B)												COMP. BARS	
CONCRETE PSI	f'c=2,500/3,000 PSI				f'c = 4,000 PSI				f'c = 5,000 PSI				f'c = ALL	
BAR LOCATION	REGULAR		TOP		REGULAR		TOP		REGULAR		TOP		STD LAP	ENCLOSED WITH SPIRAL TIES
SPACING / SIZE	>2db	OTHER	>2db	OTHER	>2db	OTHER	>2db	OTHER	>2db	OTHER	>2db	OTHER		
#3	24"	36"	31"	46"	19"	28"	25"	37"	17"	25"	22"	33"	12"	12"
#4	32"	47"	41"	61"	25"	37"	33"	49"	23"	34"	29"	44"	15"	12"
#5	39"	59"	51"	77"	31"	47"	41"	61"	28"	42"	36"	54"	19"	15"
#6	59"	88"	77"	115"	47"	70"	61"	91"	42"	63"	54"	81"	23"	18"
#7	69"	103"	89"	134"	54"	81"	71"	106"	49"	73"	63"	95"	27"	21"
#8	78"	117"	102"	153"	62"	93"	81"	121"	56"	83"	72"	108"	30"	23"
#9	88"	132"	115"	172"	70"	105"	91"	136"	63"	94"	81"	122"	34"	26"
#10	100"	149"	129"	194"	79"	118"	102"	153"	71"	106"	92"	137"	39"	30"
#11	110"	165"	143"	215"	87"	131"	114"	170"	78"	117"	102"	152"	43"	33"

NOTES:
1. TOP BARS ARE ANY HORIZONTAL BARS PLACED SO THAT MORE THAN 12" OF FRESH CONCRETE IS CAST IN THE MEMBER BELOW THE REINFORCEMENT.
2. CONCRETE COVERAGE AROUND REINFORCING SHALL NOT BE LESS THAN THE DIAMETER OF THE BAR.

01 TYPICAL MINIMUM REINFORCING BAR SPLICE LENGTHS IN CONCRETE
SCALE: NOT TO SCALE 200-040-TYP

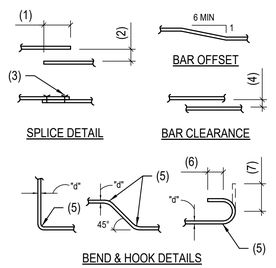

NOTES:

1. LAP - SEE G.S.N.
2. MAXIMUM 1/5 LAP BUT NOT MORE THAN 6".
3. WIRE TIES.
4. 1d (1" MINIMUM).
5. RADIUS=3d FOR BARS NOT OVER #8; 4d FOR #9, #10 AND #11 BARS; 5d FOR #14 AND #18 BARS. 5d FOR ALL GRADE 40 BARS WITH 180 DEGREE HOOK.
6. 4d (2 1/2" MINIMUM).
7. 12d (90 DEGREE HOOK).
8. 6d.
9. 135 DEGREE BEND.
10. BEND AROUND 1 1/2" PIN FOR #3 BARS.
BEND AROUND 2" PIN FOR #4 BARS.
BEND AROUND 2 1/2" PIN FOR #5 BARS.

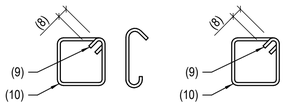

02 TYPICAL CONCRETE REINFORCING BAR DETAILS
SCALE: NOT TO SCALE 200-050-TYP

REINFORCING STEEL SIZE	REINFORCING STEEL EMBEDMENT LENGTH IN CONCRETE	REINFORCING STEEL EMBEDMENT LENGTH IN MASONRY
#3	3"	6"
#4	6"	8"
#5	6"	8"
#6	8"	8"
#7	8"	8"
#8	10"	8"
#9	12"	12"

NOTES:

1. PROVIDE POST-INSTALLED ANCHORS AND REINFORCING STEEL PER THIS SCHEDULE UNLESS NOTED OTHERWISE ON PLANS OR DETAILS.
2. POST-INSTALLED ANCHORS SHALL HAVE I.C.C. APPROVAL.
3. THICKNESS OF DRYPACK DOES NOT APPLY TOWARDS EMBEDMENT.
4. MECHANICAL ANCHORS INCLUDE BUT ARE NOT LIMITED TO WEDGE, UNDERCUT, AND SCREW TYPE ANCHORS.

ANCHOR DIAMETER	MECHANICAL ANCHOR EMBEDMENT LENGTH IN CONCRETE	MECHANICAL ANCHOR EMBEDMENT LENGTH IN MASONRY	THREADED ROD ANCHOR EMBEDMENT LENGTH IN CONCRETE	THREADED ROD ANCHOR EMBEDMENT LENGTH IN MASONRY
3/8"	3"	2 3/4"	4 1/2"	3 1/2"
1/2"	4"	3 1/2"	5"	4 1/2"
5/8"	5 1/4"	4 1/2"	6 3/4"	6"
3/4"	5 3/4"	5 1/2"	6 3/4"	7"
7/8"	---	---	7"	---
1"	8"	8"	8"	---
1 1/4"	---	---	10"	---

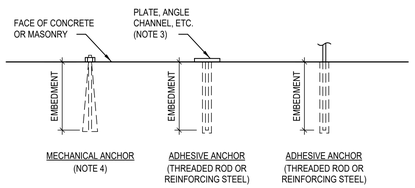

08 TYPICAL POST-INSTALLED ANCHOR AND REINFORCING STEEL SCHEDULE
SCALE: NOT TO SCALE 501-002-TYP

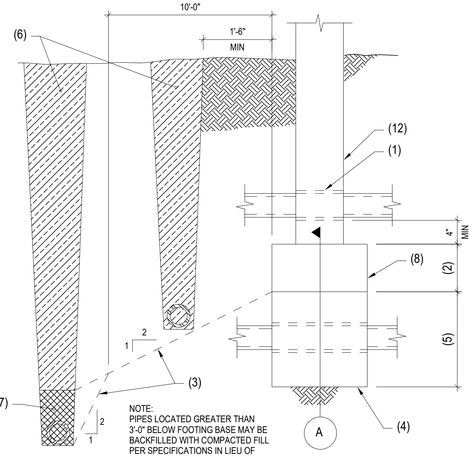

NOTE:
PIPES LOCATED GREATER THAN 3'-0" BELOW FOOTING BASE MAY BE BACKFILLED WITH COMPACTED FILL PER SPECIFICATIONS IN LIEU OF CONCRETE FILL.

05 TYPICAL PIPE THROUGH FOUNDATION WALL AND TRENCH
SCALE: NOT TO SCALE 200-005-TYP

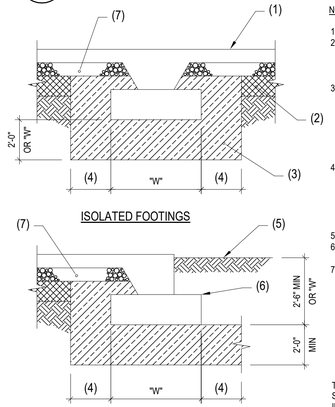

NOTES:

1. CONCRETE SLAB.
2. SCARIFY, MOISTEN OR DRY AS REQUIRED, AND COMPACT ALL SUB GRADE SOILS BENEATH SLABS.
3. COMPACTED ENGINEERED FILL. AFTER OVER EXCAVATION HAS BEEN ACCOMPLISHED, THE EXPOSED SOILS SHALL BE SCARIFIED, MOISTENED OR DRIED AS REQUIRED, AND COMPACTED.
4. MINIMUM WIDTH OF RECOM-PACTION/ENGINEERED FILL REQUIRED BEYOND THE FOOTING EDGE SHALL BE EQUAL TO 2'-0" MINIMUM OR 0.6 x DEPTH OF RECOMPACTION.
5. FINISHED GRADE.
6. SEE PLANS FOR TOP OF FOOTING ELEVATION.
7. 4" A.B.C.

TYPICAL NOTE:
SEE G.S.N. FOR ADDITIONAL INFORMATION.

06 TYPICAL EARTHWORK DETAIL
SCALE: NOT TO SCALE 200-002-TYP

NOTES:

1. LAP PER G.S.N. (24" MIN) - TYPICAL.
2. TOP OF WALL FOOTING.
3. PIPE THROUGH STEM WALL AS OCCURS - SEE TYPICAL DETAIL.
4. RETURN TO FOOTING THICKNESS AS SHOWN ON PLAN.

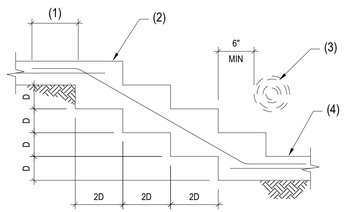

NOTE:
D = 2'-0" MAXIMUM.

03 TYPICAL REINFORCING HOOK SCHEDULE
SCALE: NOT TO SCALE 200-045-TYP

04 TYPICAL STEP IN CONCRETE FOOTING
SCALE: NOT TO SCALE 200-020-TYP

JSRa
JOHNSON SMITTHIPONG & ROSAMOND ASSOCIATES, INC.
5210 E Williams Cir ∘ Ste 600 ∘ Tucson, AZ 85711
(520) 547-7904 ∘ www.jsrarchinc.com

Consultants:

ISSUED FOR INTERIM REVIEW
THIS DOCUMENT IS NOT TO BE USED FOR REGULATORY APPROVAL, PERMIT, OR CONSTRUCTION
Vernon Rosamond
Arizona Lic #: 9793
Date: 8/13/2024

iHOUSE APARTMENT

Tonalea, AZ 86044

U. S. DEPARTMENT OF HEALTH AND HUMAN SERVICES
INDIAN HEALTH SERVICE
NAVAJO AREA OFFICE

No.	Date	Description

Issue Date:	8/13/2024
Project No:	23-390
Scale:	1" = 1'-0"
Drawn By:	KGW
Checked By:	SAM

PHASE IV (Final CD)

Sheet Title:

TYPICAL DETAILS

Sheet Number:

S501

SCHNEIDER
STRUCTURAL ENGINEERS
CREATING ELEGANT SOLUTIONS
435 East 9th Street | Tucson, AZ 85705 | 520.512.8183 | www.sastructural.com

Project Number: 124109

UNLESS THIS DRAWING IS SIGNED AND SEALED BY A LICENSED STRUCTURAL ENGINEER, IT IS A PRELIMINARY DESIGN AND SHALL NOT BE USED FOR CONSTRUCTION.

Autodesk Docs://23-390 IHS House Apt v2023/23-390 05 Strc House Apt 2023.rvt
8/12/2024 8:40:01 AM

NOTES:

1. WOOD STUDS AT WALL ENDS, INTERSECTING WALLS, JAMBS OF OPENINGS, AND AT 16" O.C.
2. 2x BLOCKING AT MID-HEIGHT OR AT 5'-0" O.C. MAX.
3. WOOD LINTEL.
4. DOUBLE TRIMMER AND JAMB STUDS AT OPENINGS GREATER THAN 6'-0" WIDE - TYPICAL U.N.O.
5. TRIMMER STUD.
6. ANCHOR BOLTS IN TREATED WOOD SILL PLATE AT FOUNDATIONS. NAILS IN SILL PLATE AT WOOD FRAMING BELOW.
7. CONTINUOUS DOUBLE TOP PLATE. SPLICE WITH (12) 16d NAILS EACH SIDE OF SPLICE U.N.O.
8. 2x WOOD SILL. DOUBLE 2x SILL AT OPENINGS GREATER THAN 8'-0"
9. SIMPSON A34 - TYPICAL AS SHOWN.
10. FRAMING CLIP AS REQUIRED.
11. DOUBLE SILL PLATE WHERE GYPCRETE FLOOR TOPPING OCCURS.

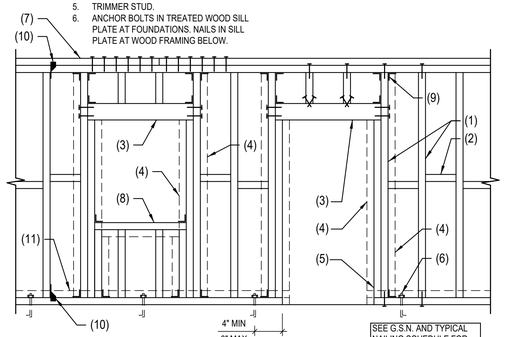

17 TYPICAL WOOD STUD EXTERIOR/BEARING WALL
SCALE: NOT TO SCALE 601-004-TYP

NOTES:

1. WOOD STUD WALL.
2. 16d AT 12" O.C. STAGGERED BOTH SIDES.
3. (2) 16d AS SHOWN.
4. (2) 16d TOENAILS, EACH EACH SIDE; EACH END.
5. RUN VERTICAL STUD UP PAST LINTEL AS SHOWN. SEE JAMB STUD FOR EXTERIOR OPENINGS.
6. 16d NAILS AT 12" O.C.
7. WOOD LINTEL.
8. DOUBLE STUDS UNDER LINTEL BEARINGS FOR OPENING WIDTHS GREATER THAN 3'-0".

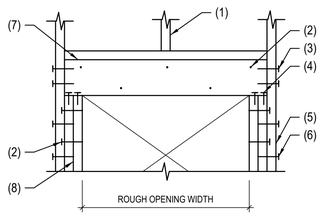

18 TYPICAL WOOD LINTEL CONSTRUCTION
SCALE: NOT TO SCALE 124109-X-DETAILS-18

NOTES:

1. WOOD STUD WALL.
2. WALL SHEATHING.
3. BRICK VENEER.
4. DUR-O-WAL DA213 VENEER ANCHOR PLATE WITH (2) #10 WOOD SCREWS EACH PLATE TO STUD.
5. DUR-O-WAL DA213QT PINTLE.

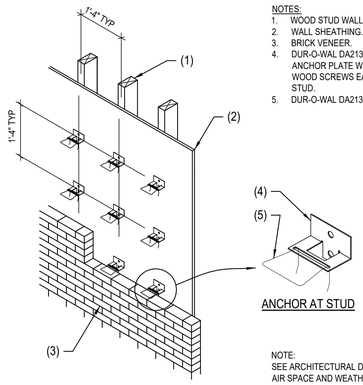

NOTE:
SEE ARCHITECTURAL DRAWINGS FOR AIR SPACE AND WEATHERPROOFING BEHIND VENEER.

19 TYPICAL VENEER ANCHOR AT WOOD STUD WALL (NON-SEISMIC)
SCALE: NOT TO SCALE 601-010-TYP

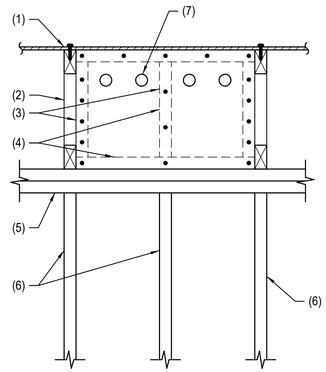

NOTES:

1. SHEATHING.
2. PREFABRICATED WOOD TRUSS.
3. 3/8" PLYWOOD SHEAR PANEL WITH 8d AT 6" O.C. PANEL EDGES AND 8d AT 12" O.C. AT INTERMEDIATE SUPPORTS.
4. 2x4 FOUR SIDES AND INTERMEDIATE.
5. CONTINUOUS DOUBLE TOP PLATE.
6. WOOD STUDS.
7. 2" DIA. VENTILATION HOLES AT 6" O.C. AS OCCURS.

14 TYPICAL PLYWOOD SHEAR PANEL
SCALE: NOT TO SCALE 601-102-TYP

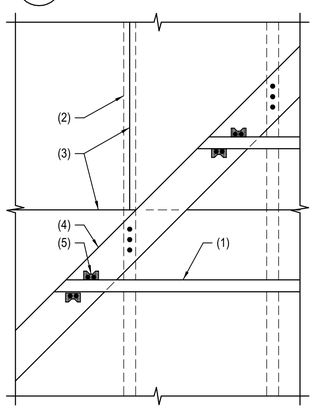

NOTES:

1. 2x OR VALLEY SET FRAMING.
2. WOOD TRUSS BELOW.
3. LINE OF SHEATHING JOINTS.
4. 2x8 LAID FLAT OVER SHEATHING WITH (3) 16d TYPICAL AT EACH TRUSS.
5. SIMPSON A34 EACH SIDE - TYPICAL.

NOTE:
SHEATHING OVER PRIMARY ROOF TRUSSES SHALL BE CONTINUOUS.

FOR CLARITY, SHEATHING OVER VALLEY FRAMING NOT SHOWN.

15 PLAN - TYPICAL VALLEY FRAMING AT PREFAB. WOOD TRUSSES
SCALE: NOT TO SCALE 650-040-TYP

NOTES:

1. 2x WOOD STUDS AT 16" O.C. MAX.
2. SOLID BLOCKING AT SHEATHING PANEL JOINTS.
3. WOOD LINTEL.
4. HOLDOWN PER SHEAR WALL SCHEDULE AT ENDS OF EACH SHEAR WALL SEGMENT. ATTACH TO FULL HEIGHT JAMB STUDS - TYP.
5. ANCHOR BOLTS IN SILL PLATE AT FOUNDATIONS/NAILS IN SILL PLATE AT WOOD FRAMING BELOW - TYPICAL.
6. HOLDOWN ANCHOR - TYPICAL.
7. SILL PLATE. 8. SHEAR WALL SHEATHING.

SEE G.S.N., SHEAR WALL SCHEDULE, AND TYPICAL WOOD STUD WALL EXTERIOR/BEARING DETAIL FOR MORE INFORMATION.

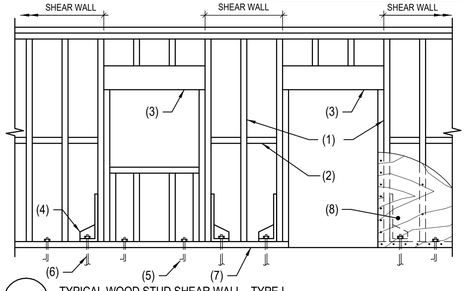

16 TYPICAL WOOD STUD SHEAR WALL - TYPE I
SCALE: NOT TO SCALE 602-001-TYP

NOTES:

1. PENETRATIONS IN THIS REGION MUST USE STEEL PIPE SCHEDULE.
2. PENETRATION.
3. EDGE FORM.

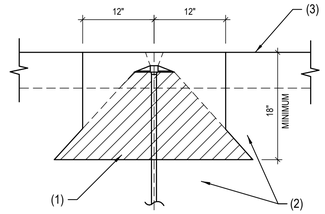

11 PENETRATIONS NEAR TENDON ANCHOR ZONE
SCALE: NOT TO SCALE 210-002

NOTES:

1. TENDON SPACING PER LAYOUT PLAN.
2. IF LESS THAN 6", SWEEP TENDON AROUND CORNER.
3. EDGE OF SLAB.

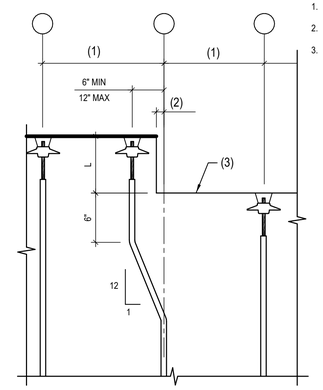

NOTE:
IF TENDON SWEEP IS NOT SHOWN ON TENDON LAYOUT PLAN, ADD "L" TO TENDON LENGTH INDICATED.

12 TYPICAL POST TENSION TENDON SWEEP
SCALE: NOT TO SCALE 210-004-TYP

NOTES:

1. DOUBLE TOP PLATE.
2. 16d AT 12" O.C.
3. WOOD STUDS.
4. (16) 16d EACH SIDE OF SPLICE - TYPICAL.

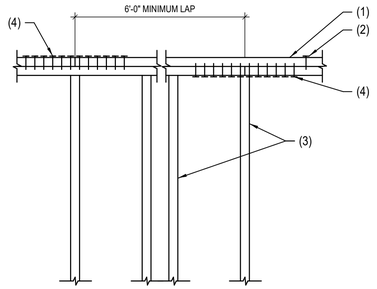

13 TYPICAL TOP PLATE SPLICE
SCALE: NOT TO SCALE 602-030-TYP

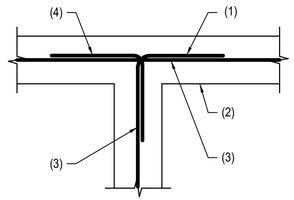

NOTES:

1. ALTERNATE BEND.
2. CONCRETE STEM WALL OR FOOTING.
3. REINFORCING PER PLANS AND/OR G.S.N.
4. CORNER BARS SAME SIZE AND SPACING AS HORIZONTAL REINFORCING. LAP PER G.S.N. (24" MINIMUM).

09 PLAN VIEW - TYPICAL CORNER REINFORCING IN CONCRETE FOOTING AND/OR STEM WALL
SCALE: NOT TO SCALE 200-030-TYP

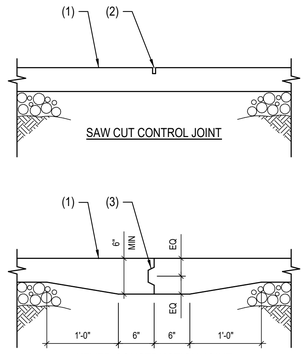

NOTES:

1. CONCRETE SLAB ON GRADE.
2. SAWCUT - 1/8" WIDE x 1/4 SLAB THICKNESS IN DEPTH. CUT SHALL BE MADE SOON ENOUGH TO PREVENT SHRINKAGE CRACKING BUT NOT SO SOON AS TO CAUSE SPALLING OF THE CONCRETE WHILE SAWING. WORK MUST BE ACCOMPLISHED WITHIN 4 HOURS OF CONCRETE PLACEMENT.
3. CONTINUOUS KEY - SEE TYPICAL KEY IN CONCRETE DETAIL.

NOTES:
A. "TOOL WET JOINT", "ZIP STRIP", ETC. SHALL MATCH SAWCUT REQUIREMENTS.
B. KEYED JOINTS NEED ONLY OCCUR AT EXPOSED EDGES DURING PLACEMENT UNLESS SPECIFICALLY NOTED ON PLANS.

10 TYPICAL JOINTS IN CONCRETE SLAB ON GRADE
SCALE: NOT TO SCALE 201-001-TYP

JSRa
JOHNSON SMITTHIPONG & ROSAMOND ASSOCIATES, INC.
5210 E Williams Cir ∘ Ste 600 ∘ Tucson, AZ 85711
(520) 547-7904 ∘ www.jsrarchinc.com

Consultants:

ISSUED FOR INTERIM REVIEW
THIS DOCUMENT IS NOT TO BE USED FOR REGULATORY APPROVAL, PERMIT, OR CONSTRUCTION
Vernon Rosamond
Arizona Lic #: 9793
Date: 8/13/2024

iHOUSE APARTMENT

Tonalea, AZ 86044

U. S. DEPARTMENT OF HEALTH AND HUMAN SERVICES
INDIAN HEALTH SERVICE
NAVAJO AREA OFFICE

No.	Date	Description

Issue Date:	8/13/2024
Project No:	23-390
Scale:	1" = 1'-0"
Drawn By:	KGW
Checked By:	SAM

PHASE IV (Final CD)

Sheet Title:

TYPICAL DETAILS

Sheet Number:

S502

SCHNEIDER STRUCTURAL ENGINEERS
CREATING ELEGANT SOLUTIONS
435 East 9th Street | Tucson, AZ 85705 | 520.512.8183 | www.sastructural.com

Project Number: 124109

UNLESS THIS DRAWING IS SIGNED AND SEALED BY A LICENSED STRUCTURAL ENGINEER, IT IS A PRELIMINARY DESIGN AND SHALL NOT BE USED FOR CONSTRUCTION.

Autodesk Docs://23-390 IHS iHouse Apt v2023/23-390 05 Strc iHouse Apt 2023.rvt
8/12/2024 8:40:01 AM

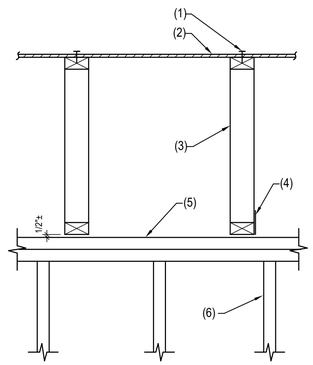

NOTES:
1. EDGE NAILING.
2. PLYWOOD SHEATHING.
3. PREFAB WOOD TRUSSES.
4. SIMPSON DTC CLIP AT 4'-0" O.C.
5. DOUBLE TOP PLATE WITH 16d AT 12" O.C.
6. 2x6 AT 24" O.C.

NOTE:
FOR EXACT LOCATION OF WALL, SEE ARCHITECTURAL DRAWINGS.

22 INTERIOR NONBEARING STUD WALLS AT WOOD TRUSSES
SCALE: NOT TO SCALE 636-071

NOTES:
1. CENTER BORED HOLES IN ALL STUDS TO GREATEST EXTENT POSSIBLE. IN NO CASE SHALL THE EDGE OF THE BORED HOLE BE NEARER THAN 5/8" TO EDGE OF STUD.
2. MINIMUM SPACING BETWEEN ANY NOTCHES OR BORINGS SHALL BE 18".
3. NO NOTCHES PERMITTED IN THE MIDDLE THIRD OF SPAN.
4. NOTCHES NOT PERMITTED WHEN "b" IS LESS THAN 3 1/2".
5. MIDDLE THIRD OF SPAN.

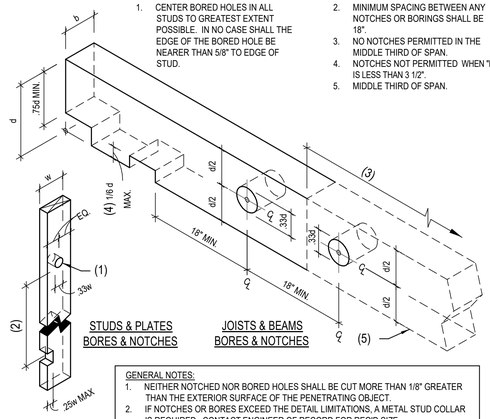

GENERAL NOTES:
1. NEITHER NOTCHED NOR BORED HOLES SHALL BE CUT MORE THAN 1/8" GREATER THAN THE EXTERIOR SURFACE OF THE PENETRATING OBJECT.
2. IF NOTCHES OR BORES EXCEED THE DETAIL LIMITATIONS, A METAL STUD COLLAR IS REQUIRED. CONTACT ENGINEER OF RECORD FOR REQ'D SIZE.
3. FOR PRE-MANUFACTURED JOISTS AND TRUSSES, CONTACT MANUFACTURER FOR ALLOWABLE PENETRATIONS.

20 TYPICAL BORED HOLES AND NOTCHES IN WOOD FRAMING
SCALE: NOT TO SCALE 601-009-TYP

CONNECTION	FASTENING	LOCATION
JOIST TO SILL OR GIRDER	(3) 8d COMMON (2 1/2"x0.131") (3) 3"x0.131" NAILS	TOENAIL
BRIDGING TO JOIST	(2) 8d COMMON (2 1/2"x0.131") (2) 3"x0.131" NAILS	TOENAIL EACH END
SILL PLATE TO JOIST OR BLOCKING	16d (3 1/2"x0.135") AT 16" O.C. 3"x0.131" NAILS AT 8" O.C.	TYPICAL FACE NAIL
TOP PLATE TO STUD	(2) 16d COMMON (3 1/2"x0.162") 3-3"x0.131" NAILS	END NAIL
STUD TO SILL PLATE	(4) 8d COMMON (2 1/2"x0.131") (4) 3"x0.131" NAILS (2) 16d COMMON (3 1/2"x0.162") (3) 3"x0.131" NAILS	TOENAIL END NAIL
BUILT-UP STUDS	16d (3 1/2"x0.135") AT 12" O.C. 3"x0.131" NAILS AT 8" O.C.	FACE NAIL
DOUBLE TOP PLATES	16d (3 1/2"x0.135") AT 16" O.C. 3"x0.131" NAILS AT 12" O.C. (8) 16d COMMON (3 1/2"x0.162") (12) 3"xO.131" NAILS	TYPICAL FACE NAIL LAP SPLICE
BLOCKING BETWEEN JOISTS OR RAFTERS TO TOP PLATE	(3) 8d COMMON (2 1/2"x0.131") (3) 3"x0.131" NAILS	TOENAIL
RIM JOIST TO TOP PLATE	8d (2 1/2"x0.131") AT 6" O.C. 3"x0.131" NAIL AT 6" O.C.	TOENAIL
TOP PLATES, LAPS AND INTERSECTIONS	(2) 16d COMMON (3 1/2"x0.162") (3) 3"x0.131" NAILS	FACE NAIL
CONT. HEADER, TWO PIECES	16d COMMON (3 1/2"x0.162")	16" O.C. ALONG EDGE
CONT. HEADER TO STUD	(4) 8d COMMON (2 1/2"x0.131")	TOENAIL
WOOD JOIST TO PLATE	(3) 8d COMMON (2 1/2"x0.131") (3) 3"x0.131" NAILS	TOENAIL
BUILT-UP CORNER STUDS	16d COMMON (3 1/2"x0.162") 3"x0.131" NAILS	24" O.C. 16" O.C.
BUILT-UP GIRDER AND BEAMS	20d COMMON (4"x0.192") 32" O.C. 3"x0.131" NAIL AT 24" O.C. (2) 20d COMMON (4"x0.192") (3) 3"x0.131" NAILS	FACE NAIL AT TOP AND BOTTOM STAGGERED ON OPPOSITE SIDES FACE NAIL AT ENDS AND AT EACH SPLICE

NOTES:
1. COMMON OR BOX NAILS ARE PERMITTED TO BE USED EXCEPT WHERE OTHERWISE STATED.
2. STAPLES SHALL HAVE A MINIMUM CROWN OF 7/16".
3. FASTENING SCHEDULE APPLIES U.N.O., WHERE DIFFERENCES OCCUR, GREATER REQUIREMENT GOVERNS.

23 TYPICAL WOOD FASTENING
SCALE: NOT TO SCALE 601-008-TYP

NOTES:
1. WOOD STUD WALL.
2. SHEAR WALL SHEATHING AS OCCURS.
3. HOLDOWN PER SHEAR WALL SCHEDULE AT SHEAR WALL END.
4. 16d NAILS AT 12" O.C.
5. SHEAR WALL EDGE ATTACHMENT U.N.O.
6. 2x4 STUDS.

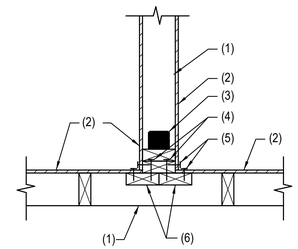

21 SHEAR WALL AT INTERSECTING SHEAR WALL
SCALE: NOT TO SCALE 602-035

SCHNEIDER
STRUCTURAL ENGINEERS
CREATING ELEGANT SOLUTIONS
435 East 9th Street | Tucson, AZ 85705 | 520.512.8183 | www.sastructural.com
Project Number: 124109

UNLESS THIS DRAWING IS SIGNED AND SEALED BY A LICENSED STRUCTURAL ENGINEER, IT IS A PRELIMINARY DESIGN AND SHALL NOT BE USED FOR CONSTRUCTION.

JSRa
JOHNSON SMITTHIPONG & ROSAMOND ASSOCIATES, INC.
5210 E Williams Cir • Ste 600 • Tucson, AZ 85711
(520) 547-7904 • www.jsrarchinc.com

Consultants:

ISSUED FOR INTERIM REVIEW
THIS DOCUMENT IS NOT TO BE USED FOR REGULATORY APPROVAL, PERMIT, OR CONSTRUCTION
Vernon Rosamond
Arizona Lic #: 9793
Date: 8/13/2024

iHOUSE APARTMENT

Tonalea, AZ 86044

U. S. DEPARTMENT OF HEALTH AND HUMAN SERVICES
INDIAN HEALTH SERVICE
NAVAJO AREA OFFICE

No.	Date	Description

Issue Date:	8/13/2024
Project No:	23-390
Scale:	1" = 1'-0"
Drawn By:	KGW
Checked By:	SAM

PHASE IV (Final CD)

Sheet Title:

TYPICAL DETAILS

Sheet Number:

S503

Autodesk Docs://23-390 IHS iHouse Apt \2023\23-390 05 Strc iHouse Apt 2023.rvt
8/12/2024 8:40:01 AM

NOTES:

1. SMOOTH TENDON TRANSITION OVER 6 TIMES SLAB STEP THICKNESS.
2. (1) #4 CONTINUOUS.
3. OPTIONAL COLD JOINT. ROUGHEN TO 1/4" MIN OR PLACE #4 x24" DOWEL AT 24" O.C. CENTERED AT JOINT.
4. SEE ARCHITECTURAL DRAWINGS FOR DEPTH (6" MAX).

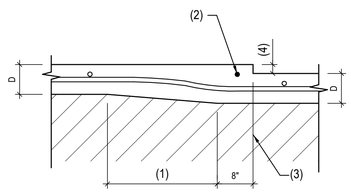

106 SLAB STEP AT POST TENSION SLAB ON GRADE

SCALE: NOT TO SCALE 216-001-TYP

NOTES:

1. WOOD STUD WALL BEYOND.
2. PT ANCHORAGE PER TYP. DETAIL 101.
3. CENTER TENDONS IN SLAB THICKNESS.
4. (1) #5 CONTINUOUS.
5. #3 AT 18" O.C. WITH STD. HOOK AS SHOWN. (12" LONG WITH 12" BEND) HOOK MAY BE HORIZONTAL INTO THE CURB.
6. OVEREXCAVATED AND RECOMPACTED ENGINEERED FILL.
7. EXTEND FOOTING WHERE SHOWN ON PLAN.
8. CAULK JOINT PER ARCHITECT.
9. INSULATION PER ARCHITECT.
10. CONCRETE APRON PER PLAN.
11. FINISHED GRADE OR CONCRETE SLAB AS OCCURS.
12. CONCRETE TOE WITH #4 x CONT. TOP AND BOTTOM.
13. TOP OF TOE TO BE TROWELED SMOOTH WITH 30# FELT ON TOP TO PREVENT BOND.

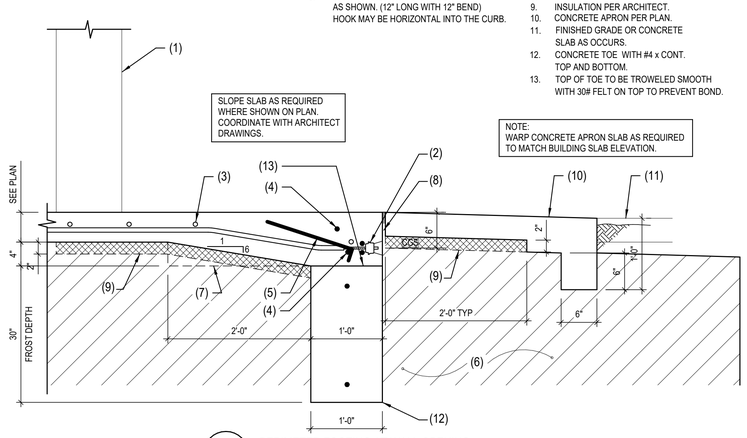

103 PERIMETER FOOTING AT WALL OPENING

SCALE: NOT TO SCALE 117149-S3.0-103

NOTES:

1. PT ANCHORAGE PER TYP DETAIL 101.
2. 3/4" DIA. x 1'-4" SMOOTH DOWELS AT 12" O.C. CENTERED AT EXPANSION JOINT PROVIDE PLASTIC SHEATHING OVER ONE END OF SMOOTH DOWEL. TAPE END TO PREVENT CONCRETE FROM BINDING WITH SMOOTH DOWELS.
3. CENTER TENDONS ON SLAB.
4. #4 AT 8" O.C. EACH WAY
5. CONCRETE CLOSURE POUR. PLACE CONCRETE 48 HOURS MINIMUM AFTER STRESSING.
6. 1/2" EXPANSION JOINT
7. (1) #4 CONTINUOUS IN BOTTOM

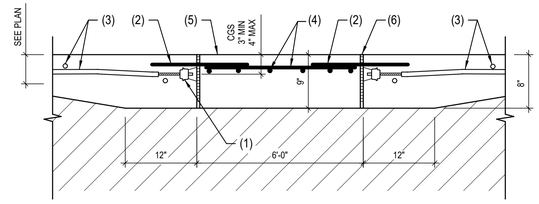

NOTES:

1. USE FORMS TO SET SMOOTH DOWELS TO MAINTAIN ACCURATE POSITIONING BOTH LEVEL AND PERPENDICULAR TO JOINT.
2. SLAB SEPARATION MAY OCCUR AT JOINT. DO NOT PENETRATE SLAB WITHOUT ISOLATION. FLOOR COVERINGS MAY ALSO REQUIRE ISOLATION JOINT.

104 CLOSURE POUR AT POST TENSION SLAB ON GRADE

SCALE: NOT TO SCALE 210-010

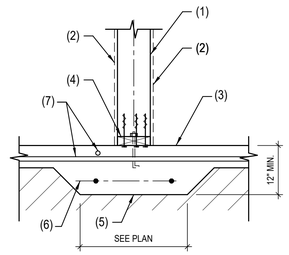

NOTES:

1. WOOD STUD WALL.
2. SHEATHING PER SHEAR WALL SCHEDULE.
3. CONCRETE SLAB ON GRADE.
4. 2x CONTINUOUS PLATE WITH 1/2" DIA. ANCHOR BOLTS AT 24" O.C. U.N.O. - INSERT OR EXPANSION BOLTS MAY BE USED IN LIEU OF ANCHOR BOLTS.
5. CONTINUOUS TRENCH FOOTING TO RECEIVE ANCHOR BOLT- CENTER UNDER WALL.
6. (2) #5 CONTINUOUS.
7. CENTER TENDONS IN SLAB.
8. (3) SDWC 15450 AT EACH STUD.

105 BEARING AND SHEAR WALL AT PT SLAB

SCALE: NOT TO SCALE 117149-S3.0-105

NOTES:

1. FORM BOARD. 13/16" DIA. HOLE FOR TENDON EXTENSION AT STRESSING END
2. POST TENSION ANCHORAGE WITH SPLIT WEDGES PER G.S.N. PRESET AT FIXED END. NAIL VERTICALLY TO FORM BOARD
3. REUSABLE PLASTIC GROMMET AT STRESSING END. GROUT POCKET AFTER STRESSING PER G.S.N.
4. PLASTIC SHEATHING. STRIP BACK 1" MAX AT STRESSING END AND 12" MAX AT FIXED END
5. TENDON PLACED BELOW AND PARALLEL TO FORM BOARD. WIRE TENDONS PER G.S.N.
6. CENTER OF GRAVITY OF PT STRAND (CGS) AT ANCHORAGE AS SHOWN ON DETAILS. EXTEND STRANDS 18" MIN AT STRESSING END. CUT PER G.S.N. AFTER STRESSING
7. SMOOTH CURVE TRANSITION OF TENDONS TO SLAB MID-DEPTH U.N.O.
8. (1) #4 CONTINUOUS OR #4 x3'-0" BENT HOOK ABOVE AND BELOW EACH END OF STRAND - TYP. AT EDGE OF SLAB.

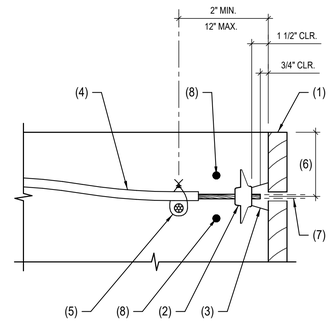

101 TYPICAL POST TENSION TENDON ANCHOR

SCALE: NOT TO SCALE 210-001

NOTES:

1. WOOD STUD WALL.
2. PT ANCHORAGE PER TYP. DETAIL 101.
3. CENTER TENDONS IN SLAB THICKNESS.
4. (1) #5 CONTINUOUS.
5. #3 AT 18" O.C. WITH STD. HOOK AS SHOWN. (12" LONG WITH 12" BEND) HOOK MAY BE HORIZONTAL INTO THE CURB.
6. OVEREXCAVATED AND RECOMPACTED ENGINEERED FILL.
7. VENEER PER ARCHITECTURAL.
8. CAULK JOINT PER ARCHITECT.
9. INSULATION PER ARCHITECT .
10. CONCRETE APRON PER PLAN.
11. FINISHED GRADE OR CONCRETE SLAB AS OCCURS.
12. EXTEND FOOTING WHERE SHOWN ON PLAN.
13. INTERIOR STUD WALL PER ARCHITECT.
14. CONCRETE TOE WITH #4 x CONT. TOP AND BOTTOM.
15. TOP OF TOE TO BE TROWELED SMOOTH WITH 30# FELT ON TOP TO PREVENT BOND.
16. 2x CONTINUOUS PLATE WITH 1/2" DIA. ANCHOR BOLTS AT 48" O.C. U.N.O.
17. SIMPSON SDWC15450 AT EACH STUD.
18. 4" AGGREGATE BASE COURSE PER GEOTECHNICAL EXPLORATION REPORT.

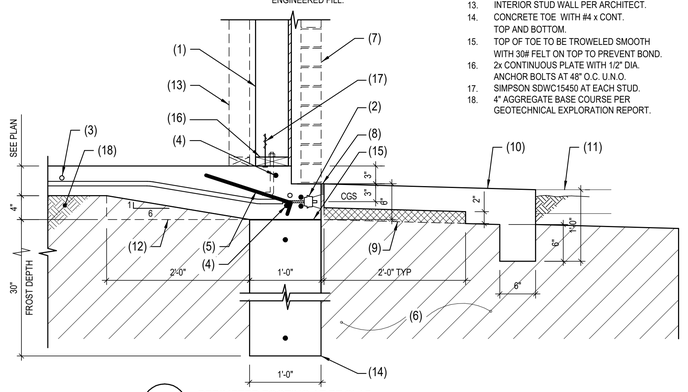

102 PERIMETER FOOTING AT PT SLAB

SCALE: NOT TO SCALE 117149-S3.0-102

SCHNEIDER STRUCTURAL ENGINEERS

CREATING ELEGANT SOLUTIONS

435 East 9th Street | Tucson, AZ 85705 | 520.512.8183 | www.sastructural.com

Project Number: 124109

UNLESS THIS DRAWING IS SIGNED AND SEALED BY A LICENSED STRUCTURAL ENGINEER, IT IS A PRELIMINARY DESIGN AND SHALL NOT BE USED FOR CONSTRUCTION.

JSRa

JOHNSON SMITTHIPONG & ROSAMOND ASSOCIATES, INC.

5210 E Williams Cir ∘ Ste 600 ∘ Tucson, AZ 85711
(520) 547-7904 ∘ www.jsrarchinc.com

Consultants:

ISSUED FOR INTERIM REVIEW

THIS DOCUMENT IS NOT TO BE USED FOR REGULATORY APPROVAL, PERMIT, OR CONSTRUCTION

Vernon Rosamond
Arizona Lic #: 9793
Date: 8/13/2024

iHOUSE APARTMENT

Tonalea, AZ 86044

U. S. DEPARTMENT OF HEALTH AND HUMAN SERVICES
INDIAN HEALTH SERVICE
NAVAJO AREA OFFICE

No.	Date	Description

Issue Date:	8/13/2024
Project No:	23-390
Scale:	1" = 1'-0"
Drawn By:	KGW
Checked By:	SAM

PHASE IV (Final CD)

Sheet Title:

FOUNDATION DETAILS

Sheet Number:

S521

Autodesk Docs://23-390 IHS House Apt v2023/23-390 05 Strc House Apt 2023.rvt
8/12/2024 8:40:02 AM

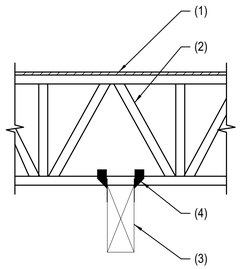

NOTES:

1. SHEATHING.
2. WOOD TRUSS.
3. WOOD BEAM.
4. (2) SIMPSON H3 AT EACH TRUSS.

209 WOOD TRUSS OVER WOOD BEAM

SCALE: NOT TO SCALE 124109-X-DETAILS-209

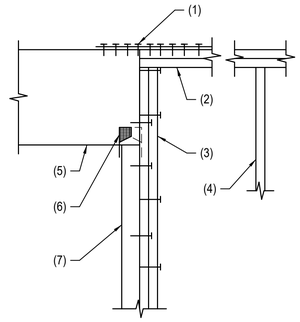

NOTES:

1. SIMPSON ST6236 STRAP.
2. DOUBLE 2x TOP PLATE.
3. DOUBLE 2x STUDS.
4. WOOD STUDS.
5. WOOD BEAM.
6. SIMPSON H3 - ALTERNATE SIDES.
7. WOOD POST.

210 WOOD BEAM AND WOOD STUDS AT WOOD POST

SCALE: NOT TO SCALE 637-044

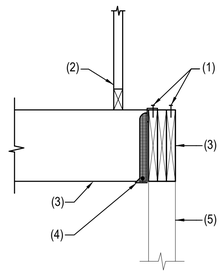

NOTES:

1. EDGE NAILING.
2. PLYWOOD SHEATHING.
3. WOOD LINTEL.
4. SIMPSON HU TYPE BEAM HANGER.
5. WOOD STUD WALL BEYOND.

206 WOOD BEAM AT WOOD BEAM

SCALE: NOT TO SCALE 636-020

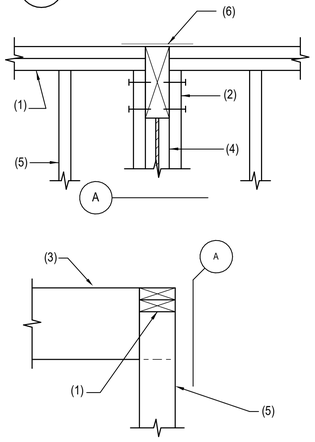

NOTES:

1. DOUBLE 2x TOP PLATE.
2. RUN STUD ALONG SIDE OF BEAM AND NAIL WITH (6) 16d MINIMUM.
3. WOOD BEAM.
4. MULTIPLE STUD BENEATH BEAM BEARING WITH PLYWOOD FILLER AS REQUIRED - NAIL TOGETHER WITH 16d AT 12" O.C.
5. WOOD STUD.
6. SIMPSON CS20 x 12" LONG.

NOTE:
FRAMING ABOVE NOT SHOWN FOR CLARITY.

207 TYPICAL BEAM BEARING AT STUD WALL

SCALE: NOT TO SCALE 637-051

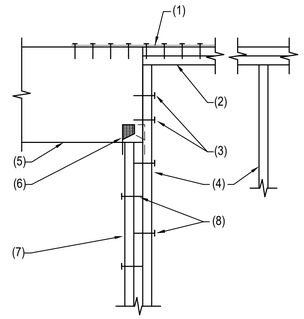

NOTES:

1. SIMPSON CS16 x 24" LONG STRAP, FILL ALL NAIL HOLES.
2. DOUBLE 2x TOP PLATE.
3. (2) 16d TO BEAM.
4. WOOD STUDS.
5. WOOD BEAM.
6. SIMPSON H2.5T EACH SIDE OF BEAM.
7. DOUBLE STUDS AT BEAM BEARING.
8. 16d AT 12" O.C. - STAGGERED.

203 WOOD BEAM AT WOOD STUD WALL

SCALE: NOT TO SCALE 637-043

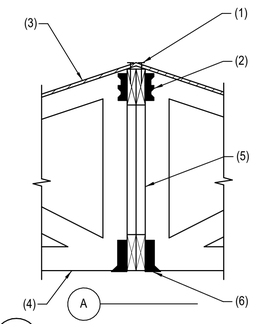

NOTES:

1. EDGE NAILING.
2. SIMPSON A35.
3. PLYWOOD SHEATHING.
4. WOOD TRUSS.
5. PREFAB WOOD GIRDER TRUSS.
6. TRUSS HANGER PER TRUSS MANUFACTURER.
7. SIMPSON H3 AT EACH TRUSS.

204 PREFAB WOOD TRUSS AT GIRDER TRUSS

SCALE: NOT TO SCALE 650-013

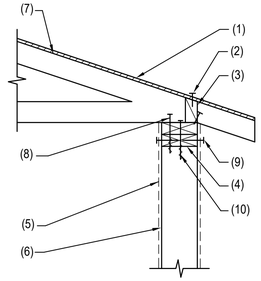

NOTES:

1. PLYWOOD SHEATHING.
2. EDGE NAILING.
3. 2x SOLID BLOCKING WITH (3) 16d PER BLOCK.
4. DOUBLE 2x TOP PLATE WITH 16d AT 12" O.C.
5. SHEATHING MATERIAL AS OCCURS.
6. WOOD STUD WALL.
7. WOOD TRUSS.
8. SIMPSON SDWC15600 EACH TRUSS.
9. NAILING PER SHEAR WALL SCHEDULE.
10. SIMPSON SDWC15450 AT EACH STUD.

201 WOOD TRUSS AT WOOD STUD WALL

SCALE: NOT TO SCALE 656-060

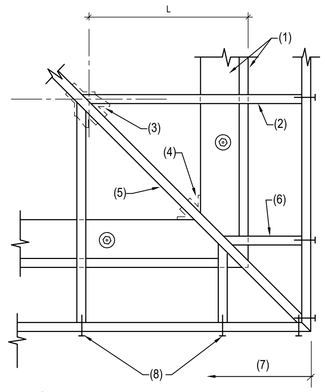

NOTES:

1. WOOD BLOCKING AND PLATE BELOW
2. JACK TRUSSES. INSTALL SIMPSON SUR/SUL26 HANGER AT BOTTOM CHORD. WHEN "L" EXCEEDS 6'-0". NAIL TOP CHORD WITH (2) 16d TO HIP JACK.
3. SIMPSON SUR/SUL26 AS REQUIRED.
4. SIMPSON H2.5 EACH SIDE.
5. HIP JACK TRUSS.
6. TYPICAL JACK TRUSS WITH (2) 16d TO HIP JACK AT TOP AND BOTTOM CHORD.
7. CONTINUOUS FASCIA (DO NOT SPLICE WITHIN 8'-0" FROM CORNER - EACH WAY).
8. (3) 16d - TYPICAL AT EACH TRUSS.

202 PLAN - WOOD JACK TRUSSES AT HIP JACK TRUSS

SCALE: NOT TO SCALE 650-030

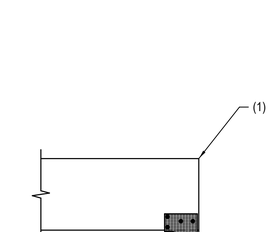

NOTES:

1. WOOD BEAM.
2. SIMPSON ACE TWIN POST CAP - TYPICAL.
3. WOOD COLUMN.

211 WOOD BEAM AT WOOD COLUMN

SCALE: NOT TO SCALE 637-010

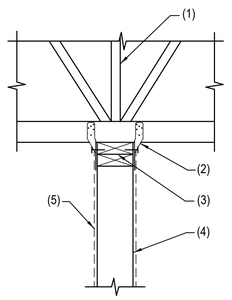

NOTES:

1. WOOD TRUSS.
2. (2) SIMPSON H10 AT EACH TRUSS.
3. DOUBLE 2x CONT. TOP PLATE WITH 16d AT 12" O.C.
4. WOOD STUD WALL.
5. SHEATHING AS OCCURS.

208 WOOD TRUSS OVER WOOD STUD WALL

SCALE: NOT TO SCALE 656-050

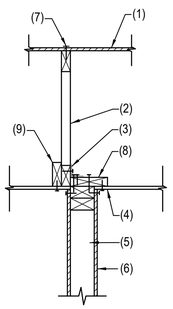

NOTES:

1. PLYWOOD SHEATHING.
2. WOOD TRUSS.
3. SIMPSON A35 AT 16" O.C.
4. GYPSUM BOARD CEILING.
5. WOOD STUD WALL.
6. SHEATHING AND ATTACHMENTS AS REQUIRED.
7. DOUBLE EDGE NAILING.
8. 2x10 CONTINUOUS WITH (2) ROWS 16d NAILS AT 12" O.C.
9. WOOD NAILER AS NEEDED.

205 SHEARWALL PARALLEL TO TRUSS

SCALE: NOT TO SCALE 656-091

JSRa
JOHNSON SMITTHIPONG & ROSAMOND ASSOCIATES, INC.
5210 E Williams Cir • Ste 600 • Tucson, AZ 85711
(520) 547-7904 • www.jsrarchinc.com

Consultants:

ISSUED FOR INTERIM REVIEW
THIS DOCUMENT IS NOT TO BE USED FOR REGULATORY APPROVAL, PERMIT, OR CONSTRUCTION
Vernon Rosamond
Arizona Lic #: 9793
Date: 8/13/2024

iHOUSE APARTMENT

Tonalea, AZ 86044

U. S. DEPARTMENT OF HEALTH AND HUMAN SERVICES
INDIAN HEALTH SERVICE
NAVAJO AREA OFFICE

No.	Date	Description

Issue Date:	8/13/2024
Project No:	23-390
Scale:	1" = 1'-0"
Drawn By:	KGW
Checked By:	SAM

PHASE IV (Final CD)

Sheet Title:

ROOF FRAMING DETAILS

Sheet Number:

S551

SCHNEIDER
STRUCTURAL ENGINEERS
CREATING ELEGANT SOLUTIONS
435 East 9th Street | Tucson, AZ 85705 | 520.512.8183 | www.sastructural.com

Project Number: 124109

UNLESS THIS DRAWING IS SIGNED AND SEALED BY A LICENSED STRUCTURAL ENGINEER, IT IS A PRELIMINARY DESIGN AND SHALL NOT BE USED FOR CONSTRUCTION.

Autodesk Docs://23-390 IHS iHouse Apt v2023/23-390 05 Strc iHouse Apt 2023.rvt
8/12/2024 8:40:02 AM

SHEARWALL (SW) SCHEDULE (WOOD FRAMING)

821

MARK	SHEATHING MATERIAL AND ATTACHMENT				SILL PLATE ATTACHMENT		HOLDOWN	REMARKS
	SHEATHING TYPE	SHEATHING THICKNESS	NUMBER OF FACES	EDGE ATTACHMENT	ATTACHMENT AT FOUNDATION	ATTACHMENT AT FRAMING		
SW1	G.W.B.	1/2"	1	8d COOLER NAILS AT 7" O.C. EDGES AND FIELD	1/2" DIA. ANCHORS AT 48" O.C. OR HILTI "DN" SHOT PIN AT 16" O.C.	---	---	---
SW2	W.S.P.	1/2"	1	8d NAILS AT 6" O.C. 12" O.C. FIELD	1/2" DIA. ANCHORS AT 32" O.C.	---	---	---

GENERAL NOTES:
1. SEE TYPICAL DETAILS FOR ADDITIONAL INFORMATION.
2. WHERE SHEATHING IS REQUIRED ON BOTH FACES OF WALL AND NAIL SPACING IS LESS THAN 6" O.C. EACH FACE, PANEL JOINTS SHALL BE OFFSET TO FALL ON DIFFERENT FRAMING MEMBERS, OR COMMON FRAMING MEMBER SHALL BE 3x OR THICKER AND NAILS ON EACH FACE SHALL BE STAGGERED.
3. WHERE 8d NAILS ARE SPACED AT 2" O.C. OR WHERE 10d NAILS ARE SPACED AT 3" O.C. OR LESS, FRAMING MEMBER SHALL BE 3x OR THICKER AND NAILS SHALL BE STAGGERED.
4. (2) 2x STUDS STITCH-NAILED WITH 2 ROWS OF 16d NAILS AT 12" O.C. STAGGERED MAY BE SUBSTITUTED FOR 3x STUDS.
5. MAXIMUM STUD SPACING IS 16" O.C.
6. ORIENT PANELS HORIZONTALLY OR VERTICALLY. ALL PANEL EDGES SHALL BE BACKED WITH 2x FRAMING (3x AS REQUIRED). BLOCK BETWEEN STUDS AT HORIZONTAL PANEL EDGES, U.N.O. AT GYPSUM BOARD SHEAR WALLS ONLY, BLOCKING BETWEEN PANEL EDGES IS NOT REQUIRED.
7. EDGE ATTACHMENT SPACING APPLIES TO ALL STUDS AT PANEL EDGES, TOP & BOTTOM PLATES AND BLOCKING AT PANEL EDGES. LOCATE NAILS 3/8" MIN FROM EDGES.
8. NAILS AT GYPSUM BOARD SHEATHING SHALL BE COOLER OR WALLBOARD NAILS. NAILS SHALL BE COMMON OR GALVANIZED (HOT DIPPED OR TUMBLED) BOX NAILS. #6 TYPE S OR W DRYWALL SCREWS MAY BE SUBSTITUTED FOR NAILS AT GYPSUM BOARD SHEATHING.
9. STAPLES MAY BE SUBSTITUTED FOR NAILS AT GYPSUM BOARD SHEATHING AT SAME ATTACHMENT SPACINGS. STAPLES MAY BE SUBSTITUTED FOR NAILS AT WOOD STRUCTURAL PANELS WHEN NAILS ARE SPACED AT 6" O.C., WITH STAPLES SPACED AT 6" O.C. AT 1/2 THE INDICATED EDGE ATTACHMENT SPACING. STAPLES SHALL BE 1 1/2" x 16 GAGE WITH A MINIMUM CROWN WIDTH OF 7/16".
10. SILL PLATE ATTACHMENT AT FRAMING. ALSO APPLIES TO ATTACHMENT OF FRAMING ABOVE WALL TO WALL TOP PLATE U.N.O.

COLUMN (C) SCHEDULE

810

MARK	SIZE	BASE CONNECTION	REMARKS
C1	WOOD 6x6	(2) SIMPSON H3 ATTACHED TO 2x SILL PLATE	---

BEAM (B) SCHEDULE

830

MARK	SIZE	CAMBER	END CONNECTION	REMARKS
B1	WOOD 6x14	---	---	---

LINTEL (LT) SCHEDULE

845

MARK	TYPE	LINTEL SIZE	TRIMMER STUDS	JAMB STUDS	REMARKS
LT1	WOOD	(2) 2x8	(2) 2x4	(2) 2x4	SEE TYPICAL DETAIL 17
LT2	WOOD	(3) 2x8 (INTERIOR) (3) 2x8 (EXTERIOR)	(2) 2x6 (INTERIOR) (2) 2x4 (EXTERIOR)	(2) 2x6 (INTERIOR) (2) 2x4 (EXTERIOR)	SEE TYPICAL DETAIL 17
LT3	WOOD	(3) 2x12	(2) 2x4	(4) 2x4	SEE TYPICAL DETAIL 17
LT4	WOOD	GLB 5 1/8" x 12"	(2) 2x4	(4) 2x4	SEE TYPICAL DETAIL 17

NOTES:
1. SCHEDULES APPLY U.N.O. SEE TYPICAL DETAILS FOR ADDITIONAL INFORMATION.
2. JAMB STUDS SPECIFIED IN SCHEDULE APPLY ONLY AT EXTERIOR WALL FRAMING. PROVIDE SINGLE 2x JAMB STUD AT INTERIOR WALL FRAMING, U.N.O.

JSRa
JOHNSON SMITTHIPONG & ROSAMOND ASSOCIATES, INC.
5210 E Williams Cir • Ste 600 • Tucson, AZ 85711
(520) 547-7904 • www.jsrarchinc.com

Consultants:

ISSUED FOR INTERIM REVIEW
THIS DOCUMENT IS NOT TO BE USED FOR REGULATORY APPROVAL, PERMIT, OR CONSTRUCTION
Vernon Rosamond
Arizona Lic #: 9793
Date: 8/13/2024

iHOUSE APARTMENT

Tonalea, AZ 86044

U. S. DEPARTMENT OF HEALTH AND HUMAN SERVICES
INDIAN HEALTH SERVICE
NAVAJO AREA OFFICE

No.	Date	Description

Issue Date:	8/13/2024
Project No:	23-390
Scale:	12" = 1'-0"
Drawn By:	KGW
Checked By:	SAM

PHASE IV (Final CD)

Sheet Title:

SCHEDULES

Sheet Number:

S601

SCHNEIDER STRUCTURAL ENGINEERS
CREATING ELEGANT SOLUTIONS
435 East 9th Street | Tucson, AZ 85705 | 520.512.8183 | www.sastructural.com

Project Number: 124109

UNLESS THIS DRAWING IS SIGNED AND SEALED BY A LICENSED STRUCTURAL ENGINEER, IT IS A PRELIMINARY DESIGN AND SHALL NOT BE USED FOR CONSTRUCTION.

Autodesk Docs://23-390 IHS iHouse Apt v2023/23-390 05 Strc iHouse Apt 2023.rvt
8/12/2024 8:40:02 AM

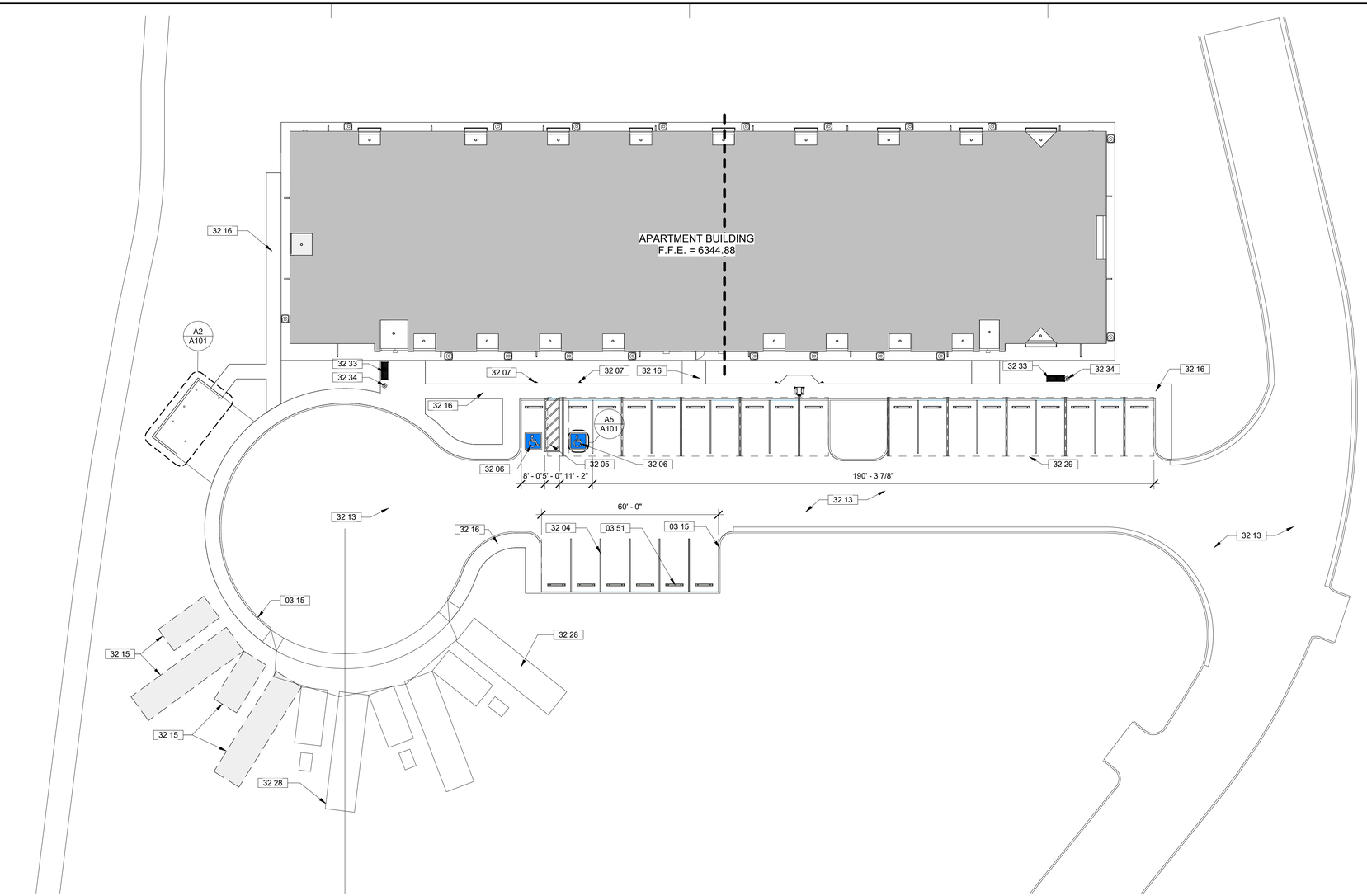

B1 SITE PLAN
1" = 20'-0"

GENERAL NOTES

A	REFER TO CIVIL DRAWINGS FOR FINISH FLOOR ELEVATIONS
B	FOR GRADING AND PAVING EQUIPMENTS - REF CIVIL DRAWINGS
C	FOR SITE UTILITIES - REF CIVIL & ELECTRICAL DRAWINGS

KEYNOTES

Key #	Keynote Text
03 15	CONCRETE CURB.
03 51	CONCRETE WHEEL STOP - TYPICAL AT ALL SPACES.
32 04	4" WIDE PARKING STRIPE - WHITE.
32 05	4" WIDE STRIPES @ 24" O.C. DIAGONAL ACCESSIBLE AISLE - WHITE.
32 06	PAINTED ACCESSIBLE SYMBOL.
32 07	ACCESSIBLE PARKING SIGN, REFERENCE CIVIL.
32 13	ASPHALT PAVING - REFERENCE CIVIL.
32 15	FUTURE RV PARKING SPACES.
32 16	CONCRETE SIDEWALK - REFERENCE CIVIL.
32 28	CONCRETE RV PARKING SPACE.
32 29	PARKING CANOPY.
32 33	METAL BENCH.
32 34	METAL TRASH CAN.

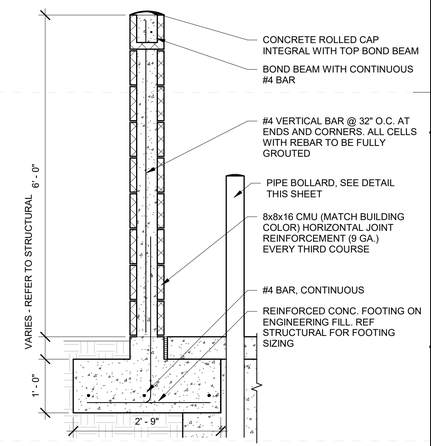

B5 TRASH ENCLOSURE WALL
3/4" = 1'-0"

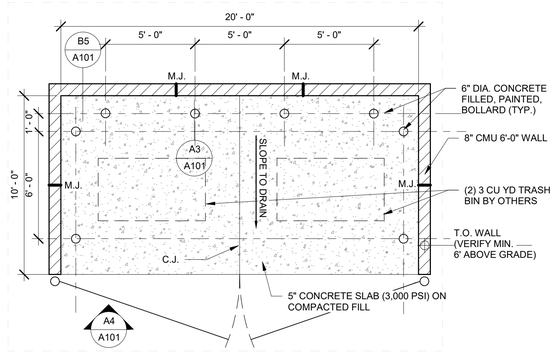

A2 TRASH ENCLOSURE
1/4" = 1'-0"

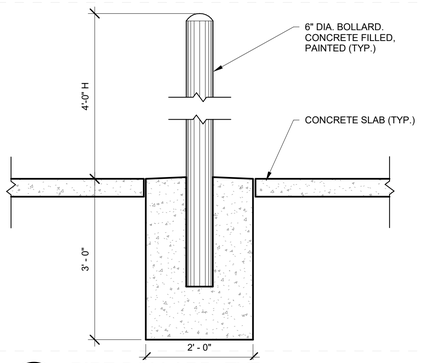

A3 PIPE BOLLARD, TYP
3/4" = 1'-0"

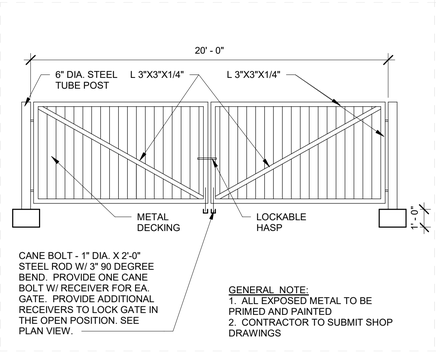

A4 DUMPSTER/GENERATOR GATE
1/4" = 1'-0"

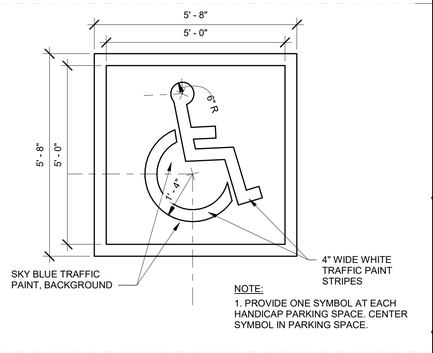

A5 HANDICAP PAVING GRAPHIC
1/2" = 1'-0"

JSRa
JOHNSON SMITTHIPONG & ROSAMOND ASSOCIATES, INC.
5210 E Williams Cir • Ste 600 • Tucson, AZ 85711
(520) 547-7904 • www.jsra.com

Consultants:

ISSUED FOR INTERIM REVIEW
THIS DOCUMENT IS NOT TO BE USED FOR REGULATORY APPROVAL, PERMIT, OR CONSTRUCTION
Vernon Rosamond
Arizona Lic #: 9793
Date: 8/13/24

iHOUSE APARTMENT

Tonalea, AZ 86044

U. S. DEPARTMENT OF HEALTH AND HUMAN SERVICES
INDIAN HEALTH SERVICE
NAVAJO AREA OFFICE

No.	Date	Description

Issue Date:	8/13/24
Project No:	23-390
Scale:	As indicated
Drawn By:	BARBOZA
Checked By:	HARGREAVES

PHASE IV (Final CD)

Sheet Title:

SITE PLAN

Sheet Number:

A101

Autodesk Docs://23-390 IHS iHouse Apt v2023/23-390 06 Arch iHouse Apt 2023.rvt
8/13/2024 2:30:21 PM

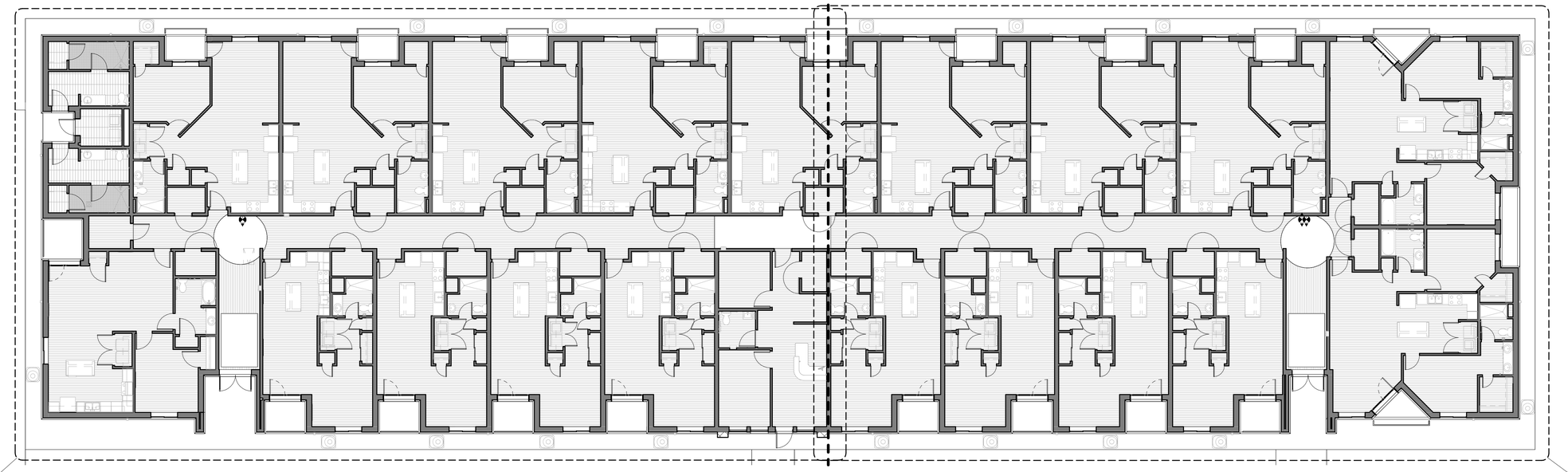

C1 A122

A2 A122

C1 OVERALL FLOOR PLAN

3/32" = 1'-0"

CHASE INTERIOR

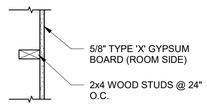

NOTE:
* 5/8" TYPE "X" GLASS MAT WATER RESISTANT GYPSUM BOARD @ SHOWER/TUB SURROUNDS, LAUNDRY ROOM APPLIANCE WALL, LAUNDRY SINK SUPPLY SIDE WALL AND ADJACENT WALL TO LAUNDRY SINK.

4.C WALL TYPE 4.C

1" = 1'-0"

INTERIOR INTERIOR

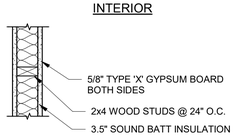

STC: 51 RATED DESIGN; NATIONAL GYPSUM DESIGN # NGC 2011071

NOTE:
* 5/8" TYPE "X" GLASS MAT WATER RESISTANT GYPSUM BOARD @ SHOWER/TUB SURROUNDS, LAUNDRY ROOM APPLIANCE WALL, LAUNDRY SINK SUPPLY SIDE WALL AND ADJACENT WALL TO LAUNDRY SINK.

4.S WALL TYPE 4.S

1" = 1'-0"

INTERIOR INTERIOR

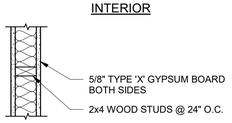

NOTE:
* 5/8" TYPE "X" GLASS MAT WATER RESISTANT GYPSUM BOARD @ SHOWER/TUB SURROUNDS, LAUNDRY ROOM APPLIANCE WALL, LAUNDRY SINK SUPPLY SIDE WALL AND ADJACENT WALL TO LAUNDRY SINK.

4.1 WALL TYPE 4.1

1" = 1'-0"

INTERIOR INTERIOR

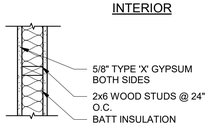

NOTE:
* 5/8" TYPE "X" GLASS MAT WATER RESISTANT GYPSUM BOARD @ SHOWER/TUB SURROUNDS, LAUNDRY ROOM APPLIANCE WALL, LAUNDRY SINK SUPPLY SIDE WALL AND ADJACENT WALL TO LAUNDRY SINK.

4.F WALL TYPE 4.F

1" = 1'-0"

UNIT 8" S/W SIDE SECTION

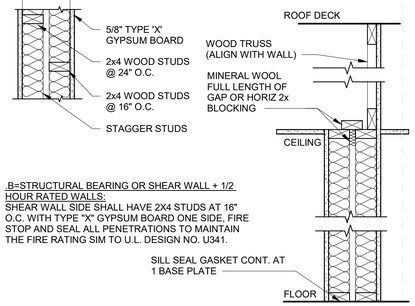

.B=STRUCTURAL BEARING OR SHEAR WALL + 1/2 HOUR RATED WALLS:
SHEAR WALL SIDE SHALL HAVE 2X4 STUDS AT 16" O.C. WITH TYPE "X" GYPSUM BOARD ONE SIDE, FIRE STOP AND SEAL ALL PENETRATIONS TO MAINTAIN THE FIRE RATING SIM TO U.L. DESIGN NO. U341.

4.D WALL TYPE 4.D

1" = 1'-0"

INTERIOR INTERIOR



STC: 51 RATED DESIGN; NATIONAL GYPSUM DESIGN # NGC 2011071

NOTE:
* 5/8" TYPE "X" GLASS MAT WATER RESISTANT GYPSUM BOARD @ SHOWER/TUB SURROUNDS, LAUNDRY ROOM APPLIANCE WALL, LAUNDRY SINK SUPPLY SIDE WALL AND ADJACENT WALL TO LAUNDRY SINK.

6.S WALL TYPE 6.S

1" = 1'-0"

INTERIOR INTERIOR

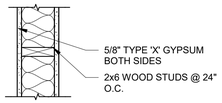

NOTE:
* 5/8" TYPE "X" GLASS MAT WATER RESISTANT GYPSUM BOARD @ SHOWER/TUB SURROUNDS, LAUNDRY ROOM APPLIANCE WALL, LAUNDRY SINK SUPPLY SIDE WALL AND ADJACENT WALL TO LAUNDRY SINK.

6.1 WALL TYPE 6.1

1" = 1'-0"

INTERIOR INTERIOR

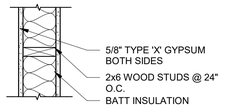

NOTE:
* 5/8" TYPE "X" GLASS MAT WATER RESISTANT GYPSUM BOARD @ SHOWER/TUB SURROUNDS, LAUNDRY ROOM APPLIANCE WALL, LAUNDRY SINK SUPPLY SIDE WALL AND ADJACENT WALL TO LAUNDRY SINK.

6.F WALL TYPE 6.F

1" = 1'-0"

WALL TYPE CONVENTION

4.F

STUD SIZE — WALL HEIGHT AND RATING

4 - 2X4 WOOD STUD
6 - 2X6 WOOD STUD
(ALL SIZES ARE NOMINAL)

.1 - 1/2 HOUR RATED WALL TO STRUCTURE
.P - NON RATED WALL TO 6" ABOVE HIGHEST ADJACENT CEILING
.F - NON RATED WALL TO STRUCTURE
.S - SOUND WALL TO STRUCTURE
.D - DEMISING WALL

TYPICAL WALL ASSEMBLY NOTES:

1. REFER TO BUILDING ELEVATIONS FOR INFORMATION ON LOCATIONS OF ALL CONTROL JOINTS
2. CONSULT ARCHITECT IF WALL TYPE CLARIFICATION IS NEEDED PRIOR TO CONSTRUCTING THE WALL
3. PROVIDE FIRE STOPPING AT ALL PENETRATIONS IN ALL FIRE RATED WALLS AND CEILINGS.
4. CONTRACTOR TO PROVIDE STRAPPING UNDER GYPSUM BOARD TO SUPPORT OWNER FURNISHED EQUIPMENT, TOILET ACCESSORIES, CABINETRY, WALL HUNG SYSTEMS FURNITURE, WALL STOPS.
5. PROVIDE MOISTURE RESISTANT GYPSUM BOARD (NON-PAPER) IN ALL TOILETS AND JANITOR CLOSETS AND BACKER BOARD UNDER CERAMIC TILE WHERE OCCURS
6. REFER TO INTERIOR ELEVATIONS FOR INFORMATION ON WALL FINISHES
7. ALL WALLS WITH SOUND ATTENUATION BLANKETS ARE DESIGNED FOR AN STC RATING OF 40.SOUND ATTENUATION BLANKETS ARE A MINIMUM OF 3 1/2" U.N.O.
8. PROVIDE ACOUSTIC SEAL AT PERIMETER AND PENETRATION OF ALL SOUND RATED PARTITIONS AND OTHER CONSTRUCTION AS REQUIRED.
9. PROVIDE TYPE " X" GYPSUM BOARD AT ALL LOCATIONS AND THROUGHOUT.

JSRa
JOHNSON SMITTHIPONG & ROSAMOND ASSOCIATES, INC.
5210 E Williams Cir • Ste 600 • Tucson, AZ 85711
(520) 547-7904 • www.jsra.com

Consultants:

ISSUED FOR INTERIM REVIEW

THIS DOCUMENT IS NOT TO BE USED FOR REGULATORY APPROVAL, PERMIT, OR CONSTRUCTION

Vernon Rosamond
Arizona Lic #: 9793
Date: 8/13/24

iHOUSE APARTMENT

Tonalea, AZ 86044

U. S. DEPARTMENT OF HEALTH AND HUMAN SERVICES
INDIAN HEALTH SERVICE
NAVAJO AREA OFFICE

No.	Date	Description

Issue Date:	8/13/24
Project No:	23-390
Scale:	As indicated
Drawn By:	BARBOZA
Checked By:	HARGREAVES

PHASE IV (Final CD)

Sheet Title:

OVERALL FLOOR PLAN & WALL TYPES

Sheet Number:

A121

Autodesk Docs://23-390 IHS iHouse Apt v2023/23-390 06 Arch iHouse Apt 2023.rvt
8/13/2024 2:30:23 PM



C1 FLOOR PLAN - WEST SIDE

1/8" = 1'-0"

A2 FLOOR PLAN - EAST SIDE

1/8" = 1'-0"

GENERAL NOTES

A	REFER TO CIVIL DRAWINGS FOR FIINSH FLOOR ELEVATIONS OF EACH UNIT.
B	PROVIDE SOLID 2X BLOCKING IN WALLS FOR ALL WALL MOUNTED FIXTURE/EQUIPMENT (i.e. TOWEL BARS, CURTAIN/SHOWER RODS, DOOR STOPS, CABINETS, ETC.)
C	ALL DIMENSIONS ARE TO FACE OF STUD OR CENTERLINE OF OPENINGS, U.N.O.
D	ALL ANGLED WALLS ARE AT 45 DEGREES, U.N.O.
E	PROVIDE FIRE BLOCKING IN ALL STUD WALLS AT OPENINGS AROUND VENTS, PIPES, DUCTS, CHIMNEYS, AND SIMILAR OPENINGS.
F	REFER TO EFLECTED CEILING PLAN FOR FURR. DOWNS
G	HIGH IMPACT CORNER GUARD (I.B.C. 158 OR EQUAL) INSTALL DIRECTLY ABOVE BASE. INSTALL AT ALL PROJECTING CORNERS IN CORRIDORS
H	COORDINATE FLOOR DRAIN LOCATIONS IN ALL MECHANICAL ROOMS. SEE MECHANICAL DRAWINGS
J	REFER TO FURNITURE PLAN.

KEYNOTES

Key #	Keynote Text
05 52	METAL PATIO RAILING
07 72	PREFINISHED 4" DOWNSPOUT.
10 26	CORNER GUARD.
12 48	RECESSED WALK-OFF MAT.
23 61	CONDENSING UNIT.

JSRa
JOHNSON SMITTHIPONG & ROSAMOND ASSOCIATES, INC.
5210 E Williams Cir • Ste 600 • Tucson, AZ 85711
(520) 547-7904 • www.jsra.com

Consultants:

ISSUED FOR INTERIM REVIEW

THIS DOCUMENT IS NOT TO BE USED FOR REGULATORY APPROVAL, PERMIT, OR CONSTRUCTION

Vernon Rosamond
Arizona Lic #: 9793
Date: 8/13/24

iHOUSE APARTMENT

Tonalea, AZ 86044

U. S. DEPARTMENT OF HEALTH AND HUMAN SERVICES
INDIAN HEALTH SERVICE
NAVAJO AREA OFFICE

No.	Date	Description

Issue Date:	8/13/24
Project No:	23-390
Scale:	1/8" = 1'-0"
Drawn By:	KADDOURA
Checked By:	HARGREAVES

PHASE IV (Final CD)

Sheet Title:

FLOOR PLAN

Sheet Number:

A122

Autodesk Docs://23-390 IHS iHouse Apt v2023/23-390 06 Arch iHouse Apt 2023.rvt
8/13/2024 2:30:25 PM

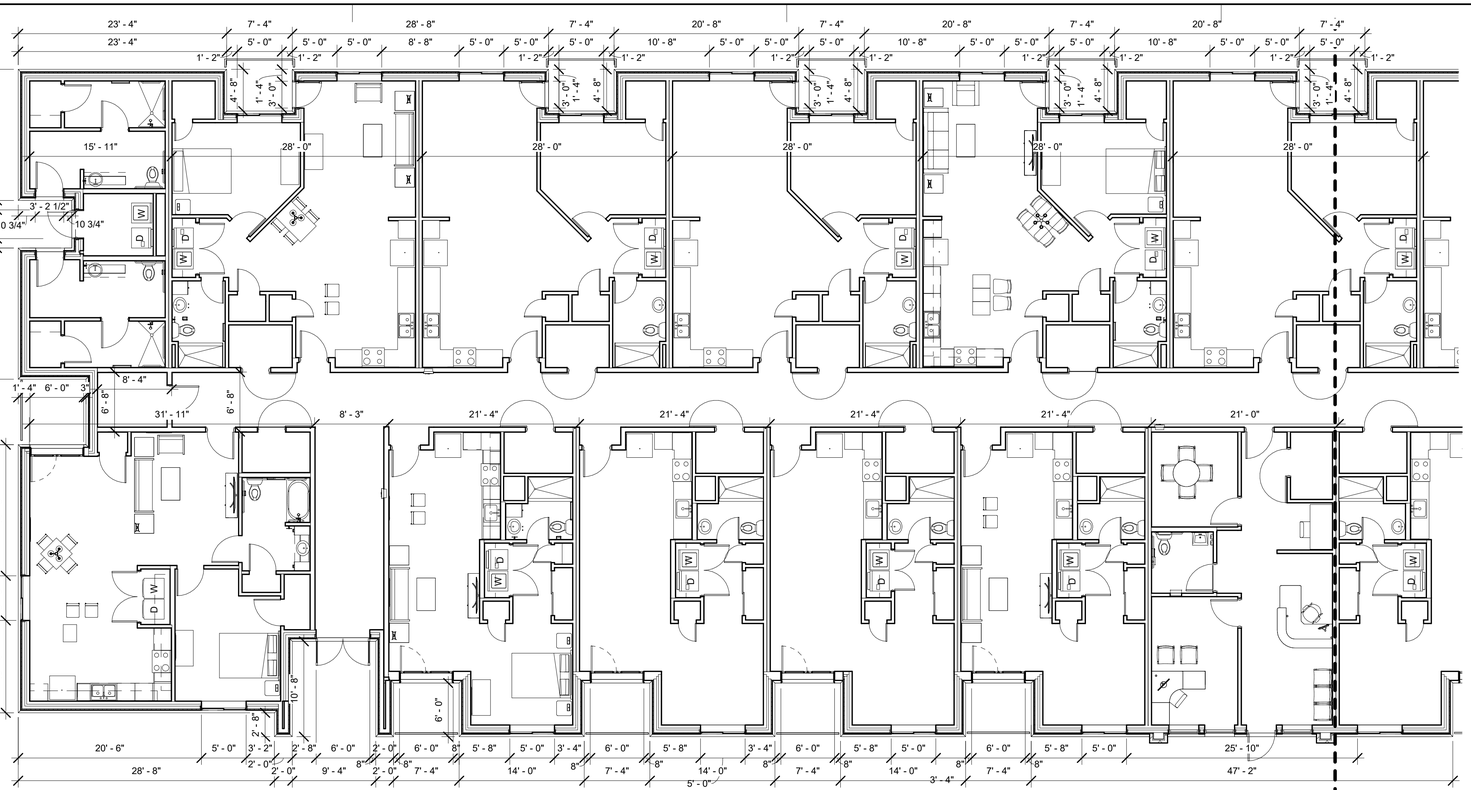

C1 DIMENSION PLAN - WEST SIDE
1/8" = 1'-0"

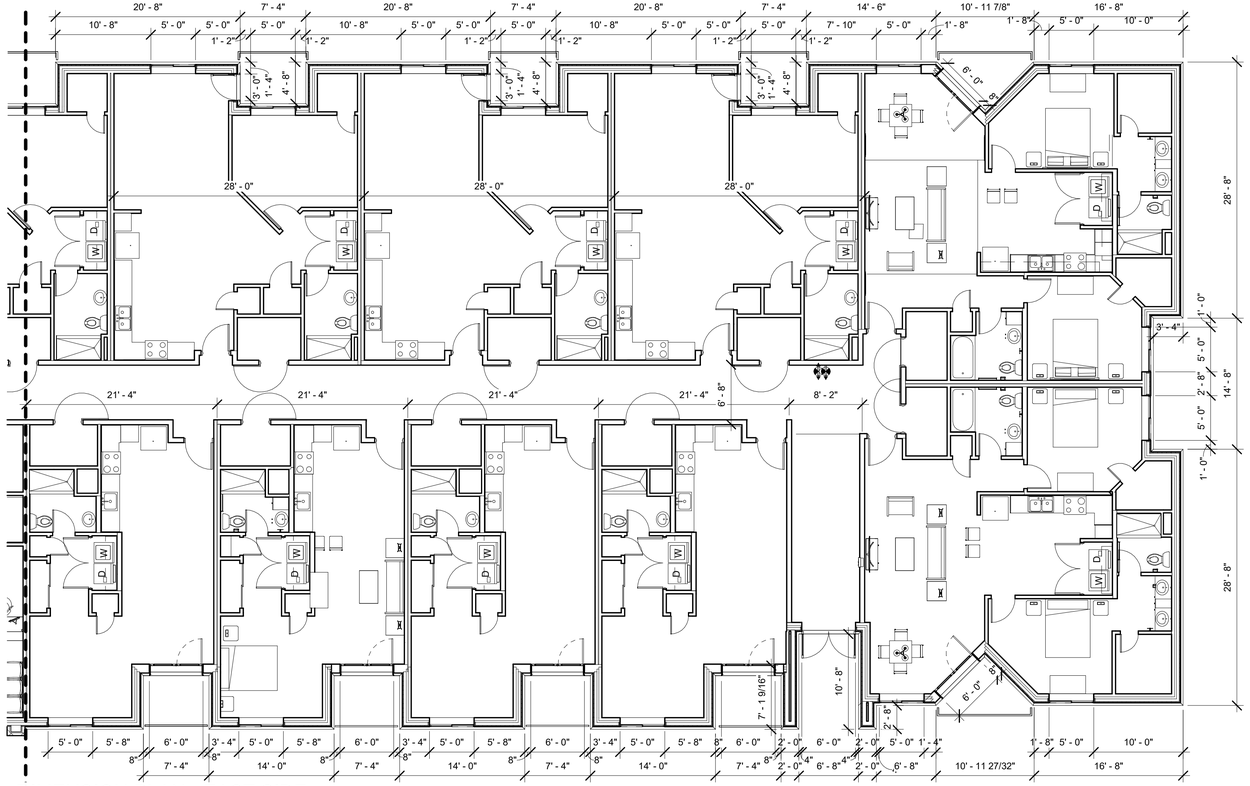

A2 DIMENSION PLAN - EAST SIDE
1/8" = 1'-0"

JSRa
JOHNSON SMITTHIPONG & ROSAMOND ASSOCIATES, INC.
5210 E Williams Cir • Ste 600 • Tucson, AZ 85711
(520) 547-7904 • www.jsra.com

Consultants:

ISSUED FOR INTERIM REVIEW

THIS DOCUMENT IS NOT TO BE USED FOR REGULATORY APPROVAL, PERMIT, OR CONSTRUCTION

Vernon Rosamond
Arizona Lic #: 9793
Date: 8/13/24

iHOUSE APARTMENT

Tonalea, AZ 86044

U. S. DEPARTMENT OF HEALTH AND HUMAN SERVICES
INDIAN HEALTH SERVICE
NAVAJO AREA OFFICE

No.	Date	Description

Issue Date:	8/13/24
Project No:	23-390
Scale:	1/8" = 1'-0"
Drawn By:	KADDOURA
Checked By:	HARGREAVES

PHASE IV (Final CD)

Sheet Title:

DIMENSION PLAN

Sheet Number:

A131

Autodesk Docs://23-390 IHS iHouse Apt v2023/23-390 06 Arch iHouse Apt 2023.rvt
8/13/2024 2:30:27 PM

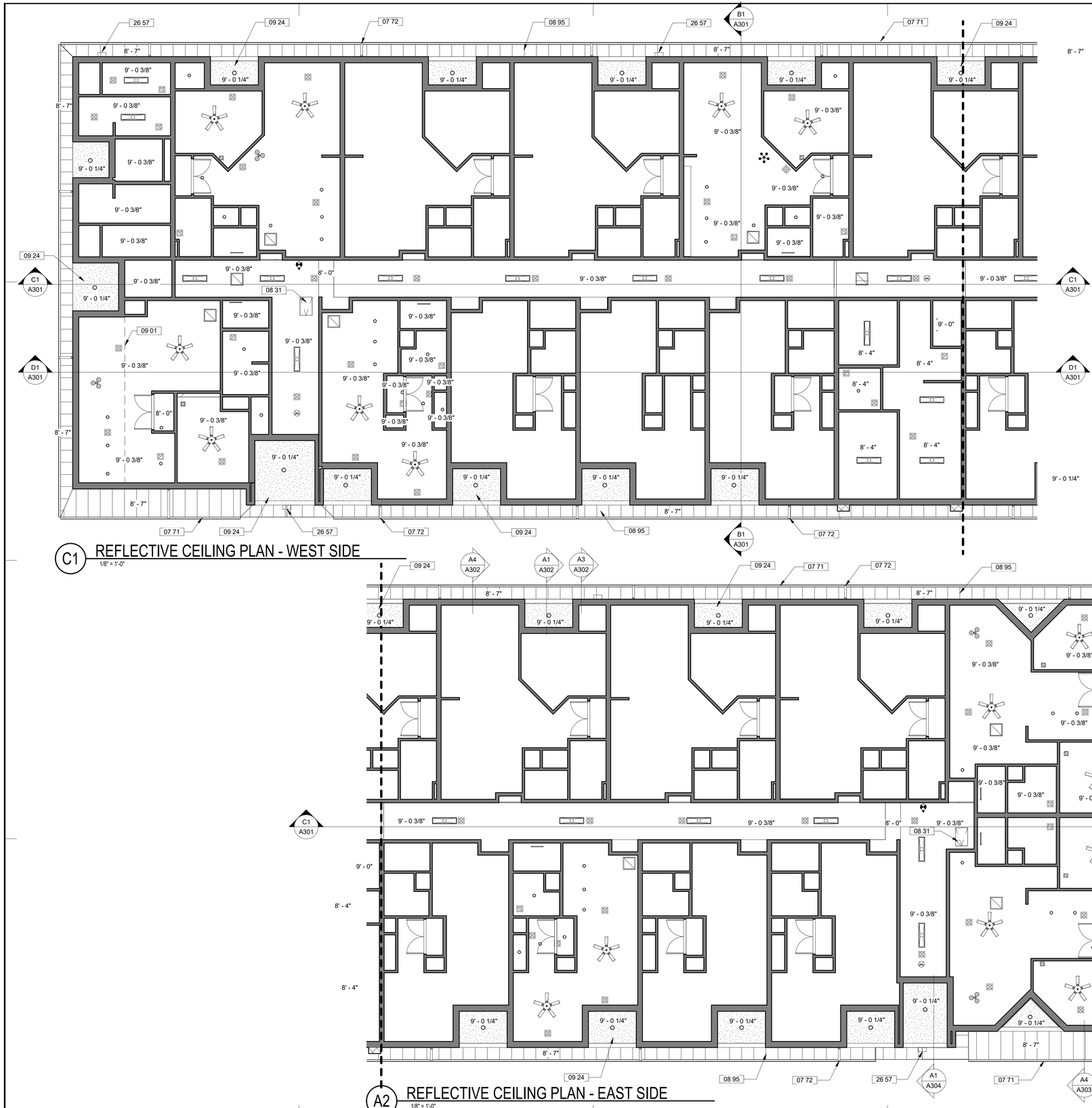

C1 REFLECTIVE CEILING PLAN - WEST SIDE
1/8" = 1'-0"

A2 REFLECTIVE CEILING PLAN - EAST SIDE
1/8" = 1'-0"

KEYNOTES

Key #	Keynote Text
07 71	METAL GUTTERS.
07 72	PREFINISHED 4" DOWNSPOUT.
08 31	INTERIOR FLUSH GFRG ACCESS DOOR, PAINT TO MATCH CEILING.
08 95	METAL SOFFIT.
09 01	CONTROL JOINT.
09 24	GLASS MAT WITH STUCCO FINISH CEILING SOFFIT.
26 57	WALL PACK, REFERENCE ELECTRICAL.

RCP Legend
1/4" = 1'-0"

- CEILING FAN
- RECESSED CAN LIGHT
- 1x4 FLUORESCENT LIGHTS (SURFACE)
- 24" STRIP LIGHT (SURFACE)
- EXTERIOR ROUND MOUNTED LIGHT (SURFACE)
- EXHAUST FAN
- SUPPLY GRILLE
- RETURN GRILLE
- EXIT, SEE ELECTRICAL
- CEILING ACCESS PANEL

JSRa
JOHNSON SMITTHIPONG & ROSAMOND ASSOCIATES, INC.
5210 E Williams Cir • Ste 600 • Tucson, AZ 85711
(520) 547-7904 • www.jsra.com

Consultants:

ISSUED FOR INTERIM REVIEW
THIS DOCUMENT IS NOT TO BE USED FOR REGULATORY APPROVAL, PERMIT, OR CONSTRUCTION
Vernon Rosamond
Arizona Lic #: 9793
Date: 8/13/24

iHOUSE APARTMENT

Tonalea, AZ 86044

U. S. DEPARTMENT OF HEALTH AND HUMAN SERVICES
INDIAN HEALTH SERVICE
NAVAJO AREA OFFICE

No.	Date	Description

Issue Date:	8/13/24
Project No:	23-390
Scale:	As indicated
Drawn By:	RODRIGUEZ
Checked By:	HARGREAVES

PHASE IV (Final CD)

Sheet Title:

REFLECTIVE CEILING PLAN

Sheet Number:

A141

Autodesk Docs://23-390 IHS iHouse Apt v2023/23-390 06 Arch iHouse Apt 2023.rvt
8/13/2024 2:30:29 PM

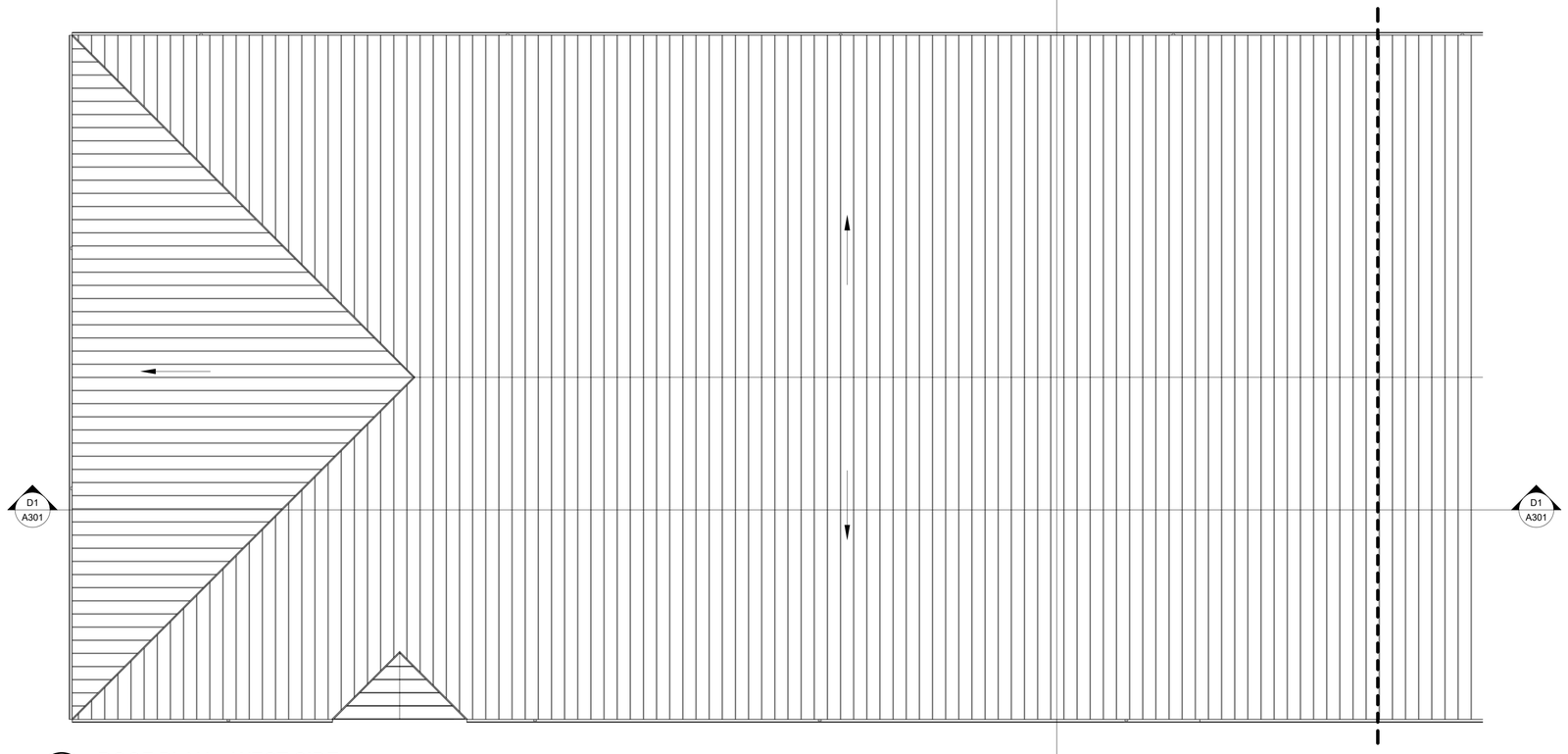

C1 ROOF PLAN - WEST SIDE
1/8" = 1'-0"

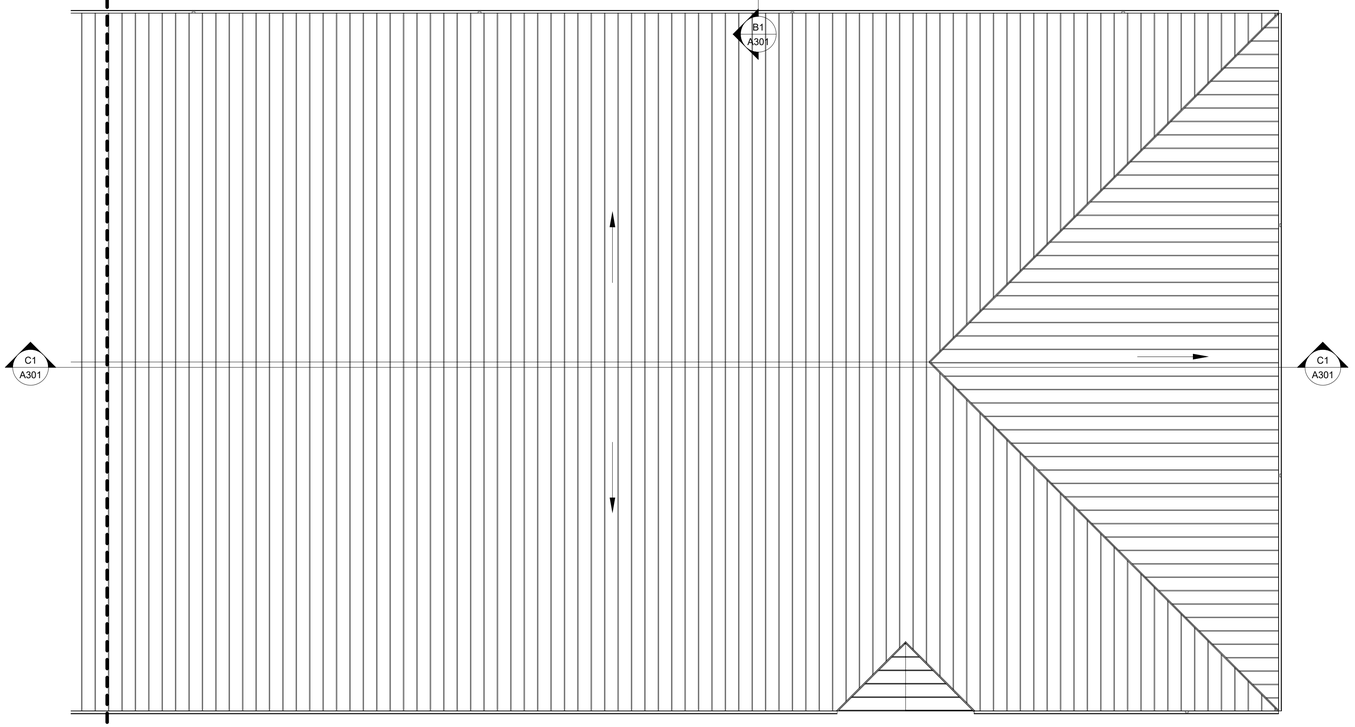

A2 ROOF PLAN - EAST SIDE
1/8" = 1'-0"

JSRa
JOHNSON SMITTHIPONG & ROSAMOND ASSOCIATES, INC.
5210 E Williams Cir • Ste 600 • Tucson, AZ 85711
(520) 547-7904 • www.jsra.com

Consultants:

ISSUED FOR INTERIM REVIEW
THIS DOCUMENT IS NOT TO BE USED FOR REGULATORY APPROVAL, PERMIT, OR CONSTRUCTION
Vernon Rosamond
Arizona Lic #: 9793
Date: 8/13/24

iHOUSE APARTMENT

Tonalea, AZ 86044

U. S. DEPARTMENT OF HEALTH AND HUMAN SERVICES
INDIAN HEALTH SERVICE
NAVAJO AREA OFFICE

No.	Date	Description

Issue Date:	8/13/24
Project No:	23-390
Scale:	1/8" = 1'-0"
Drawn By:	KADDOURA
Checked By:	HARGREAVES

PHASE IV (Final CD)

Sheet Title:

ROOF PLAN

Sheet Number:

A151

Autodesk Docs://23-390 IHS IHouse Apt v2023/23-390 06 Arch IHouse Apt 2023.rvt
8/13/2024 2:30:29 PM

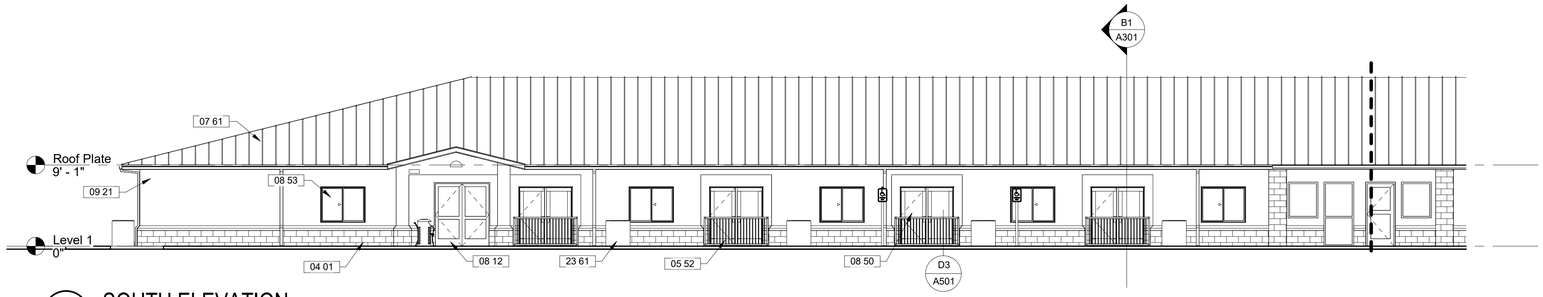

E1 SOUTH ELEVATION

1/8" = 1'-0"



D1 SOUTH ELEVATION

1/8" = 1'-0"

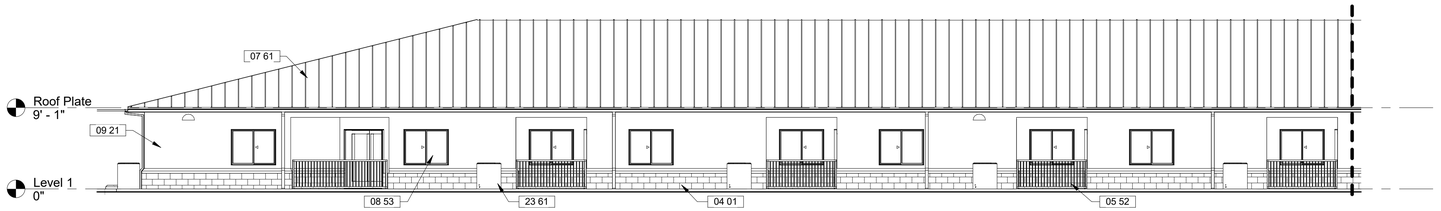

C1 NORTH ELEVATION

1/8" = 1'-0"

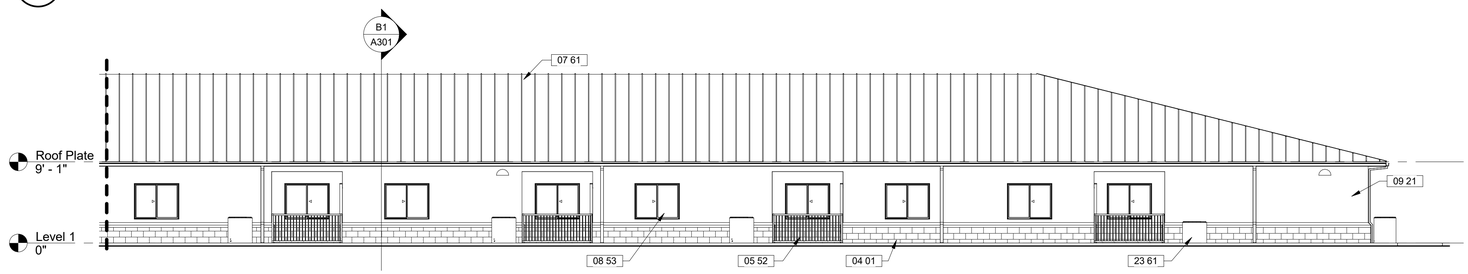

B1 NORTH ELEVATION

1/8" = 1'-0"

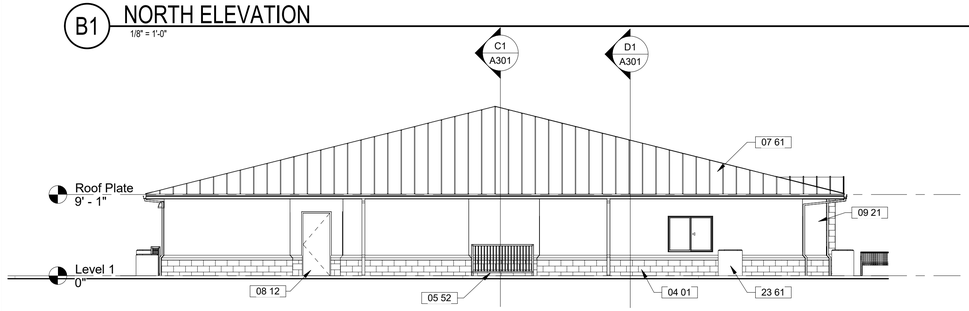

A1 WEST ELEVATION

1/8" = 1'-0"

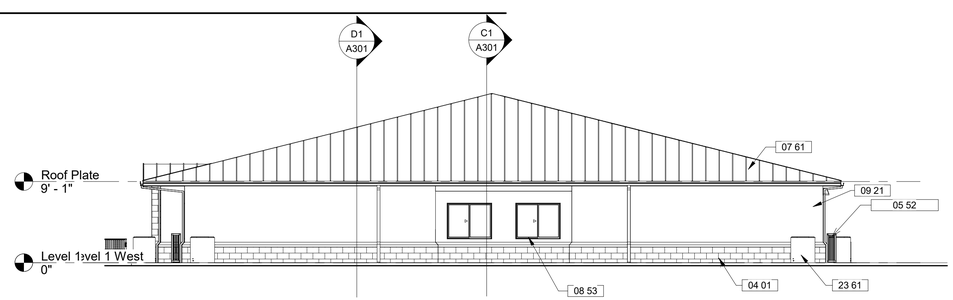

A3 EAST ELEVATION

1/8" = 1'-0"

KEYNOTES	
Key #	Keynote Text
04 01	ANCHORED MASONRY VENEER.
05 52	METAL PATIO RAILING
07 61	STANDING SEAM METAL ROOF.
08 12	DOOR, REFERENCE DOOR SCHEDULE.
08 50	FIBERGLASS PATIO DOOR.
08 53	SLIDING WINDOW.
09 21	ONE-COAT STUCCO.
23 61	CONDENSING UNIT.

JSRa
JOHNSON SMITTHIPONG & ROSAMOND ASSOCIATES, INC.
5210 E Williams Cir • Ste 600 • Tucson, AZ 85711
(520) 547-7904 • www.jsra.com

Consultants:

ISSUED FOR INTERIM REVIEW

THIS DOCUMENT IS NOT TO BE USED FOR REGULATORY APPROVAL, PERMIT, OR CONSTRUCTION

Vernon Rosamond
Arizona Lic #: 9793
Date: 8/13/24

iHOUSE APARTMENT

Tonalea, AZ 86044

U. S. DEPARTMENT OF HEALTH AND HUMAN SERVICES
INDIAN HEALTH SERVICE
NAVAJO AREA OFFICE

No.	Date	Description

Issue Date:	8/13/24
Project No:	23-390
Scale:	1/8" = 1'-0"
Drawn By:	KADDOURA
Checked By:	HARGREAVES

PHASE IV (Final CD)

Sheet Title:

ELEVATIONS

Sheet Number:

A201

Autodesk Docs://23-390 IHS iHouse Apt v2023/23-390 06 Arch iHouse Apt 2023.rvt
8/13/2024 2:30:32 PM

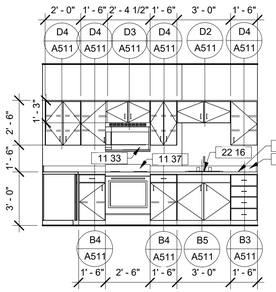

D1 EFFICIENCY - KITCHEN W
1/4" = 1'-0"

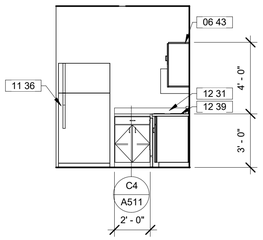

D2 EFFICIENCY - KITCHEN N
1/4" = 1'-0"

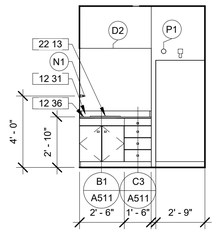

D3 EFFICIENCY - BR E
1/4" = 1'-0"

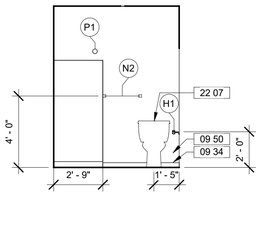

D4 EFFICIENCY - BR W
1/4" = 1'-0"

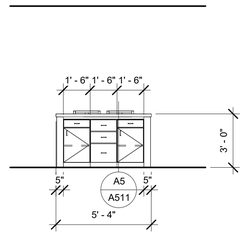

D5 KITCHEN ISLAND
1/4" = 1'-0"

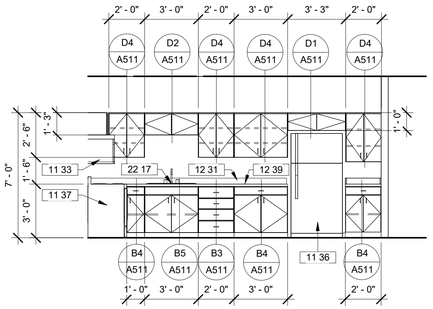

C1 1 BEDROOM - KITCHEN E
1/4" = 1'-0"

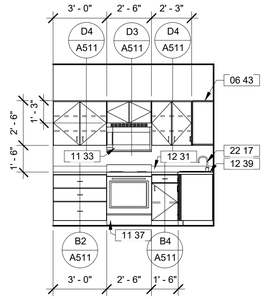

C2 1 BEDROOM - KITCHEN S
1/4" = 1'-0"

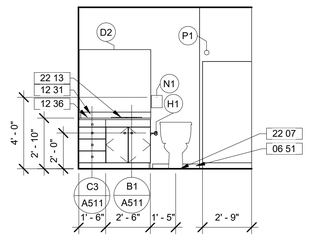

C3 1 BEDROOM - BR W
1/4" = 1'-0"

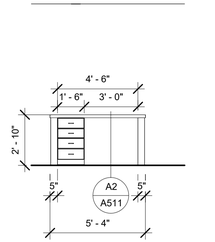

C4 ACCESSIBLE KITCHEN ISLAND
1/4" = 1'-0"

KEYNOTES	
Key #	Keynote Text
06 43	OVERHEAD CABINETS.
06 51	WOOD BASE.
09 34	ALUMINUM BASE (AB), REFERENCE MATERIAL SCHEDULE.
09 50	CT1, REFERENCE MATERIAL SCHEDULE.
10 37	ACCESSIBLE SHOWER HEAD W/ ADJUSTABLE BAR.
11 33	MICROWAVE WITH RANGE VENT.
11 34	UNDERCOUNTER MICROWAVE.
11 36	REFRIGERATOR.
11 37	RANGE.
12 31	4" SOLID SURFACE BACKSPLASH.
12 36	VANITY W/ COUNTERTOP.
12 39	SOLID SURFACE COUNTERTOP.
22 07	WATER CLOSET, REFERENCE PLUMBING.
22 13	LAVATORY, REFERENCE PLUMBING.
22 16	SINGLE SINK, REFERENCE PLUMBING.
22 17	DOUBLE SINK, REFERENCE PLUMBING.
22 42	SINK SKIRT

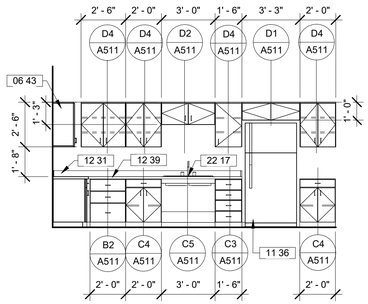

B1 ACCESSIBLE - KITCHEN S
1/4" = 1'-0"

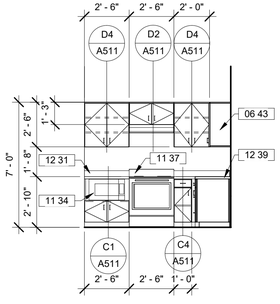

B2 ACCESSIBLE - KITCHEN W
1/4" = 1'-0"

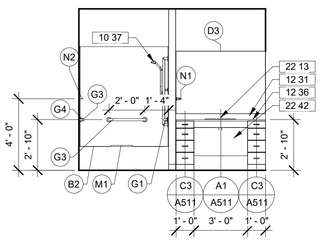

B3 ACCESSIBLE - BR W
1/4" = 1'-0"

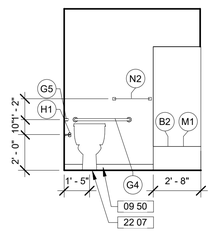

B4 ACCESSIBLE - BR N
1/4" = 1'-0"

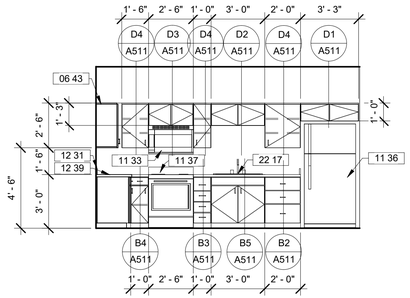

A1 2 BEDROOM - KITCHEN S
1/4" = 1'-0"

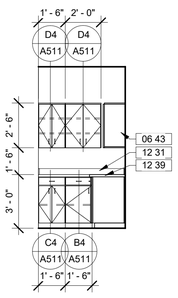

A2 2 BEDROOM - KITCHEN E
1/4" = 1'-0"

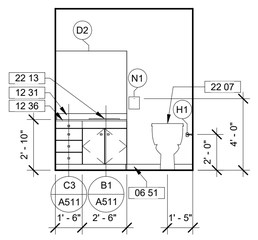

A3 2 BEDROOM - BR W
1/4" = 1'-0"

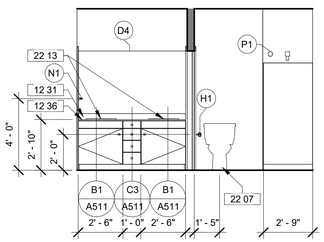

A4 2 BEDROOM - BR2 W
1/4" = 1'-0"

RESTROOM ACCESSORIES		
KEY	ITEM	REMARKS
	<varies>	
D1	FRAMED MIRROR 24" X 36"	40" MAX FROM FIN FLOOR TO REFLECTIVE SURFACE OF MIRROR
D2	FRAMELESS MIRROR 42" X 48"	
D3	FRAMELESS MIRROR 42" X 60"	40" MAX FROM FIN FLOOR TO REFLECTIVE SURFACE OF MIRROR
D4	FRAMELESS MIRROR 42" X 72"	
E1	TOILET SEAT COVER	
F1	RECESSED PAPER/WASTE RECEPTACLE COMBO	10" AFF TO BOTTOM OF RECEPTACLE, CENTER UNDER TOWEL DISPENSER
G1	12" GRAB BAR	
G2	18" GRAB BAR	
G3	24" GRAB BAR	34" AFF TO CENTER OF GRAB BAR
G4	36" GRAB BAR	34" AFF TO CENTER OF GRAB BAR
G5	42" GRAB BAR	34" AFF TO CENTER OF GRAB BAR
H1	TOILET TISSUE HOLDER	
H2	TOILET TISSUE DISPENSER	ROLL FREE SPINNING
J1	SANITARY NAPKIN DISPOSAL	TOP @ 4" BELOW GRAB BAR & 3" FROM TOILET PAPER DISP
K1	SOAP DISPENSER	44" FROM FIN FLOOR TO OPERATING MECHANISM
K2	HAND SANITIZER DISPENSER	
L1	DOUBLE ROBE HOOK	48" AFF TO TOP HOOK
M1	REMOVABLE BATHTUB SEAT	18" AFF TO TOP OF SEAT
N1	TOWEL RING	
N2	24" TOWEL BAR	
P1	SHOWER CURTAIN ROD	

JSRa
JOHNSON SMITTHIPONG & ROSAMOND ASSOCIATES, INC.
5210 E Williams Cir • Ste 600 • Tucson, AZ 85711
(520) 547-7904 • www.jsra.com

Consultants:

ISSUED FOR INTERIM REVIEW
THIS DOCUMENT IS NOT TO BE USED FOR REGULATORY APPROVAL, PERMIT, OR CONSTRUCTION
Vernon Rosamond
Arizona Lic #: 9793
Date: 8/13/24

iHOUSE APARTMENT

Tonalea, AZ 86044

U. S. DEPARTMENT OF HEALTH AND HUMAN SERVICES
INDIAN HEALTH SERVICE
NAVAJO AREA OFFICE

No.	Date	Description

Issue Date:	8/13/24
Project No:	23-390
Scale:	1/4" = 1'-0"
Drawn By:	BARBOZA
Checked By:	HARGREAVES

PHASE IV (Final CD)

Sheet Title:

INTERIOR ELEVATIONS

Sheet Number:

A211

Autodesk Docs://23-390 IHS iHouse Apt v2023/23-390 06 Arch iHouse Apt 2023.rvt
8/13/2024 2:30:34 PM

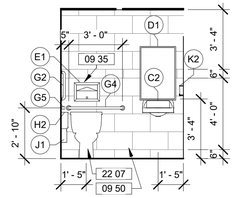

D1 134 RR N
1/4" = 1'-0"

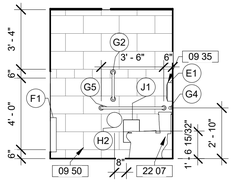

D2 134 RR E
1/4" = 1'-0"

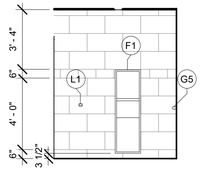

D3 134 RR S
1/4" = 1'-0"

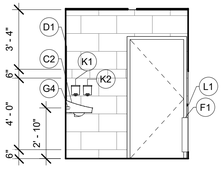

D4 134 RR W
1/4" = 1'-0"

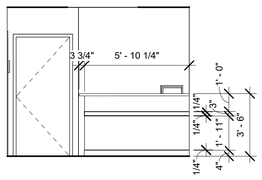

C1 Office N
1/4" = 1'-0"

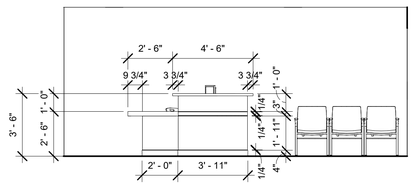

C2 Office E
1/4" = 1'-0"

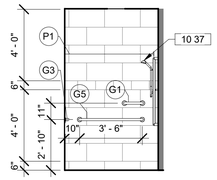

C3 123.1 RV SHOWER
1/4" = 1'-0"

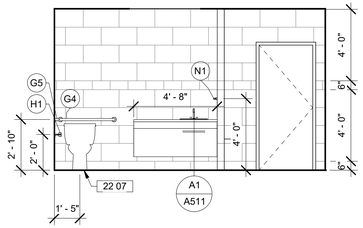

C4 123 RV RESTROOM
1/4" = 1'-0"

KEYNOTES

Key #	Keynote Text
09 35	ALUMINUM EDGE STRIP (ES1), REFERENCE MATERIAL SCHEDULE.
09 50	CT1, REFERENCE MATERIAL SCHEDULE.
10 37	ACCESSIBLE SHOWER HEAD W/ ADJUSTABLE BAR.
22 07	WATER CLOSET, REFERENCE PLUMBING.

RESTROOM ACCESSORIES

KEY	ITEM	REMARKS
	<varies>	
D1	FRAMED MIRROR 24" X 36"	40" MAX FROM FIN FLOOR TO REFLECTIVE SURFACE OF MIRROR
D2	FRAMELESS MIRROR 42" X 48"	
D3	FRAMELESS MIRROR 42" X 60"	40" MAX FROM FIN FLOOR TO REFLECTIVE SURFACE OF MIRROR
D4	FRAMELESS MIRROR 42" X 72"	
E1	TOILET SEAT COVER	
F1	RECESSED PAPER/WASTE RECEPTACLE COMBO	10" AFF TO BOTTOM OF RECEPTACLE, CENTER UNDER TOWEL DISPENSER
G1	12" GRAB BAR	
G2	18" GRAB BAR	
G3	24" GRAB BAR	34" AFF TO CENTER OF GRAB BAR
G4	36" GRAB BAR	34" AFF TO CENTER OF GRAB BAR
G5	42" GRAB BAR	34" AFF TO CENTER OF GRAB BAR
H1	TOILET TISSUE HOLDER	
H2	TOILET TISSUE DISPENSER	ROLL FREE SPINNING
J1	SANITARY NAPKIN DISPOSAL	TOP @ 4" BELOW GRAB BAR & 3" FROM TOILET PAPER DISP
K1	SOAP DISPENSER	44" FROM FIN FLOOR TO OPERATING MECHANISM
K2	HAND SANITIZER DISPENSER	
L1	DOUBLE ROBE HOOK	48" AFF TO TOP HOOK
M1	REMOVABLE BATHTUB SEAT	18" AFF TO TOP OF SEAT
N1	TOWEL RING	
N2	24" TOWEL BAR	
P1	SHOWER CURTAIN ROD	

JSRa
JOHNSON SMITTHIPONG & ROSAMOND ASSOCIATES, INC.
5210 E Williams Cir • Ste 600 • Tucson, AZ 85711
(520) 547-7904 • www.jsra.com

Consultants:

ISSUED FOR INTERIM REVIEW
THIS DOCUMENT IS NOT TO BE USED FOR REGULATORY APPROVAL, PERMIT, OR CONSTRUCTION
Vernon Rosamond
Arizona Lic #: 9793
Date: 8/13/24

iHOUSE APARTMENT

Tonalea, AZ 86044

U. S. DEPARTMENT OF HEALTH AND HUMAN SERVICES
INDIAN HEALTH SERVICE
NAVAJO AREA OFFICE

No.	Date	Description

Issue Date:	8/13/24
Project No:	23-390
Scale:	1/4" = 1'-0"
Drawn By:	BARBOZA
Checked By:	HARGREAVES

PHASE IV (Final CD)

Sheet Title:

INTERIOR ELEVATIONS

Sheet Number:

A212

Autodesk Docs://23-390 IHS IHouse Apt v2023/23-390 06 Arch IHouse Apt 2023.rvt
8/13/2024 2:30:35 PM

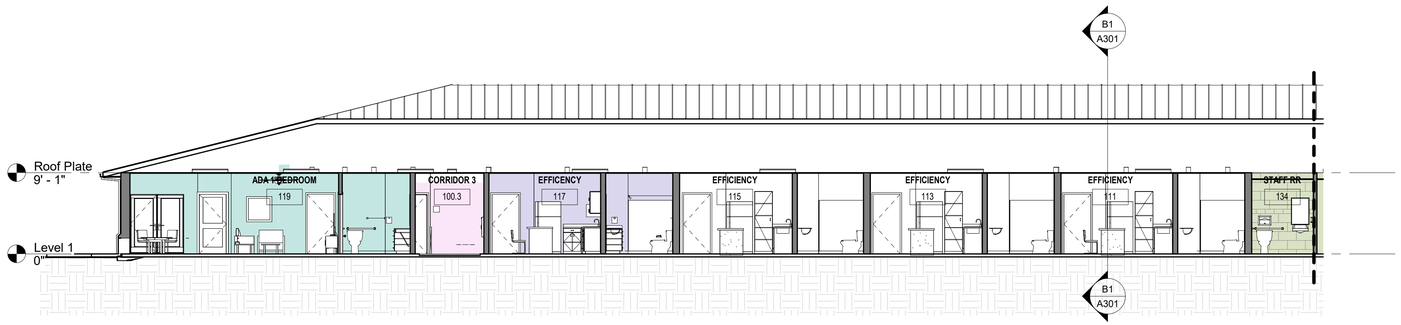

D1 LONGITUDINAL SECTION QUARTERS

1/8" = 1'-0"

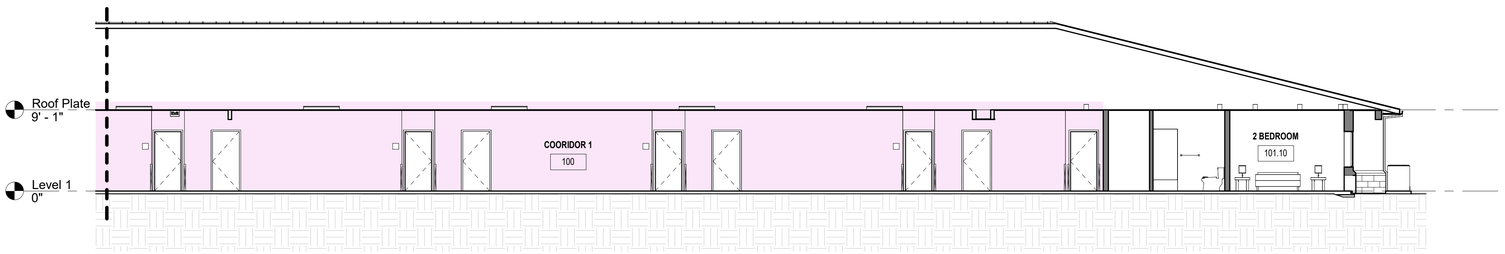

C1 LONGITUDINAL SECTION COORIDOR

1/8" = 1'-0"

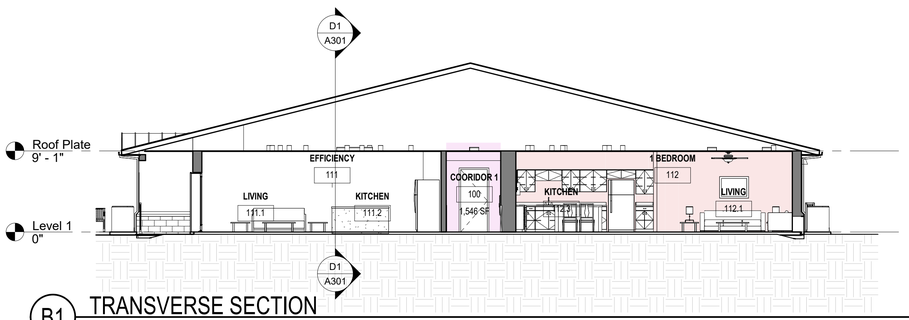

B1 TRANSVERSE SECTION

1/8" = 1'-0"

JSRa
JOHNSON SMITTHIPONG & ROSAMOND ASSOCIATES, INC.
5210 E Williams Cir • Ste 600 • Tucson, AZ 85711
(520) 547-7904 • www.jsra.com

Consultants:

ISSUED FOR INTERIM REVIEW

THIS DOCUMENT IS NOT TO BE USED FOR REGULATORY APPROVAL, PERMIT, OR CONSTRUCTION

Vernon Rosamond
Arizona Lic #: 9793
Date: 8/13/24

iHOUSE APARTMENT

Tonalea, AZ 86044

U. S. DEPARTMENT OF HEALTH AND HUMAN SERVICES
INDIAN HEALTH SERVICE
NAVAJO AREA OFFICE

No.	Date	Description

Issue Date:	8/13/24
Project No:	23-390
Scale:	1/8" = 1'-0"
Drawn By:	KADDOURA
Checked By:	HARGREAVES

PHASE IV (Final CD)

Sheet Title:

BUILDING SECTIONS

Sheet Number:

A301

Autodesk Docs://23-390 IHS IHouse Apt v2023/23-390 06 Arch IHouse Apt 2023.rvt
8/13/2024 2:30:37 PM

KEYNOTES

Key #	Keynote Text
04 01	ANCHORED MASONRY VENEER.
05 52	METAL PATIO RAILING
06 11	2x4 WOOD STUDS AT 16" O.C.
06 15	2x PRESSURE TREATED WOOD BASE PLATE.
06 17	WOOD TRUSS, REFERENCE STRUCTURAL.
06 18	GLUE-LAMINATED BEAM, REFERENCE STRUCTURAL.
06 25	1/2" PLYWOOD SHEATHING.
06 26	5/8" SHEATHING, REFERENCE STRUCTURAL.
06 46	2x6 WD FASCIA.
07 02	VAPOR RETARDER.
07 20	WEATHER BARRIER.
07 24	CLOSED CELL FOAMED-IN-PLACE INSULATION 4" MIN (R-24).
07 25	CLOSED CELL FOAMED-IN-PLACE INSULATION 9" MIN (R-60).
07 41	STANDING SEAM METAL ROOF.
07 71	METAL GUTTERS.
08 52	CASEMENT WINDOW.
08 95	METAL SOFFIT.
09 21	ONE-COAT STUCCO.
09 22	REINFORCED STUCCO CAP, INTEGRAL WITH WALL STUCCO.
09 24	GLASS MAT WITH STUCCO FINISH CEILING SOFFIT.
09 29	5/8" TYPE 'X' GYPSUM BOARD.
26 57	WALL PACK, REFERENCE ELECTRICAL.
26 58	SURFACE MOUNTED LIGHT, REFERENCE ELECTRICAL.

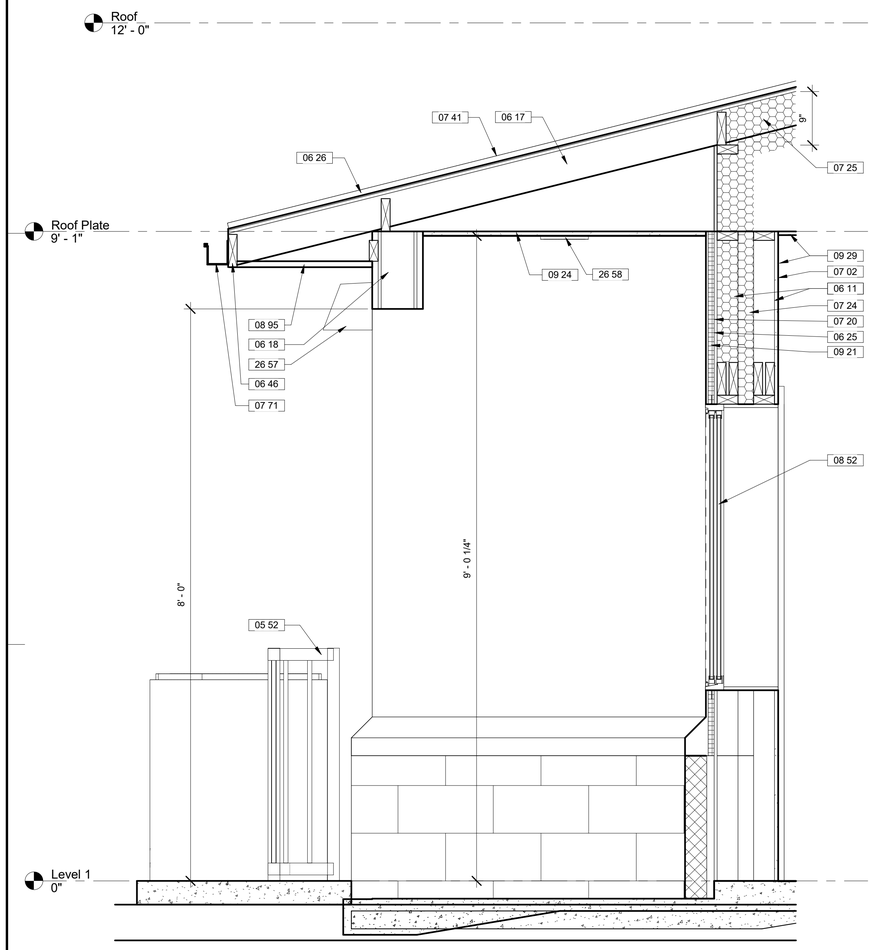

A1 PATIO @ EFFICIENCY
1" = 1'-0"

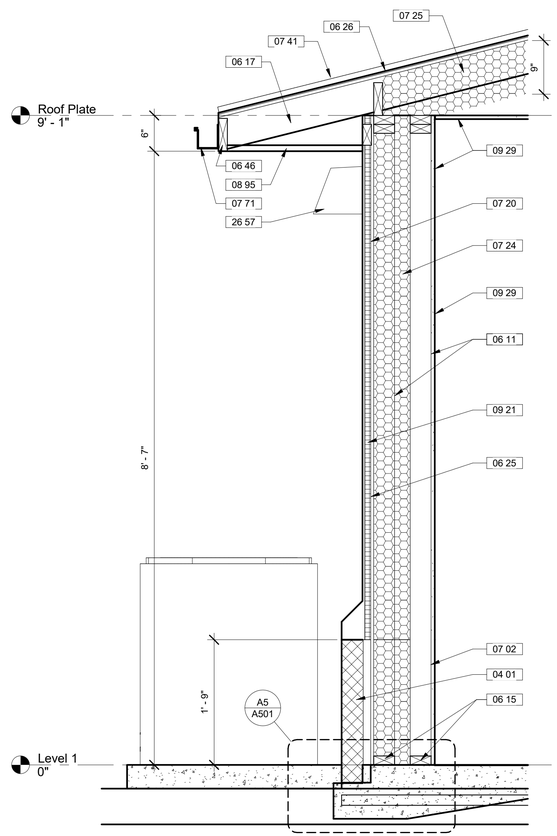

A3 TYP WALL
1" = 1'-0"

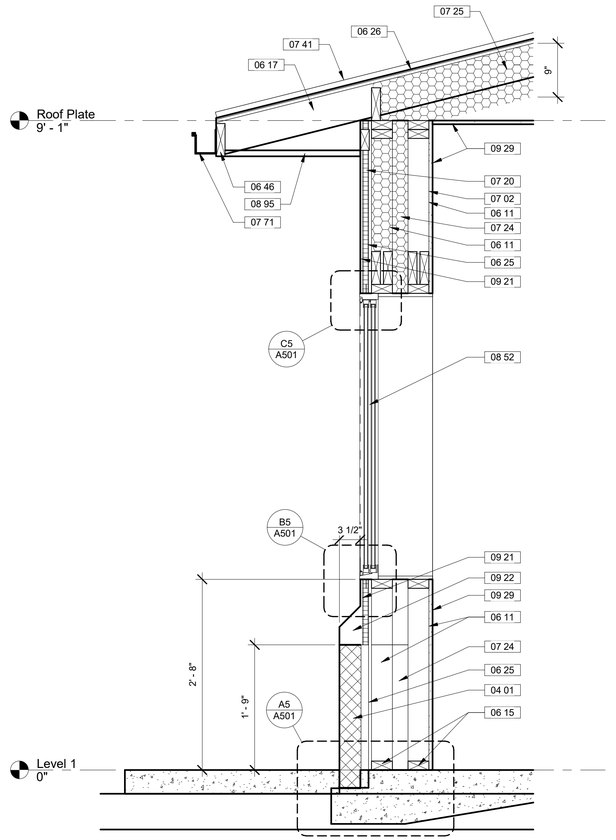

A4 TYP WALL @ WINDOW
1" = 1'-0"

JSRa
JOHNSON SMITTHIPONG & ROSAMOND ASSOCIATES, INC.
5210 E Williams Cir • Ste 600 • Tucson, AZ 85711
(520) 547-7904 • www.jsra.com

Consultants:

ISSUED FOR INTERIM REVIEW

THIS DOCUMENT IS NOT TO BE USED FOR REGULATORY APPROVAL, PERMIT, OR CONSTRUCTION

Vernon Rosamond
Arizona Lic #: 9793
Date: 8/13/24

iHOUSE APARTMENT

Tonalea, AZ 86044

U. S. DEPARTMENT OF HEALTH AND HUMAN SERVICES
INDIAN HEALTH SERVICE
NAVAJO AREA OFFICE

No.	Date	Description

Issue Date:	8/13/24
Project No:	23-390
Scale:	1" = 1'-0"
Drawn By:	BARBOZA
Checked By:	HARGREAVES

PHASE IV (Final CD)

Sheet Title:

WALL SECTIONS

Sheet Number:

A302

Autodesk Docs://23-390 IHS iHouse Apt v2023/23-390 06 Arch iHouse Apt 2023.rvt
8/13/2024 2:30:38 PM

KEYNOTES	
Key #	Keynote Text
03 31	POST TENSION CONCRETE SLAB - REFERENCE STRUCTURAL.
04 01	ANCHORED MASONRY VENEER.
06 11	2x4 WOOD STUDS AT 16" O.C.
06 15	2x PRESSURE TREATED WOOD BASE PLATE.
06 17	WOOD TRUSS, REFERENCE STRUCTURAL.
06 25	1/2" PLYWOOD SHEATHING.
06 26	5/8" SHEATHING, REFERENCE STRUCTURAL.
06 46	2x6 WD FASCIA.
07 02	VAPOR RETARDER.
07 20	WEATHER BARRIER.
07 24	CLOSED CELL FOAMED-IN-PLACE INSULATION 4" MIN (R-24).
07 25	CLOSED CELL FOAMED-IN-PLACE INSULATION 9" MIN (R-60).
07 41	STANDING SEAM METAL ROOF.
07 71	METAL GUTTERS.
07 72	PREFINISHED 4" DOWNSPOUT.
08 52	CASEMENT WINDOW.
08 95	METAL SOFFIT.
09 21	ONE-COAT STUCCO.
09 22	REINFORCED STUCCO CAP, INTEGRAL WITH WALL STUCCO.
09 29	5/8" TYPE 'X' GYPSUM BOARD.

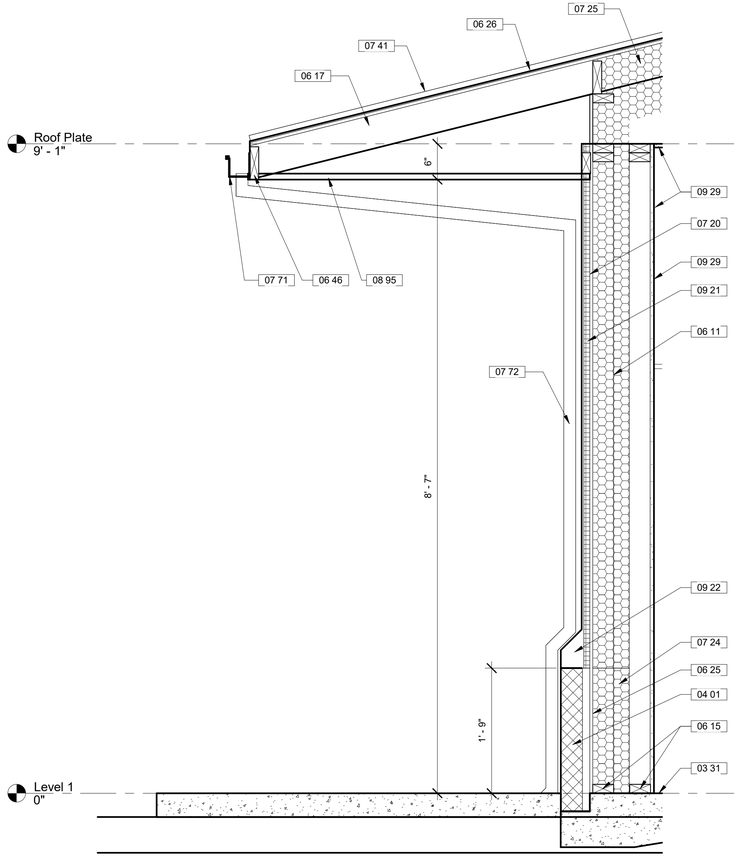

A2 TYP WALL @ EXT. OVERHANG
1" = 1'-0"

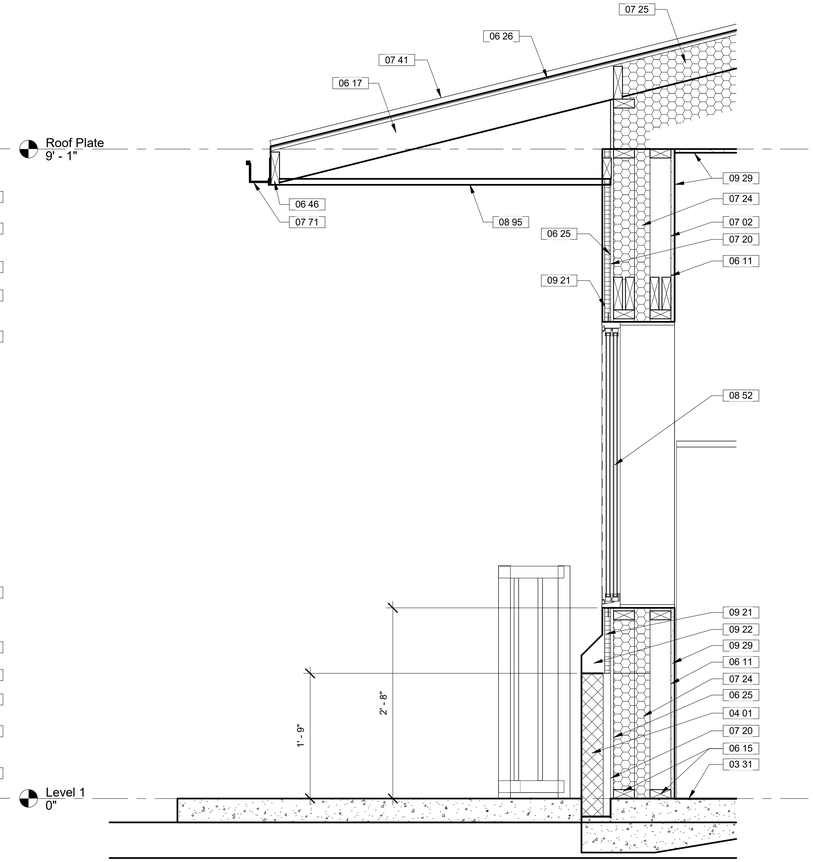

A4 WALL @ WINDOW
1" = 1'-0"

JSRa
JOHNSON SMITTHIPONG & ROSAMOND ASSOCIATES, INC.
5210 E Williams Cir • Ste 600 • Tucson, AZ 85711
(520) 547-7904 • www.jsra.com

Consultants:

ISSUED FOR INTERIM REVIEW
THIS DOCUMENT IS NOT TO BE USED FOR REGULATORY APPROVAL, PERMIT, OR CONSTRUCTION
Vernon Rosamond
Arizona Lic #: 9793
Date: 8/13/24

iHOUSE APARTMENT

Tonalea, AZ 86044

U. S. DEPARTMENT OF HEALTH AND HUMAN SERVICES
INDIAN HEALTH SERVICE
NAVAJO AREA OFFICE

No.	Date	Description

Issue Date:	8/13/24
Project No:	23-390
Scale:	1" = 1'-0"
Drawn By:	BARBOZA
Checked By:	HARGREAVES

PHASE IV (Final CD)

Sheet Title:

WALL SECTIONS

Sheet Number:

A303

Autodesk Docs://23-390 IHS iHouse Apt v2023/23-390 06 Arch iHouse Apt 2023.rvt
8/13/2024 2:30:38 PM

KEYNOTES	
Key #	Keynote Text
03 24	CAST IN PLACE CONCRETE RAMP - SLOPE SHALL NOT EXCEED 1:12.
06 11	2x4 WOOD STUDS AT 16" O.C.
06 17	WOOD TRUSS, REFERENCE STRUCTURAL.
06 18	GLUE-LAMINATED BEAM, REFERENCE STRUCTURAL.
06 25	1/2" PLYWOOD SHEATHING.
06 26	5/8" SHEATHING, REFERENCE STRUCTURAL.
06 46	2x6 WD FASCIA.
07 02	VAPOR RETARDER.
07 20	WEATHER BARRIER.
07 24	CLOSED CELL FOAMED-IN-PLACE INSULATION 4" MIN (R-24).
07 25	CLOSED CELL FOAMED-IN-PLACE INSULATION 9" MIN (R-60).
07 41	STANDING SEAM METAL ROOF.
07 71	METAL GUTTERS.
08 12	DOOR, REFERENCE DOOR SCHEDULE.
08 52	CASEMENT WINDOW.
08 95	METAL SOFFIT.
09 21	ONE-COAT STUCCO.
09 24	GLASS MAT WITH STUCCO FINISH CEILING SOFFIT.
09 29	5/8" TYPE 'X' GYPSUM BOARD.
26 57	WALL PACK, REFERENCE ELECTRICAL.
26 58	SURFACE MOUNTED LIGHT, REFERENCE ELECTRICAL.

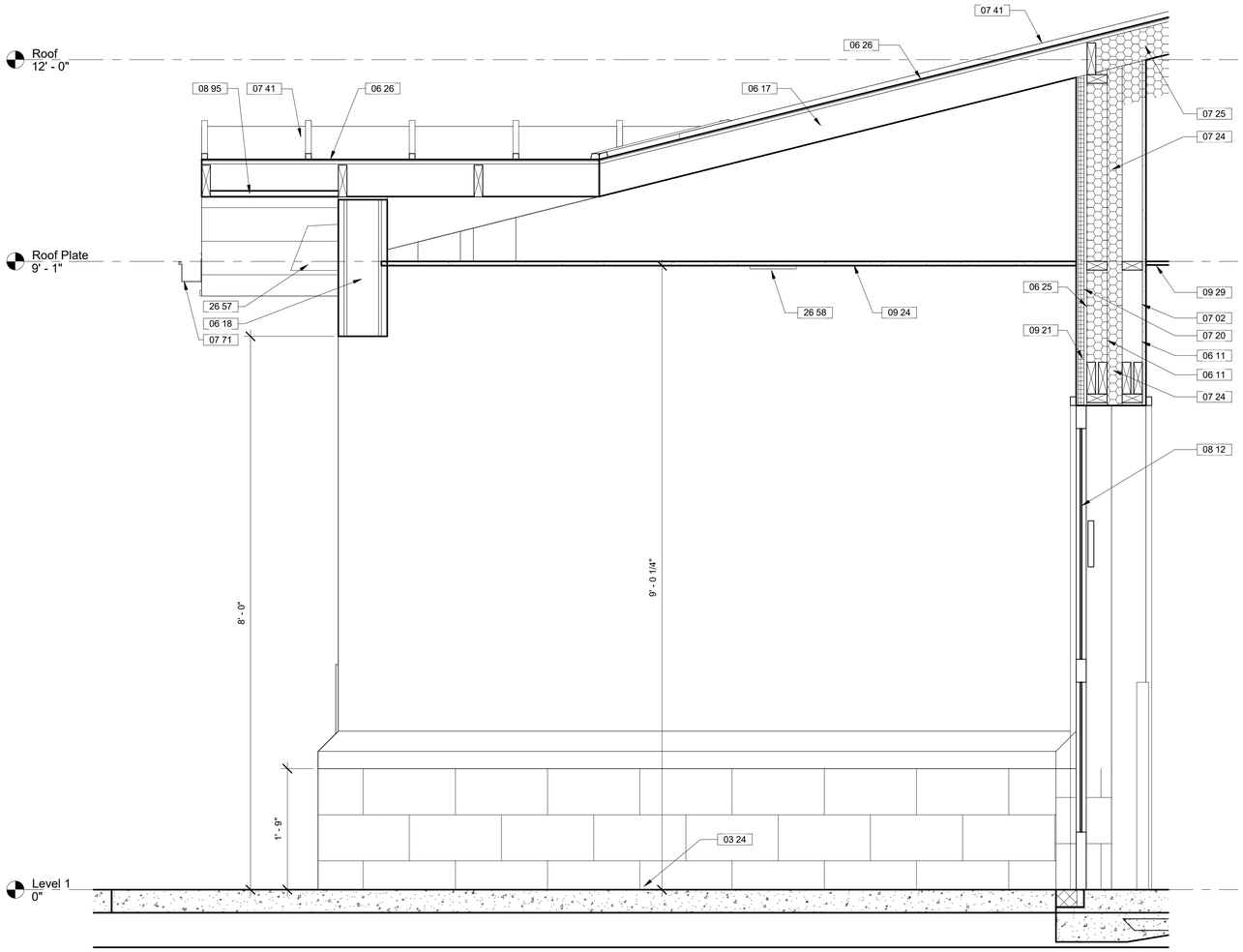

A1 MAIN ENTRY
1" = 1'-0"

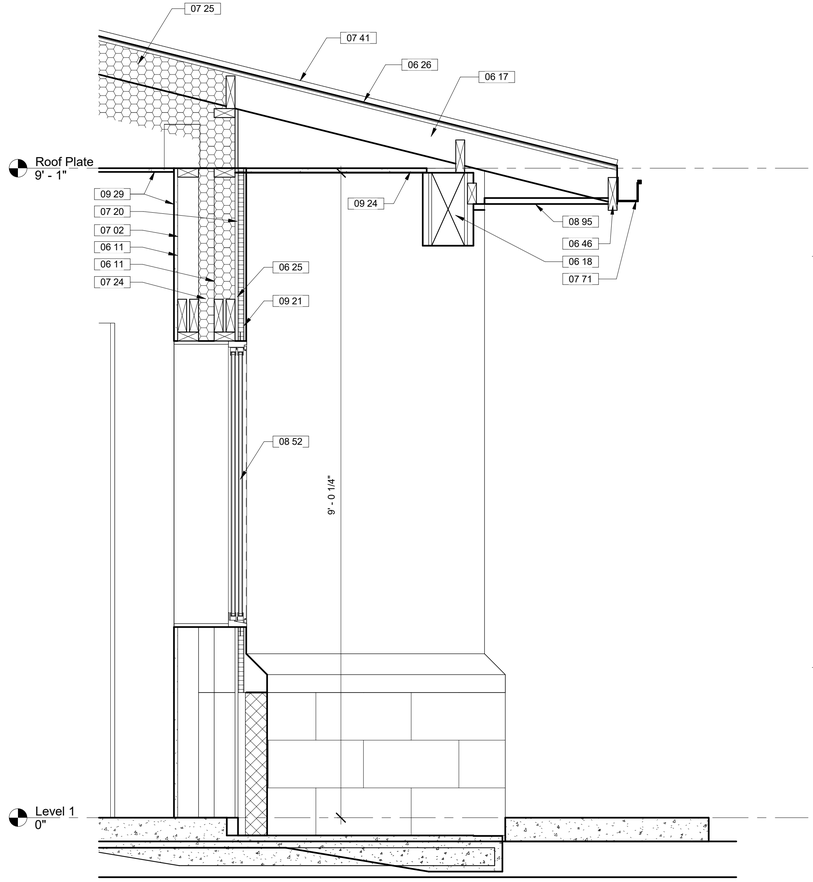

A4 PATIO @ 2 BEDROOM
1" = 1'-0"

JSRa
JOHNSON SMITTHIPONG & ROSAMOND ASSOCIATES, INC.
5210 E Williams Cir • Ste 600 • Tucson, AZ 85711
(520) 547-7904 • www.jsra.com

Consultants:

ISSUED FOR INTERIM REVIEW
THIS DOCUMENT IS NOT TO BE USED FOR REGULATORY APPROVAL, PERMIT, OR CONSTRUCTION
Vernon Rosamond
Arizona Lic #: 9793
Date: 8/13/24

iHOUSE APARTMENT

Tonalea, AZ 86044

U. S. DEPARTMENT OF HEALTH AND HUMAN SERVICES
INDIAN HEALTH SERVICE
NAVAJO AREA OFFICE

No.	Date	Description

Issue Date:	8/13/24
Project No:	23-390
Scale:	1" = 1'-0"
Drawn By:	BARBOZA
Checked By:	HARGREAVES

PHASE IV (Final CD)

Sheet Title:

WALL SECTIONS

Sheet Number:

A304

Autodesk Docs://23-390 IHS IHouse Apt v2023/23-390 06 Arch IHouse Apt 2023.rvt
8/13/2024 2:30:39 PM

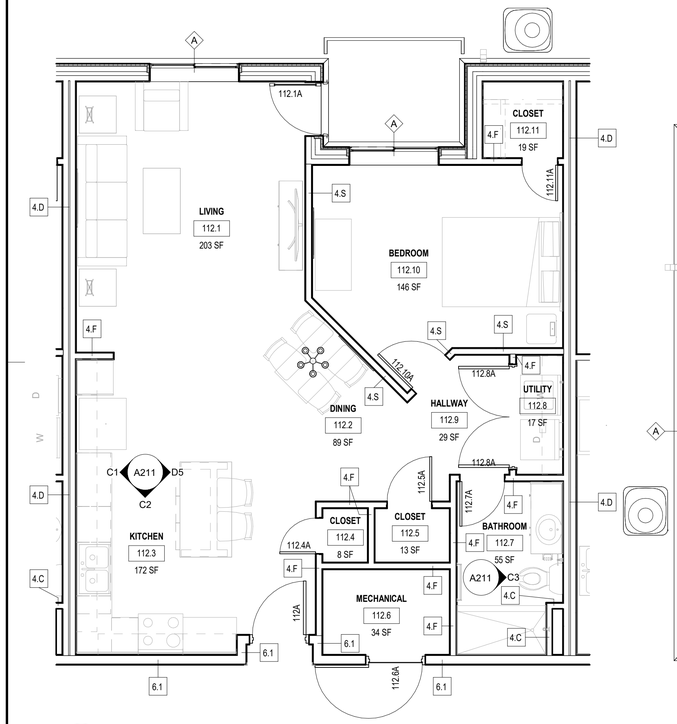

C1 1 BEDROOM APARTMENT
1/4" = 1'-0"

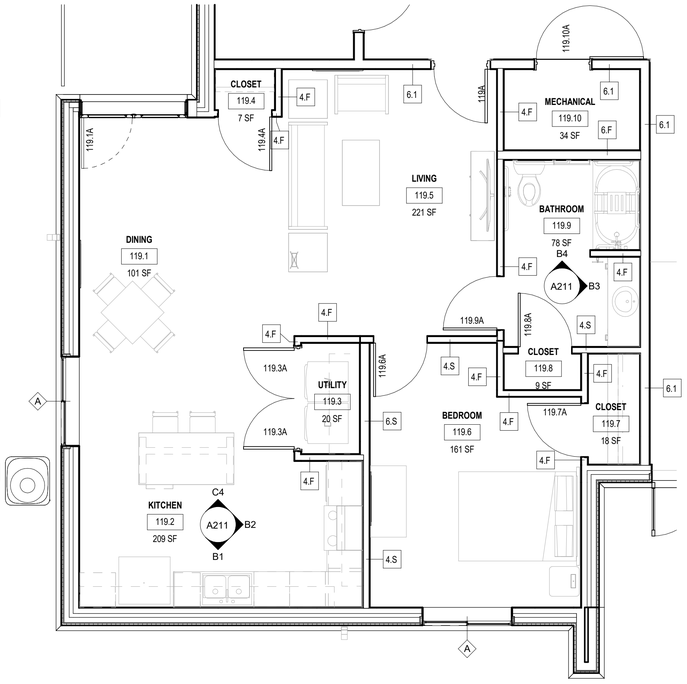

C2 ACCESSIBLE 1 BEDROOM APARTMENT
1/4" = 1'-0"

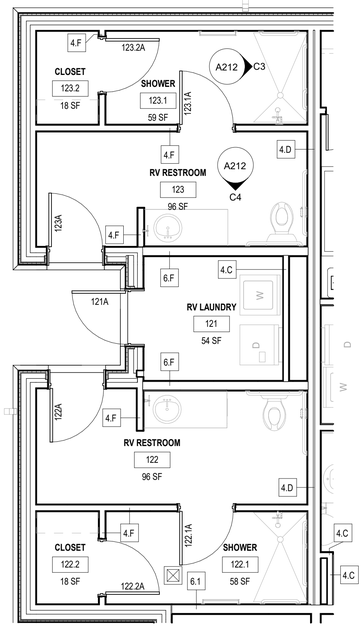

C3 FLOOR PLAN - RV RESTROOMS
1/4" = 1'-0"

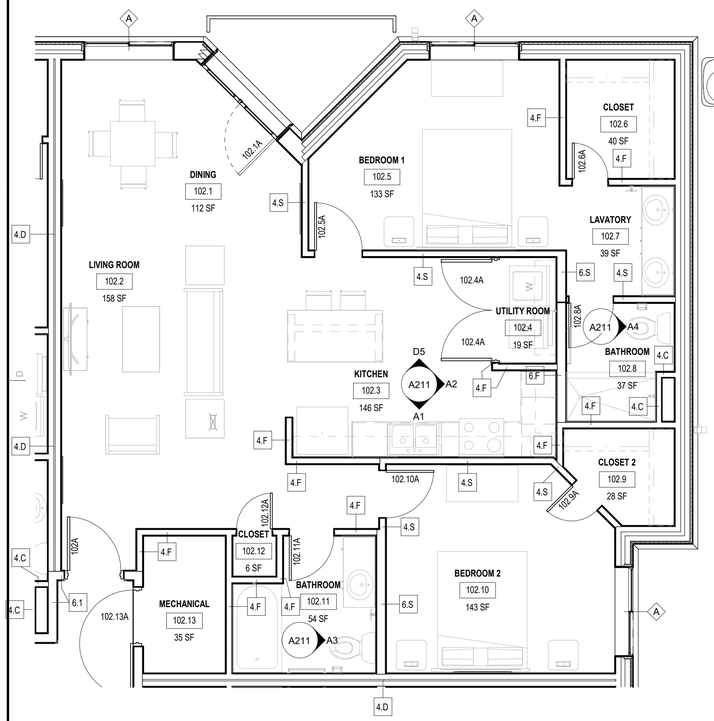

A1 2 BEDROOM APARTMENT
1/4" = 1'-0"

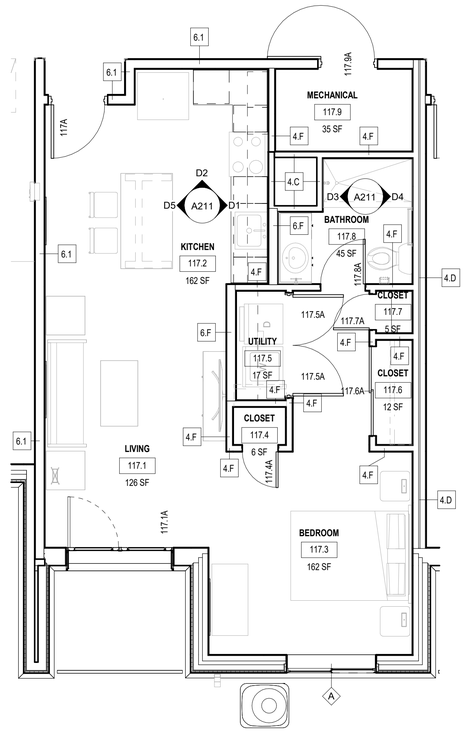

A2 EFFICIENCY APARTMENT
1/4" = 1'-0"

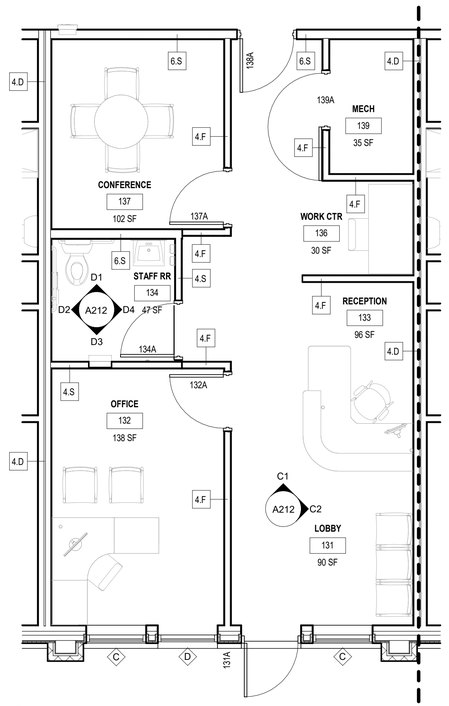

A3 STAFF OFFICE
1/4" = 1'-0"

JSRa
JOHNSON SMITTHIPONG & ROSAMOND ASSOCIATES, INC.
5210 E Williams Cir • Ste 600 • Tucson, AZ 85711
(520) 547-7904 • www.jsra.com

Consultants:

ISSUED FOR INTERIM REVIEW
THIS DOCUMENT IS NOT TO BE USED FOR REGULATORY APPROVAL, PERMIT, OR CONSTRUCTION
Vernon Rosamond
Arizona Lic #: 9793
Date: 8/13/24

iHOUSE APARTMENT

Tonalea, AZ 86044

U. S. DEPARTMENT OF HEALTH AND HUMAN SERVICES
INDIAN HEALTH SERVICE
NAVAJO AREA OFFICE

No.	Date	Description

Issue Date:	8/13/24
Project No:	23-390
Scale:	1/4" = 1'-0"
Drawn By:	BARBOZA
Checked By:	HARGREAVES

PHASE IV (Final CD)

Sheet Title:

ENLARGED FLOOR PLANS

Sheet Number:

A411

Autodesk Docs://23-390 IHS iHouse Apt v2023/23-390 06 Arch iHouse Apt 2023.rvt
8/13/2024 2:30:41 PM

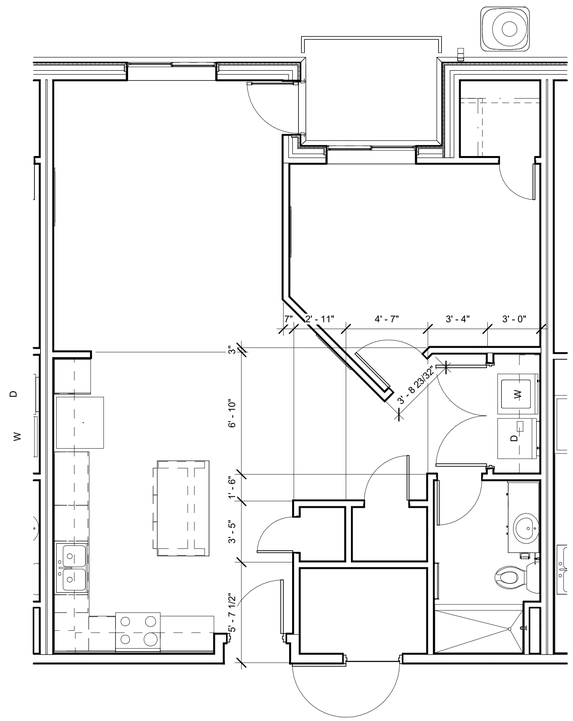

C1 1 BEDROOM
1/4" = 1'-0"

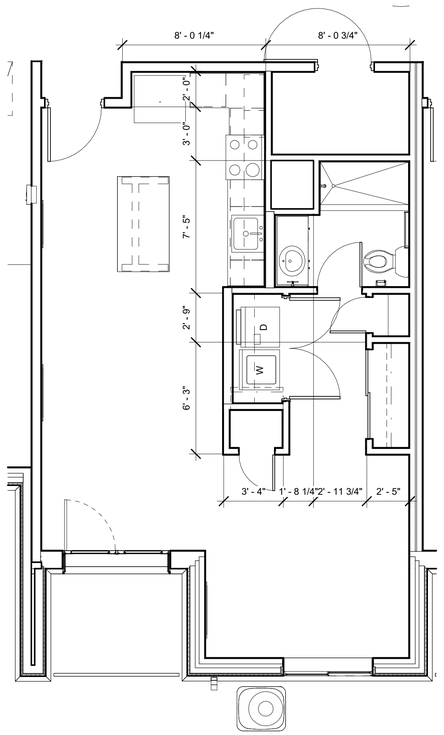

C2 EFFICIENCY
1/4" = 1'-0"

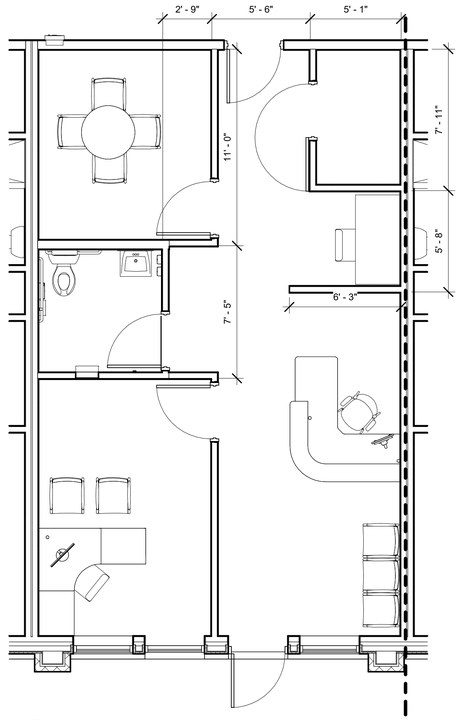

C3 STORAGE
1/4" = 1'-0"

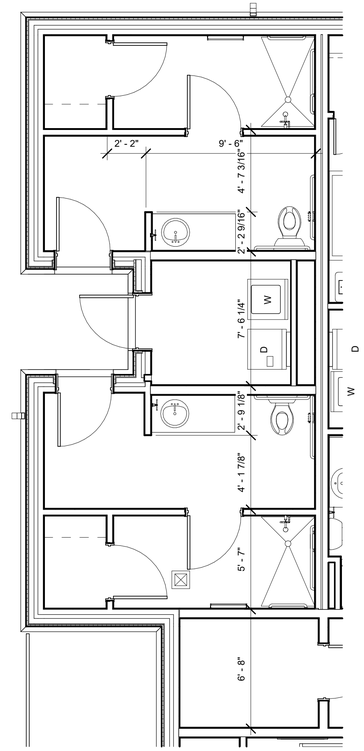

C5 PUBLIC BATHROOM
1/4" = 1'-0"

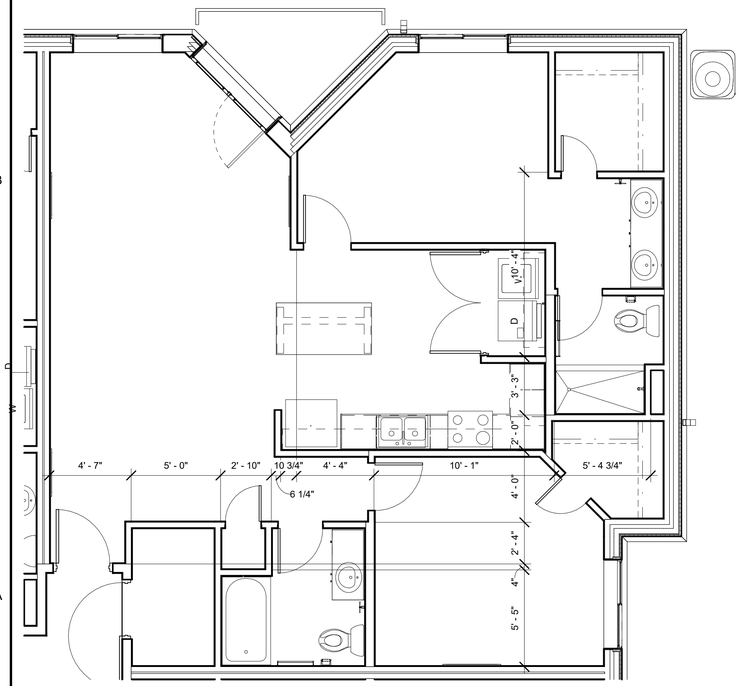

A1 2 BEDROOM
1/4" = 1'-0"

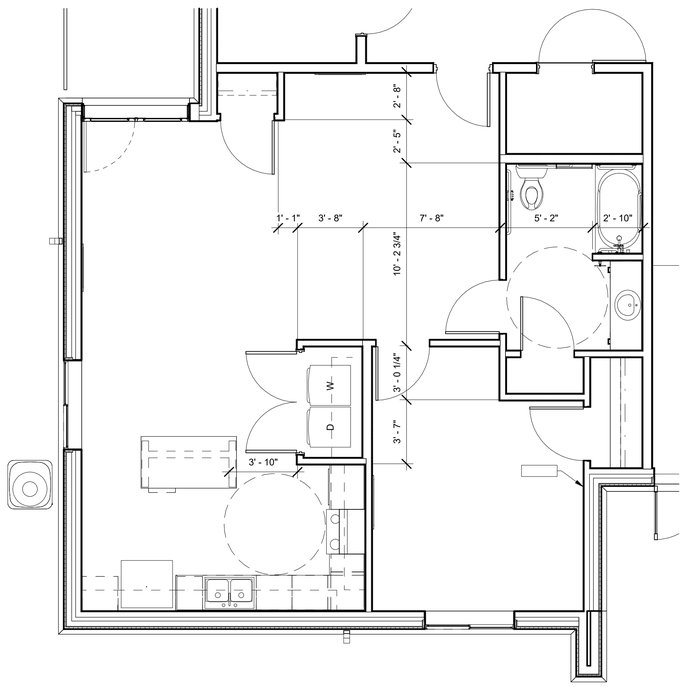

A3 1 BEDROOM ADA
1/4" = 1'-0"

JSRa
JOHNSON SMITTHIPONG & ROSAMOND ASSOCIATES, INC.
5210 E Williams Cir • Ste 600 • Tucson, AZ 85711
(520) 547-7904 • www.jsra.com

Consultants:

ISSUED FOR INTERIM REVIEW
THIS DOCUMENT IS NOT TO BE USED FOR REGULATORY APPROVAL, PERMIT, OR CONSTRUCTION
Vernon Rosamond
Arizona Lic #: 9793
Date: 8/13/24

iHOUSE APARTMENT

Tonalea, AZ 86044

U. S. DEPARTMENT OF HEALTH AND HUMAN SERVICES
INDIAN HEALTH SERVICE
NAVAJO AREA OFFICE

No.	Date	Description

Issue Date:	8/13/24
Project No:	23-390
Scale:	1/4" = 1'-0"
Drawn By:	BARBOZA
Checked By:	HARGREAVES

PHASE IV (Final CD)

Sheet Title:

DIMENSION ENLARGED FLOOR PLANS

Sheet Number:

A421

Autodesk Docs://23-390 IHS iHouse Apt v2023/23-390 06 Arch iHouse Apt 2023.rvt
8/13/2024 2:30:43 PM

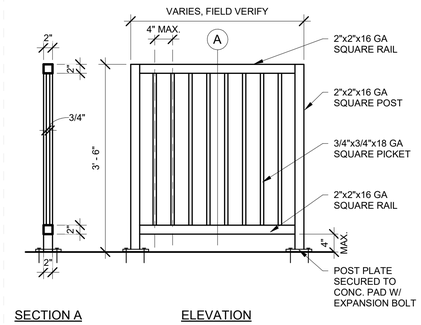

D3 EXTERIOR PATIO RAIL

3/4" = 1'-0"

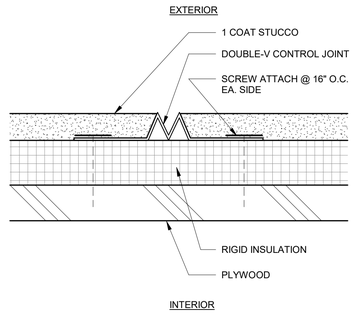

D4 STUCCO CONTROL JOINT

12" = 1'-0"

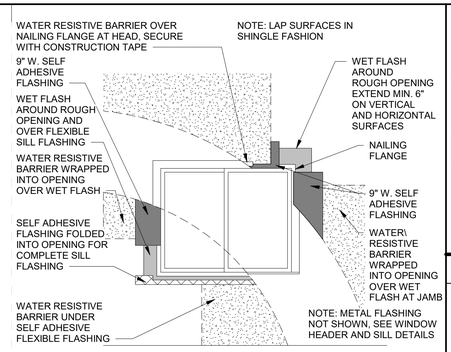

D5 WINDOW FLASHING EXTERIOR

3/8" = 1'-0"

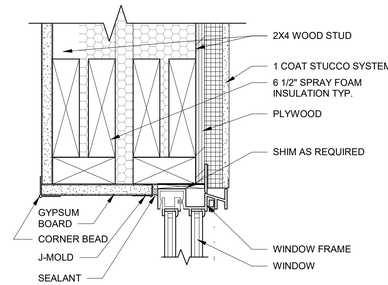

C5 WINDOW HEAD

3" = 1'-0"

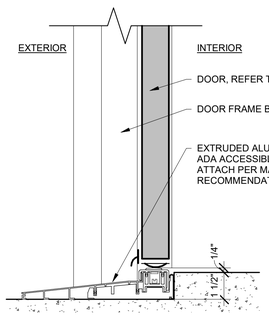

B4 DOOR PATIO SILL

3" = 1'-0"

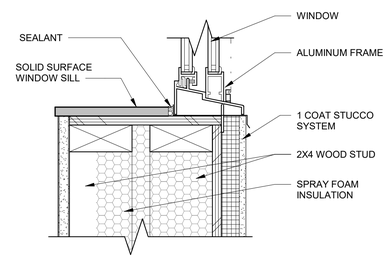

B5 WINDOW SILL

3" = 1'-0"

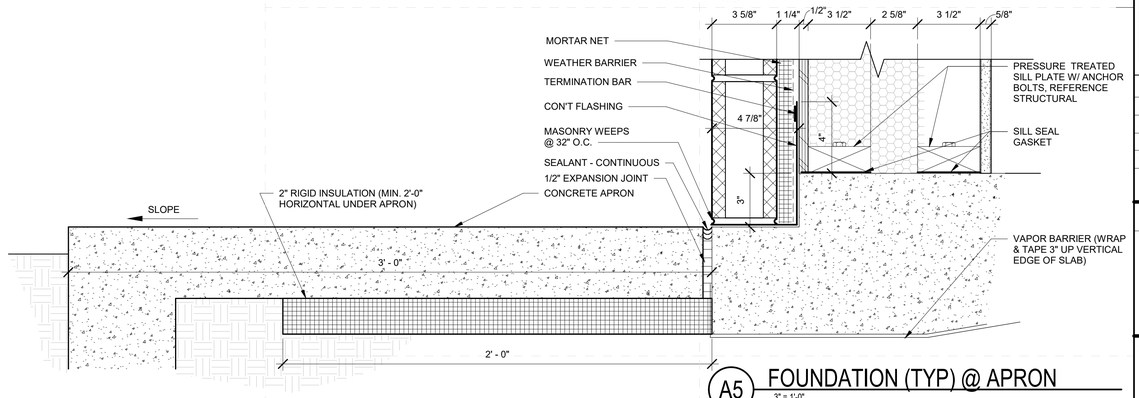

A5 FOUNDATION (TYP) @ APRON

3" = 1'-0"

JSRa
JOHNSON SMITTHIPONG & ROSAMOND ASSOCIATES, INC.
5210 E Williams Cir • Ste 600 • Tucson, AZ 85711
(520) 547-7904 • www.jsra.com

Consultants:

ISSUED FOR INTERIM REVIEW

THIS DOCUMENT IS NOT TO BE USED FOR REGULATORY APPROVAL, PERMIT, OR CONSTRUCTION

Vernon Rosamond
Arizona Lic #: 9793
Date: 8/13/24

iHOUSE APARTMENT

Tonalea, AZ 86044

U. S. DEPARTMENT OF HEALTH AND HUMAN SERVICES
INDIAN HEALTH SERVICE
NAVAJO AREA OFFICE

No.	Date	Description

Issue Date:	8/13/24
Project No:	23-390
Scale:	As indicated
Drawn By:	HARGREAVES
Checked By:	HARGREAVES

PHASE IV (Final CD)

Sheet Title:

EXTERIOR & DOOR DETAILS

Sheet Number:

A501

Autodesk Docs://23-390 IHS iHouse Apt v2023/23-390 06 Arch iHouse Apt 2023.rvt
8/13/2024 2:30:43 PM

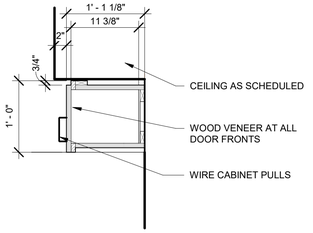

D1 UPPER CABINET (12")
1" = 1'-0"

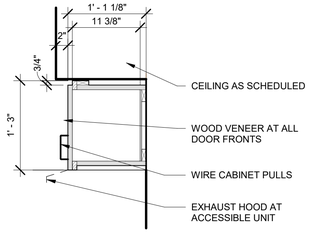

D2 UPPER CABINET (15")
1" = 1'-0"

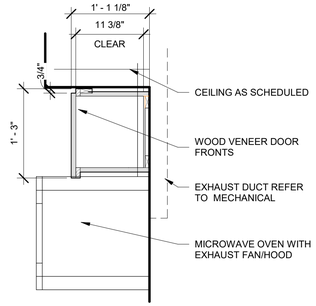

D3 UPPER CABINET (15") (MICRO)
1" = 1'-0"

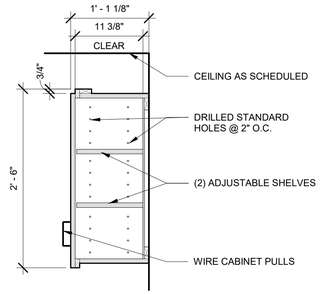

D4 UPPER CAB. W/SHELF (30")
1" = 1'-0"

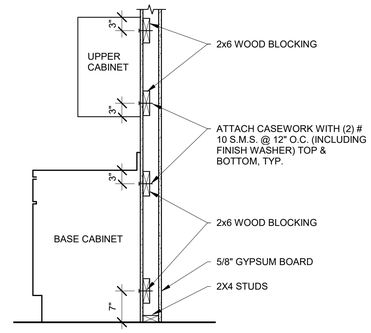

D5 MILLWORK ANCHORAGE
3/4" = 1'-0"

NOTE:
1. PROVIDE MATCHING END PANELS WHERE CABINET SIDES ARE EXPOSED (MATCH DOOR PANELS).
2. PROVIDE BACKSPLASH AT ALL EDGES AND ENDS AGAINST WALLS.

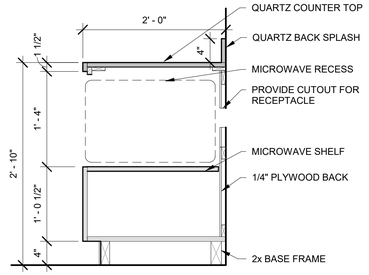

C1 (AC) MICRO SHELF (34")
1" = 1'-0"

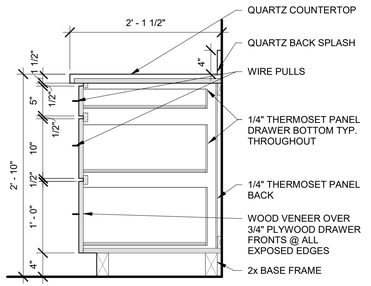

C2 BASE CAB. 3 DRAWER (34")
1" = 1'-0"

COUNTERTOPS IN ART ROOMS TO BE STAINLESS STEEL.

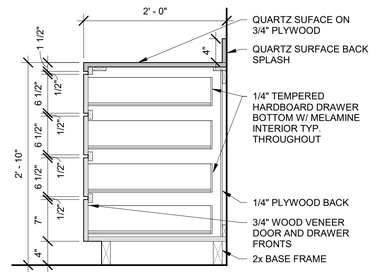

C3 BASE CAB. 4 DRAWER (34")
1" = 1'-0"

COUNTERTOPS IN ART ROOMS TO BE STAINLESS STEEL.

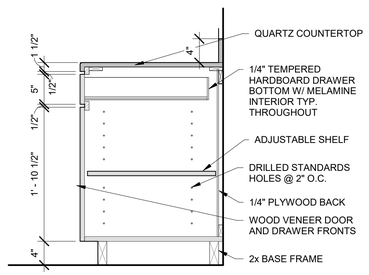

C4 BASE CAB. DRWR/SHELF (34")
1" = 1'-0"

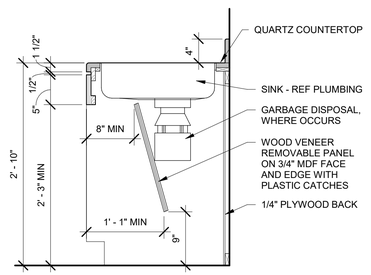

C5 ACCESSIBLE SINK (34")
1" = 1'-0"

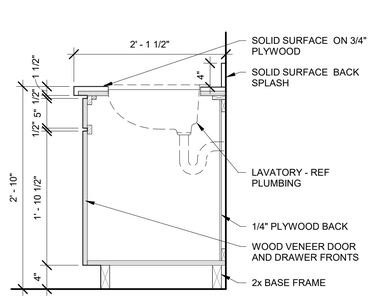

B1 BASE CAB. LAVATORY (34")
1" = 1'-0"

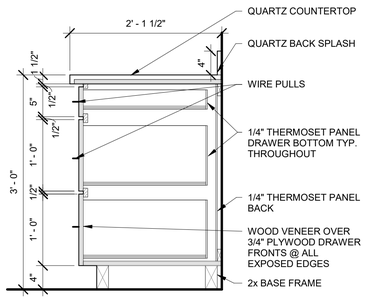

B2 BASE CAB. 3 DRAWER (36")
1" = 1'-0"

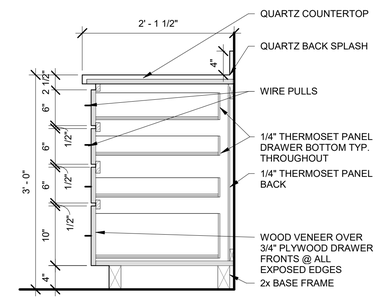

B3 BASE CAB. 4 DRAWER (36")
1" = 1'-0"

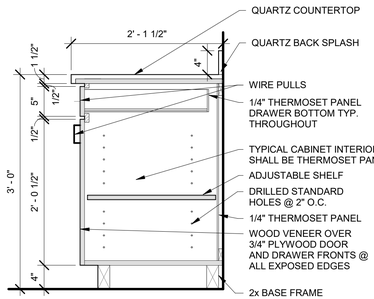

B4 BASE CAB. DRWR/SHELF (36")
1" = 1'-0"

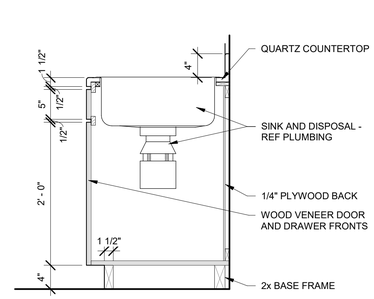

B5 BASE CAB. DOOR/SINK (36")
1" = 1'-0"

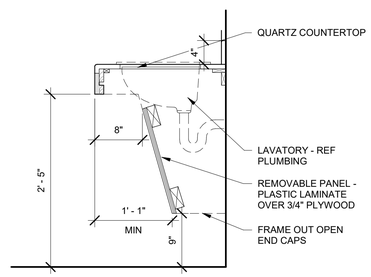

A1 ACCESSIBLE LAVATORY (34")
1" = 1'-0"

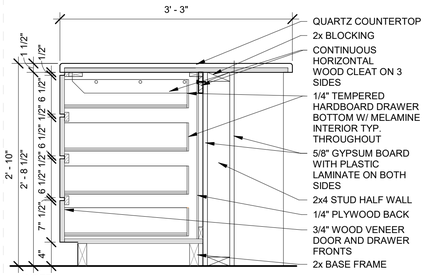

NOTE:
1. PROVIDE STAINED HARDWOOD END PANELS WHERE CABINET SIDES ARE EXPOSED (MATCH SURFACES).
2. PROVIDE BACKSPLASH AT ALL EDGES AND ENDS AGAINST WALLS.

A2 KITCHEN ISLAND 4 DRAWER (34")
1" = 1'-0"

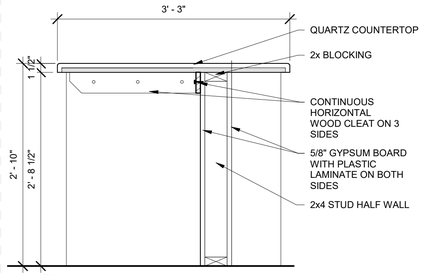

NOTE:
1. PROVIDE STAINED HARDWOOD END PANELS WHERE CABINET SIDES ARE EXPOSED (MATCH SURFACES).
2. PROVIDE BACKSPLASH AT ALL EDGES AND ENDS AGAINST WALLS.

A3 ACCESSIBLE KITCHEN ISLAND (34")
1" = 1'-0"

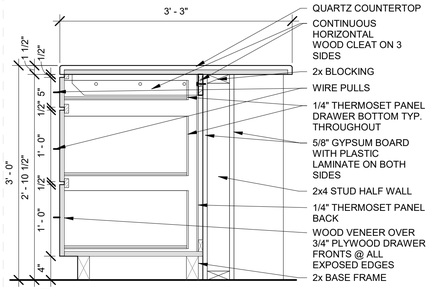

NOTE:
1. PROVIDE STAINED HARDWOOD END PANELS WHERE CABINET SIDES ARE EXPOSED (MATCH SURFACES).
2. PROVIDE BACKSPLASH AT ALL EDGES AND ENDS AGAINST WALLS.

A4 KITCHEN ISLAND 3 DRAWER (36")
1" = 1'-0"

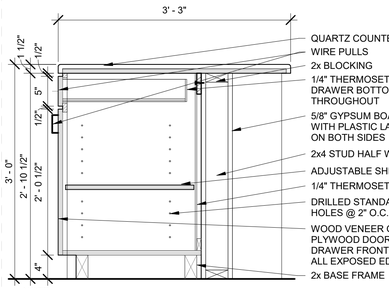

NOTE:
1. PROVIDE STAINED HARDWOOD END PANELS WHERE CABINET SIDES ARE EXPOSED (MATCH SURFACES).
2. PROVIDE BACKSPLASH AT ALL EDGES AND ENDS AGAINST WALLS.

A5 KITCHEN ISLAND DRWR/SHELF (36")
1" = 1'-0"

JSRa
JOHNSON SMITTHIPONG & ROSAMOND ASSOCIATES, INC.
5210 E Williams Cir • Ste 600 • Tucson, AZ 85711
(520) 547-7904 • www.jsra.com

Consultants:

ISSUED FOR INTERIM REVIEW
THIS DOCUMENT IS NOT TO BE USED FOR REGULATORY APPROVAL, PERMIT, OR CONSTRUCTION
Vernon Rosamond
Arizona Lic #: 9793
Date: 8/13/24

iHOUSE APARTMENT

Tonalea, AZ 86044

U. S. DEPARTMENT OF HEALTH AND HUMAN SERVICES
INDIAN HEALTH SERVICE
NAVAJO AREA OFFICE

No.	Date	Description

Issue Date:	8/13/24
Project No:	23-390
Scale:	As indicated
Drawn By:	HARGREAVES
Checked By:	HARGREAVES

PHASE IV (Final CD)

Sheet Title:

INTERIOR DETAILS

Sheet Number:

A511

Autodesk Docs://23-390 IHS iHouse Apt v2023/23-390 06 Arch iHouse Apt 2023.rvt
8/13/2024 2:30:44 PM

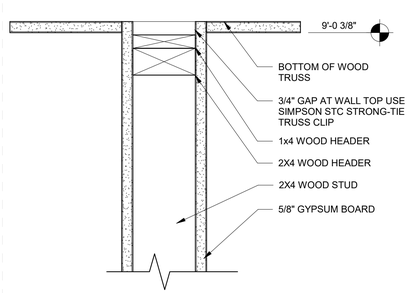

D2 TOP OF WALL GAP
3" = 1'-0"

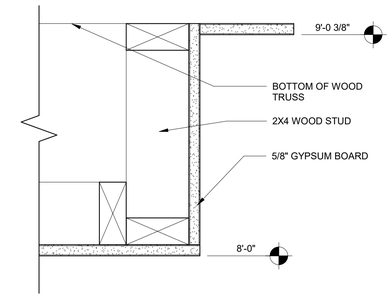

D3 GWB SOFFIT DETAIL
3" = 1'-0"

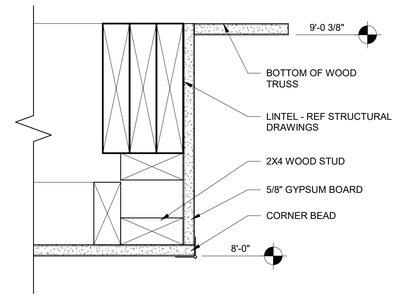

D4 SOFFIT at LINTEL
3" = 1'-0"

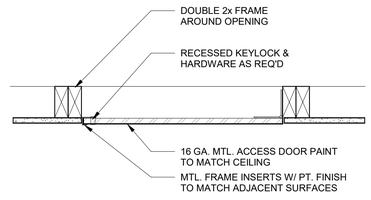

D5 ACCESS PANEL DETAIL
1 1/2" = 1'-0"

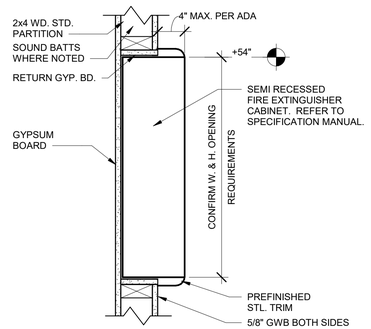

C3 FIRE EXTINGUISHER CABINET
1 1/2" = 1'-0"

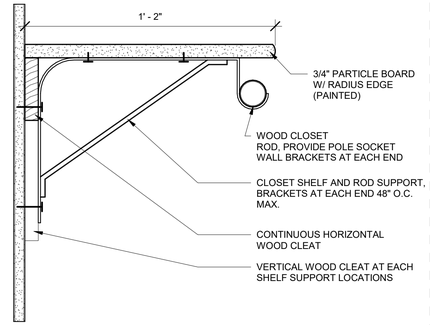

C4 ROD & SHELF DETAIL
3" = 1'-0"

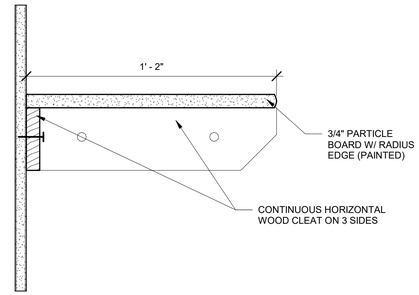

C5 CLOSET SHELF
3" = 1'-0"

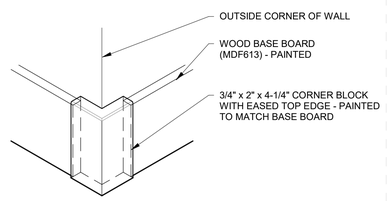

B3 INT WOOD BASE CORNER
3" = 1'-0"

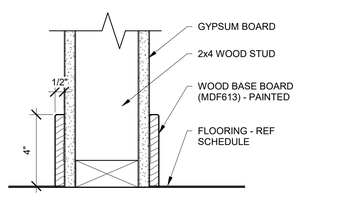

B4 INT WOOD BASE BD
3" = 1'-0"

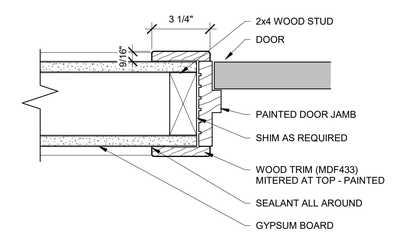

B5 INT DOOR JAMB
3" = 1'-0"

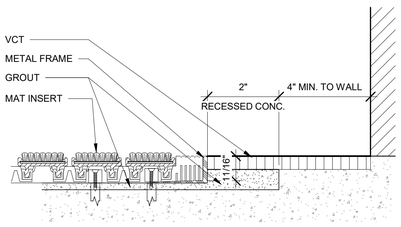

A3 RECESSED FLOOR MAT
6" = 1'-0"

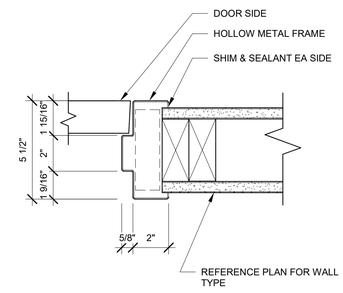

A4 HM @ GYP BD
3" = 1'-0"

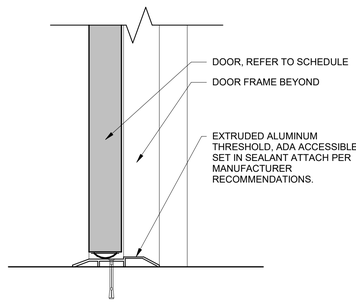

A5 DOOR SILL INTERIOR
3" = 1'-0"

JSRa
JOHNSON SMITTHIPONG & ROSAMOND ASSOCIATES, INC.
5210 E Williams Cir • Ste 600 • Tucson, AZ 85711
(520) 547-7904 • www.jsra.com

Consultants:

ISSUED FOR INTERIM REVIEW
THIS DOCUMENT IS NOT TO BE USED FOR REGULATORY APPROVAL, PERMIT, OR CONSTRUCTION
Vernon Rosamond
Arizona Lic #: 9793
Date: 8/13/24

iHOUSE APARTMENT

Tonalea, AZ 86044

U. S. DEPARTMENT OF HEALTH AND HUMAN SERVICES
INDIAN HEALTH SERVICE
NAVAJO AREA OFFICE

No.	Date	Description

Issue Date:	8/13/24
Project No:	23-390
Scale:	As indicated
Drawn By:	BARBOZA
Checked By:	HARGREAVES

PHASE IV (Final CD)

Sheet Title:

INTERIOR DETAILS

Sheet Number:

A512

Autodesk Docs://23-390 IHS iHouse Apt v2023/23-390 06 Arch iHouse Apt 2023.rvt
8/13/2024 2:30:44 PM

DOOR SCHEDULE - Entry

Mark	HW Set	Size			Type	Finish	Frame		UL Rating	Comments
		Width	Height	Thickness			Type	Material		
100.2A	1.01	6' - 0"	7' - 0"	1 3/4"	7	HM/GL	D	HM		
100.3A	1.01	6' - 0"	7' - 0"	1 3/4"	7	HM/GL	D	HM		

DOOR SCHEDULE - Unit 101

Mark	HW Set	Size			Type	Finish	Frame		UL Rating	Comments
		Width	Height	Thickness			Type	Material		
101.1A	3.01	6' - 0"	6' - 8"	1 3/4"	4	FG/GL				
101.4A	6.01	5' - 8"	7' - 8"	1 3/4"	1.2	MCHC		-		
101.5A	4.02	2' - 8"	6' - 8"	1 3/8"	3	MCHC		-		
101.6A	3.02	2' - 0"	6' - 8"	1 3/8"	3	MCHC		-		
101.8A	4.02	2' - 6"	6' - 8"	1 3/8"	3	MCHC		-		
101.9A	3.02	2' - 0"	6' - 8"	1 3/8"	3	MCHC		-		
101.10A	4.02	2' - 8"	6' - 8"	1 3/8"	3	MCHC		-		
101.11A	4.02	2' - 6"	6' - 8"	1 3/8"	3	MCHC		-		
101.12A	3.02	2' - 0"	6' - 8"	1 3/8"	3	MCHC		-		
101.13A	2.01	3' - 0"	6' - 8"	1 3/4"	1	WD	C	HM	20min	
101A	1.02	3' - 0"	6' - 8"	1 3/4"	1	WD	C	HM	20min	

DOOR SCHEDULE - Unit 102

Mark	HW Set	Size			Type	Finish	Frame		UL Rating	Comments
		Width	Height	Thickness			Type	Material		
102.1A	3.01	6' - 0"	6' - 8"	1 3/4"	4	FG/GL		-		
102.4A	6.01	5' - 8"	7' - 8"	1 3/4"	1.2	MCHC		-		
102.5A	4.02	2' - 8"	6' - 8"	1 3/8"	3	MCHC		-		
102.6A	3.02	2' - 0"	6' - 8"	1 3/8"	3	MCHC		-		
102.8A	4.02	2' - 6"	6' - 8"	1 3/8"	3	MCHC		-		
102.9A	3.02	2' - 0"	6' - 8"	1 3/8"	3	MCHC		-		
102.10A	4.02	2' - 8"	6' - 8"	1 3/8"	3	MCHC		-		
102.11A	4.02	2' - 6"	6' - 8"	1 3/8"	3	MCHC		-		
102.12A	3.02	2' - 0"	6' - 8"	1 3/8"	3	MCHC		-		
102.13A	2.01	3' - 0"	6' - 8"	1 3/4"	1	WD	C	HM	20min	
102A	1.02	3' - 0"	6' - 8"	1 3/4"	1	WD	C	HM	20min	

DOOR SCHEDULE - Unit 103

Mark	HW Set	Size			Type	Finish	Frame		UL Rating	Comments
		Width	Height	Thickness			Type	Material		
103.1A	3.01	6' - 0"	6' - 8"	1 3/4"	4	FG/GL		-		
103.4A	3.02	2' - 0"	6' - 8"	1 3/8"	3	MCHC		-		
103.5A	6.01	5' - 8"	7' - 8"	1 3/4"	1.2	MCHC		-		
103.6A	7.02	5' - 0"	6' - 8"	1 3/8"	4	MCHC		-		
103.7A	3.02	2' - 0"	6' - 8"	1 3/8"	3	MCHC		-		
103.8A	4.02	2' - 6"	6' - 8"	1 3/8"	3	MCHC		-		
103.9A	2.01	3' - 0"	6' - 8"	1 3/4"	1	WD	C	HM	20min	
103A	1.02	3' - 0"	6' - 8"	1 3/4"	1	WD	C	HM	20min	

DOOR SCHEDULE - Unit 104

Mark	HW Set	Size			Type	Finish	Frame		UL Rating	Comments
		Width	Height	Thickness			Type	Material		
104.1A	3.01	3' - 0"	6' - 8"	1 3/4"	4.1	FG/GL				
104.4A	3.02	2' - 0"	6' - 8"	1 3/8"	3	MCHC				
104.5A	3.02	2' - 6"	6' - 8"	1 3/8"	3	MCHC				
104.6A	2.01	3' - 0"	6' - 8"	1 3/4"	1	WD	C	HM	20min	
104.7A	4.02	2' - 6"	6' - 8"	1 3/8"	3	MCHC		-		
104.8A	6.01	5' - 8"	7' - 8"	1 3/4"	1.2	MCHC		-		
104.10A	4.02	2' - 8"	6' - 8"	1 3/8"	3	MCHC		-		
104.11A	3.02	2' - 0"	6' - 8"	1 3/8"	3	MCHC		-		
104A	1.02	3' - 0"	6' - 8"	1 3/4"	1	WD	C	HM	20min	

DOOR SCHEDULE - Unit 105

Mark	HW Set	Size			Type	Finish	Frame		UL Rating	Comments
		Width	Height	Thickness			Type	Material		
105.1A	3.01	6' - 0"	6' - 8"	1 3/4"	4	FG/GL		-		
105.4A	3.02	2' - 0"	6' - 8"	1 3/8"	3	MCHC		-		
105.5A	6.01	5' - 8"	7' - 8"	1 3/4"	1.2	MCHC		-		
105.6A	7.02	5' - 0"	6' - 8"	1 3/8"	4	MCHC		-		
105.7A	3.02	2' - 0"	6' - 8"	1 3/8"	3	MCHC		-		
105.8A	4.02	2' - 6"	6' - 8"	1 3/8"	3	MCHC		-		
105.9A	2.01	3' - 0"	6' - 8"	1 3/4"	1	WD	C	HM	20min	
105A	1.02	3' - 0"	6' - 8"	1 3/4"	1	WD	C	HM	20MIN	

DOOR SCHEDULE - Unit 106

Mark	HW Set	Size			Type	Finish	Frame		UL Rating	Comments
		Width	Height	Thickness			Type	Material		
106.1A	3.01	3' - 0"	6' - 8"	1 3/4"	4.1	FG/GL		-		
106.4A	3.02	2' - 0"	6' - 8"	1 3/8"	3	MCHC				
106.5A	3.02	2' - 6"	6' - 8"	1 3/8"	3	MCHC				
106.6A	2.01	3' - 0"	6' - 8"	1 3/4"	1	WD	C	HM	20min	
106.7A	4.02	2' - 6"	6' - 8"	1 3/8"	3	MCHC		-		
106.8A	6.01	5' - 8"	7' - 8"	1 3/4"	1.2	MCHC		-		
106.10A	4.02	2' - 8"	6' - 8"	1 3/8"	3	MCHC		-		
106.11A	3.02	2' - 0"	6' - 8"	1 3/8"	3	MCHC		-		
106A	1.02	3' - 0"	6' - 8"	1 3/4"	1	WD	C	HM	20min	

DOOR SCHEDULE - Unit 107

Mark	HW Set	Size			Type	Finish	Frame		UL Rating	Comments
		Width	Height	Thickness			Type	Material		
107.1A	3.01	6' - 0"	6' - 8"	1 3/4"	4	FG/GL				
107.4A	3.02	2' - 0"	6' - 8"	1 3/8"	3	MCHC		-		
107.5A	6.01	5' - 8"	7' - 8"	1 3/4"	1.2	MCHC		-		
107.6A	7.02	5' - 0"	6' - 8"	1 3/8"	4	MCHC		-		
107.7A	3.02	2' - 0"	6' - 8"	1 3/8"	3	MCHC		-		
107.8A	4.02	2' - 6"	6' - 8"	1 3/8"	3	MCHC		-		
107.9A	2.01	3' - 0"	6' - 8"	1 3/4"	1	WD	C	HM	20min	
107A	1.02	3' - 0"	6' - 8"	1 3/4"	1	WD	C	HM	20min	

DOOR SCHEDULE - Unit 108

Mark	HW Set	Size			Type	Finish	Frame		UL Rating	Comments
		Width	Height	Thickness			Type	Material		
108.1A	3.01	3' - 0"	6' - 8"	1 3/4"	4.1	FG/GL				
108.4A	3.02	2' - 0"	6' - 8"	1 3/8"	3	MCHC				
108.5A	3.02	2' - 6"	6' - 8"	1 3/8"	3	MCHC				
108.6A	2.01	3' - 0"	6' - 8"	1 3/4"	1	WD	C	HM	20min	
108.7A	4.02	2' - 6"	6' - 8"	1 3/8"	3	MCHC		-		
108.8A	6.01	5' - 8"	7' - 8"	1 3/4"	1.2	MCHC		-		
108.10A	4.02	2' - 8"	6' - 8"	1 3/8"	3	MCHC		-		
108.11A	3.02	2' - 0"	6' - 8"	1 3/8"	3	MCHC		-		
108A	1.02	3' - 0"	6' - 8"	1 3/4"	1	WD	C	HM	20min	

DOOR SCHEDULE - Unit 109

Mark	HW Set	Size			Type	Finish	Frame		UL Rating	Comments
		Width	Height	Thickness			Type	Material		
108.1A	3.01	3' - 0"	6' - 8"	1 3/4"	4.1	FG/GL				
108.4A	3.02	2' - 0"	6' - 8"	1 3/8"	3	MCHC				
108.5A	3.02	2' - 6"	6' - 8"	1 3/8"	3	MCHC				
108.6A	2.01	3' - 0"	6' - 8"	1 3/4"	1	WD	C	HM	20min	
108.7A	4.02	2' - 6"	6' - 8"	1 3/8"	3	MCHC		-		
108.8A	6.01	5' - 8"	7' - 8"	1 3/4"	1.2	MCHC		-		
108.10A	4.02	2' - 8"	6' - 8"	1 3/8"	3	MCHC		-		
108.11A	3.02	2' - 0"	6' - 8"	1 3/8"	3	MCHC		-		
108A	1.02	3' - 0"	6' - 8"	1 3/4"	1	WD	C	HM	20min	

DOOR SCHEDULE - Unit 110

Mark	HW Set	Size			Type	Finish	Frame		UL Rating	Comments
		Width	Height	Thickness			Type	Material		
110.1A	3.01	3' - 0"	6' - 8"	1 3/4"	4.1	FG/GL				
110.4A	3.02	2' - 0"	6' - 8"	1 3/8"	3	MCHC				
110.5A	3.02	2' - 6"	6' - 8"	1 3/8"	3	MCHC				
110.6A	2.01	3' - 0"	6' - 8"	1 3/4"	1	WD	C	HM	20min	
110.7A	4.02	2' - 6"	6' - 8"	1 3/8"	3	MCHC		-		
110.8A	6.01	5' - 8"	7' - 8"	1 3/4"	1.2	MCHC		-		
110.10A	4.02	2' - 8"	6' - 8"	1 3/8"	3	MCHC		-		
110.11A	3.02	2' - 0"	6' - 8"	1 3/8"	3	MCHC		-		
110A	1.02	3' - 0"	6' - 8"	1 3/4"	1	WD	C	HM	20min	

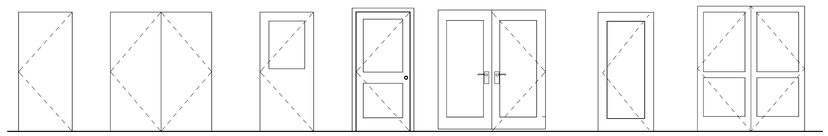

Door Types
1/4" = 1'-0"

JSRa
JOHNSON SMITTHIPONG & ROSAMOND ASSOCIATES, INC.
5210 E Williams Cir • Ste 600 • Tucson, AZ 85711
(520) 547-7904 • www.jsra.com

Consultants:

ISSUED FOR INTERIM REVIEW
THIS DOCUMENT IS NOT TO BE USED FOR REGULATORY APPROVAL, PERMIT, OR CONSTRUCTION
Vernon Rosamond
Arizona Lic #: 9793
Date: 8/13/24

iHOUSE APARTMENT

Tonalea, AZ 86044

U. S. DEPARTMENT OF HEALTH AND HUMAN SERVICES
INDIAN HEALTH SERVICE
NAVAJO AREA OFFICE

No.	Date	Description

Issue Date:	8/13/24
Project No:	23-390
Scale:	1/4" = 1'-0"
Drawn By:	HARGREAVES
Checked By:	HARGREAVES

PHASE IV (Final CD)

Sheet Title:

DOOR SCHEDULES 100 thru 110

Sheet Number:

A601

Autodesk Docs://23-390 IHS iHouse Apt v2023/23-390 06 Arch iHouse Apt 2023.rvt
8/13/2024 2:30:45 PM

DOOR SCHEDULE - Unit 111

Mark	HW Set	Size			Type	Finish	Frame		UL Rating	Comments
		Width	Height	Thickness			Type	Material		
111.1A	3.01	6' - 0"	6' - 8"	1 3/4"	4	FG/GL				
111.4A	3.02	2' - 0"	6' - 8"	1 3/8"	3	MCHC		-		
111.5A	6.01	5' - 8"	7' - 8"	1 3/4"	1.2	MCHC		-		
111.6A	7.02	5' - 0"	6' - 8"	1 3/8"	4	MCHC		-		
111.7A	3.02	2' - 0"	6' - 8"	1 3/8"	3	MCHC		-		
111.8A	4.02	2' - 6"	6' - 8"	1 3/8"	3	MCHC		-		
111.9A	2.01	3' - 0"	6' - 8"	1 3/4"	1	WD	C	HM	20min	
111A	1.02	3' - 0"	6' - 8"	1 3/4"	1	WD	C	HM	20min	

DOOR SCHEDULE - Unit 112

Mark	HW Set	Size			Type	Finish	Frame		UL Rating	Comments
		Width	Height	Thickness			Type	Material		
112.1A	3.01	3' - 0"	6' - 8"	1 3/4"	4.1	FG/GL		-		
112.4A	3.02	2' - 0"	6' - 8"	1 3/8"	3	MCHC		-		
112.5A	3.02	2' - 6"	6' - 8"	1 3/8"	3					
112.6A	2.01	3' - 0"	6' - 8"	1 3/4"	1	WD	C	HM	20min	
112.7A	4.02	2' - 6"	6' - 8"	1 3/8"	3	MCHC		-		
112.8A	6.01	5' - 8"	7' - 8"	1 3/4"	1.2	MCHC		-		
112.10A	4.02	2' - 8"	6' - 8"	1 3/8"	3	MCHC		-		
112.11A	3.02	2' - 0"	6' - 8"	1 3/8"	3	MCHC		-		
112A	1.02	3' - 0"	6' - 8"	1 3/4"	1	WD	C	HM	20min	

DOOR SCHEDULE - Unit 113

Mark	HW Set	Size			Type	Finish	Frame		UL Rating	Comments
		Width	Height	Thickness			Type	Material		
113.1A	3.01	6' - 0"	6' - 8"	1 3/4"	4	FG/GL				
113.4A	3.02	2' - 0"	6' - 8"	1 3/8"	3	MCHC		-		
113.5A	6.01	4' - 6"	6' - 8"	1 3/4"	3	MCHC		-		
113.6A	7.02	5' - 0"	6' - 8"	1 3/8"	4	MCHC		-		
113.7A	3.02	2' - 0"	6' - 8"	1 3/8"	3	MCHC		-		
113.8A	4.02	2' - 6"	6' - 8"	1 3/8"	3	MCHC		-		
113.9A	2.01	3' - 0"	6' - 8"	1 3/4"	1	WD	C	HM	20min	
113A	1.02	3' - 0"	6' - 8"	1 3/4"	1	WD	C	HM	20min	

DOOR SCHEDULE - Unit 114

Mark	HW Set	Size			Type	Finish	Frame		UL Rating	Comments
		Width	Height	Thickness			Type	Material		
114.1A	3.01	3' - 0"	6' - 8"	1 3/4"	4.1	FG/GL				
114.4A	3.02	2' - 0"	6' - 8"	1 3/8"	3					
114.5A	3.02	2' - 6"	6' - 8"	1 3/8"	3					
114.6A	2.01	3' - 0"	6' - 8"	1 3/4"	1	WD	C	HM	20min	
114.7A	4.02	2' - 6"	6' - 8"	1 3/8"	3	MCHC		-		
114.8A	6.01	5' - 8"	7' - 8"	1 3/4"	1.2	MCHC		-		
114.10A	4.02	2' - 8"	6' - 8"	1 3/8"	3	MCHC		-		
114.11A	3.02	2' - 0"	6' - 8"	1 3/8"	3	MCHC		-		
114A	1.02	3' - 0"	6' - 8"	1 3/4"	1	WD	C	HM	20min	

DOOR SCHEDULE - Unit 115

Mark	HW Set	Size			Type	Finish	Frame		UL Rating	Comments
		Width	Height	Thickness			Type	Material		
115.1A	3.01	6' - 0"	6' - 8"	1 3/4"	4	FG/GL				
115.4A	3.02	2' - 0"	6' - 8"	1 3/8"	3	MCHC		-		
115.5A	6.01	5' - 8"	7' - 8"	1 3/4"	1.2	MCHC		-		
115.6A	7.02	5' - 0"	6' - 8"	1 3/8"	4	MCHC		-		
115.7A	3.02	2' - 0"	6' - 8"	1 3/8"	3	MCHC		-		
115.8A	4.02	2' - 6"	6' - 8"	1 3/8"	3	MCHC		-		
115.9A	2.01	3' - 0"	6' - 8"	1 3/4"	1	WD	C	HM	20min	
115A	1.02	3' - 0"	6' - 8"	1 3/4"	1	WD	C	HM	20min	

DOOR SCHEDULE - Unit 116

Mark	HW Set	Size			Type	Finish	Frame		UL Rating	Comments
		Width	Height	Thickness			Type	Material		
116.1A	3.01	3' - 0"	6' - 8"	1 3/4"	4.1	FG/GL				
116.4A	3.02	2' - 0"	6' - 8"	1 3/8"	3					
116.5A	3.02	2' - 6"	6' - 8"	1 3/8"	3					
116.6A	2.01	3' - 0"	6' - 8"	1 3/4"	1	WD	C	HM	20min	
116.7A	4.02	2' - 6"	6' - 8"	1 3/8"	3	MCHC		-		
116.8A	6.01	5' - 8"	7' - 8"	1 3/4"	1.2	MCHC		-		
116.10A	4.02	2' - 8"	6' - 8"	1 3/8"	3	MCHC		-		
116.11A	3.02	2' - 0"	6' - 8"	1 3/8"	3	MCHC		-		
116A	1.02	3' - 0"	6' - 8"	1 3/4"	1	WD	C	HM	20min	

DOOR SCHEDULE - Unit 117

Mark	HW Set	Size			Type	Finish	Frame		UL Rating	Comments
		Width	Height	Thickness			Type	Material		
117.1A	3.01	6' - 0"	6' - 8"	1 3/4"	4	FG/GL		-		
117.4A	3.02	2' - 0"	6' - 8"	1 3/8"	3	MCHC		-		
117.5A	6.01	5' - 8"	7' - 8"	1 3/4"	1.2	MCHC		-		
117.6A	7.02	5' - 0"	6' - 8"	1 3/8"	4	MCHC		-		
117.7A	3.02	2' - 0"	6' - 8"	1 3/8"	3	MCHC		-		
117.8A	4.02	2' - 6"	6' - 8"	1 3/8"	3	MCHC		-		
117.9A	2.01	3' - 0"	6' - 8"	1 3/4"	1	WD	C	HM	20min	
117A	1.02	3' - 0"	6' - 8"	1 3/4"	1	WD	C	HM	20min	

DOOR SCHEDULE - Unit 118

Mark	HW Set	Size			Type	Finish	Frame		UL Rating	Comments
		Width	Height	Thickness			Type	Material		
118.1A	3.01	3' - 0"	6' - 8"	1 3/4"	4.1	FG/GL				
118.4A	3.02	2' - 0"	6' - 8"	1 3/8"	3					
118.5A	3.02	2' - 6"	6' - 8"	1 3/8"	3					
118.6A	2.01	3' - 0"	6' - 8"	1 3/4"	1	WD	C	HM	20min	
118.7A	4.02	2' - 6"	6' - 8"	1 3/8"	3	MCHC		-		
118.8A	6.01	5' - 8"	7' - 8"	1 3/4"	1.2	MCHC		-		
118.10A	4.02	2' - 8"	6' - 8"	1 3/8"	3	MCHC		-		
118.11A	3.02	2' - 0"	6' - 8"	1 3/8"	3	MCHC		-		
118A	1.02	3' - 0"	6' - 8"	1 3/4"	1	WD	C	HM	20min	

DOOR SCHEDULE - Unit 119

Mark	HW Set	Size			Type	Finish	Frame		UL Rating	Comments
		Width	Height	Thickness			Type	Material		
119.1A	3.01	6' - 0"	6' - 8"	1 3/4"	4	FG/GL		-		DOOR LEAF = 3'-0"
119.3A	6.01	5' - 8"	7' - 8"	1 3/4"	1.2	MCHC		-		
119.4A	3.02	3' - 0"	6' - 8"	1 3/8"	3	MCHC		-		
119.6A	4.02	3' - 0"	6' - 8"	1 3/8"	3	MCHC		-		
119.7A	3.02	3' - 0"	6' - 8"	1 3/8"	3	MCHC		-		
119.8A	3.02	3' - 0"	6' - 8"	1 3/8"	3					
119.9A	4.02	3' - 0"	6' - 8"	1 3/8"	3	MCHC		-		
119.10A	2.01	3' - 0"	6' - 8"	1 3/4"	1	WD	C	HM	20min	
119A	1.02	3' - 0"	6' - 8"	1 3/4"	1	WD	C	HM	20min	

DOOR SCHEDULE - 12x

Mark	HW Set	Size			Type	Finish	Frame		UL Rating	Comments
		Width	Height	Thickness			Type	Material		
120A	2.01	3' - 0"	7' - 0"	1 3/4"	1					
121A	7.01	3' - 0"	7' - 0"	1 3/4"	1					
122.1A	4.03	3' - 0"	7' - 0"	1 3/4"	1					
122.2A	2.02	3' - 0"	7' - 0"	1 3/4"	1					
122A	7.01	3' - 0"	7' - 0"	1 3/4"	1					
123.1A	4.03	3' - 0"	7' - 0"	1 3/4"	1					
123.2A	2.02	3' - 0"	7' - 0"	1 3/4"	1					
123A	7.01	3' - 0"	7' - 0"	1 3/4"	1					

DOOR SCHEDULE - 13x

Mark	HW Set	Size			Type	Finish	Frame		UL Rating	Comments
		Width	Height	Thickness			Type	Material		
131A	5.01	3' - 0"	7' - 0"	1 3/4"	9	HM	D	HM		
132A	1.03	3' - 0"	6' - 8"	1 3/4"	2	WD		HM		
134A	4.04	3' - 0"	6' - 8"	1 3/4"	1	HM	C	HM		
137A	1.03	3' - 0"	6' - 8"	1 3/4"	2	WD		HM		
138A	1.03	3' - 0"	6' - 8"	1 3/4"	1	WD	C	HM	20min	
139A	2.01	3' - 0"	6' - 8"	1 3/4"	1	WD	C	HM		

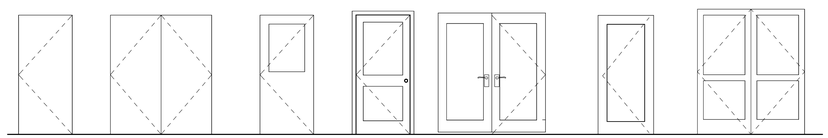

Door Types
1/4" = 1'-0"

JSRa
JOHNSON SMITTHIPONG & ROSAMOND ASSOCIATES, INC.
5210 E Williams Cir • Ste 600 • Tucson, AZ 85711
(520) 547-7904 • www.jsra.com

Consultants:

ISSUED FOR INTERIM REVIEW
THIS DOCUMENT IS NOT TO BE USED FOR REGULATORY APPROVAL, PERMIT, OR CONSTRUCTION
Vernon Rosamond
Arizona Lic #: 9793
Date: 8/13/24

iHOUSE APARTMENT

Tonalea, AZ 86044

U. S. DEPARTMENT OF HEALTH AND HUMAN SERVICES
INDIAN HEALTH SERVICE
NAVAJO AREA OFFICE

No.	Date	Description

Issue Date:	8/13/24
Project No:	23-390
Scale:	1/4" = 1'-0"
Drawn By:	HARGREAVES
Checked By:	HARGREAVES

PHASE IV (Final CD)

Sheet Title:

DOOR SCHEDULES 111 thru 130

Sheet Number:

A602

Autodesk Docs://23-390 IHS IHouse Apt v2023/23-390 06 Arch IHouse Apt 2023.rvt
8/13/2024 2:30:46 PM

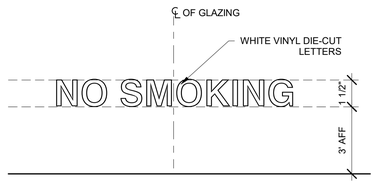

D SIGN TYPE D
3" = 1'-0"

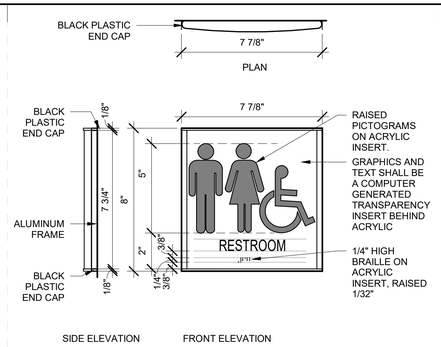

C SIGN TYPE C
3" = 1'-0"

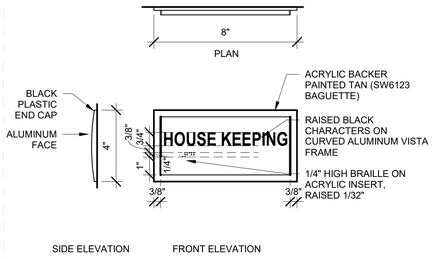

B SIGN TYPE B
3" = 1'-0"

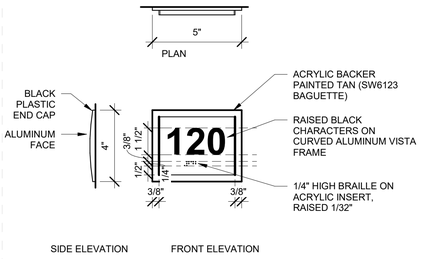

A SIGN TYPE A
3" = 1'-0"

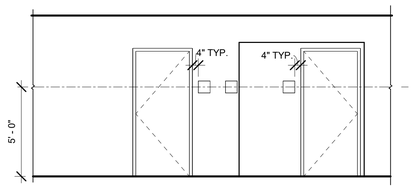

NOTE: WHEN SIGN CANNOT BE IMMEDIATELY ADJACENT TO DOOR FRAME, MOUNT ON SIDE WALL NEAR LEVER HANDLE. MOUNTING LOCATION SHALL BE SO THAT A PERSON MAY APPROACH WITHIN 3 INCHES OF SIGNAGE WITHOUT INCOUNTERING PROTRUDING OBJECTS OR STANDING WITHIN THE SWING OF A DOOR. SIGN INSTALLER TO SUBMIT SHOP DRAWINGS SHOWING ACTUAL SIGN INSTALLATION LOCATION.

Sign Mounting
1/4" = 1'-0"

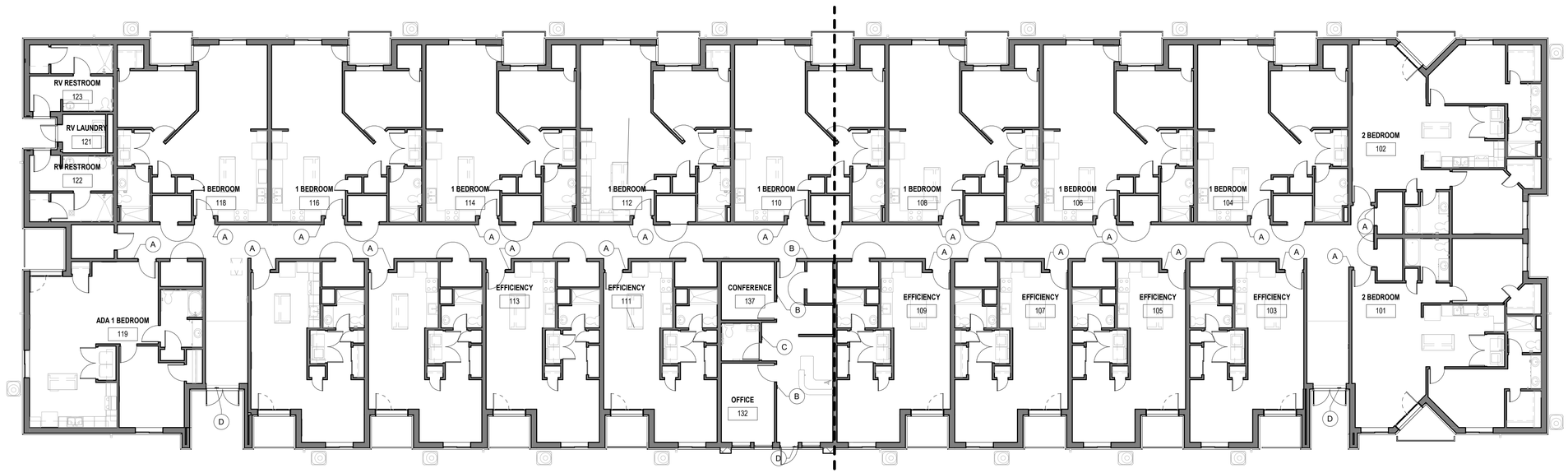

A1 SIGNAGE PLAN
3/32" = 1'-0"

SIGN SCHEDULE				
Room #	Room Name	Sign Type	Sign #	Sign Verbiage
101	2 BEDROOM	A	101	
102	2 BEDROOM	A	102	
103	EFFICIENCY	A	103	
104	1 BEDROOM	A	104	
105	EFFICIENCY	A	105	
106	1 BEDROOM	A	106	
107	EFFICIENCY	A	107	
108	1 BEDROOM	A	108	
109	EFFICIENCY	A	109	
110	1 BEDROOM	A	110	
111	EFFICIENCY	A	111	
112	1 BEDROOM	A	112	
113	EFFICIENCY	A	113	
114	1 BEDROOM	A	114	
115	EFFICIENCY	A	115	
116	1 BEDROOM	A	116	
117	EFFICENCY	A	117	
118	1 BEDROOM	A	118	
119	ADA 1 BEDROOM	A	119	
121	RV LAUNDRY	B		LAUNDRY
122	RV RESTROOM	C		MEN'S SHOWER/RESTROOM
123	RV RESTROOM	C		WOMEN'S SHOWER/RESTROOM
132	OFFICE	B		OFFICE
134	STAFF RR	C		
137	CONFERENCE	B		CONFERENCE

JSRa
JOHNSON SMITTHIPONG & ROSAMOND ASSOCIATES, INC.
5210 E Williams Cir • Ste 600 • Tucson, AZ 85711
(520) 547-7904 • www.jsra.com

Consultants:

ISSUED FOR INTERIM REVIEW
THIS DOCUMENT IS NOT TO BE USED FOR REGULATORY APPROVAL, PERMIT, OR CONSTRUCTION
Vernon Rosamond
Arizona Lic #: 9793
Date: 8/13/24

iHOUSE APARTMENT

Tonalea, AZ 86044

U. S. DEPARTMENT OF HEALTH AND HUMAN SERVICES
INDIAN HEALTH SERVICE
NAVAJO AREA OFFICE

No.	Date	Description

Issue Date:	8/13/24
Project No:	23-390
Scale:	As indicated
Drawn By:	HARGREAVES
Checked By:	HARGREAVES

PHASE IV (Final CD)

Sheet Title:

SIGNAGE SCHEDULE

Sheet Number:

A603

Autodesk Docs://23-390 IHS iHouse Apt v2023/23-390 06 Arch iHouse Apt 2023.rvt
8/13/2024 2:30:47 PM

ROOM FINISH SCHEDULE - OFFICE SUITE

No.	Room Name	Floor Finish	Base Finish	Wall Finish North	Wall Finish East	Wall Finish South	Wall Finish West	Clg Finish	Remarks
131	LOBBY	LVT-1	RB-1	P-1	P-2	P-1	P-1	P-4	
132	OFFICE	LVT-1	RB-1	P-1	P-1	P-1	P-2	P-4	
133	RECEPTION	LVT-1	RB-1	P-1	P-2	P-1	P-1	P-4	
134	STAFF RR	T-1	T-1	T-1	T-1	T-1	T-1	P-4	
136	WORK CTR	LVT-1	RB-1	P-1	P-1	P-1	P-1	P-4	
137	CONFERENCE	LVT-1	RB-1	P-1	P-1	P-1	P-2	P-4	
138	STAFF SERVICES	LVT-1	RB-1	P-1	P-1	P-1	P-1	P-4	
139	MECH	SC1	RB-1	P-1	P-1	P-1	P-1	P-4	

ROOM FINISH SCHEDULE - RV RESTROOMS

No.	Room Name	Floor Finish	Base Finish	Wall Finish North	Wall Finish East	Wall Finish South	Wall Finish West	Clg Finish	Remarks
120	MECHANICAL	SC1	RB-1	P-1	P-1	P-1	P-1	P-4	
121	RV LAUNDRY	T-1	RB-1	P-1	P-1	P-1	P-1	P-4	
122	RV RESTROOM	T-1	T-1	T-1	T-1	T-1	T-1	P-4	
122.1	SHOWER	T-3	T-1	T-1	T-1	T-1	T-1	P-4	
122.2	CLOSET	T-1	RB-1	P-1	P-1	P-1	P-1	P-4	
123	RV RESTROOM	T-1	T-1	T-1	T-1	T-1	T-1	P-4	
123.1	SHOWER	T-3	T-1	T-1	T-1	T-1	T-1	P-4	
123.2	CLOSET	T-1	RB-1	P-1	P-1	P-1	P-1	P-4	

MATERIAL SCHEDULE

REF	DESCRIPTION	MANUFACTURER
BASE		
RB1	RUBBER BASE	ROPPE
T-1	TILE BASE	DALTILE - NOIR LINEN-FABRIQUE - CREME LINEN (P686) (6X24)
WD1	WOOD BASE (P-3)	
FLOOR		
LVT-1	LUXURY VINYL TILE - COLOR ONE	KARNDEAN - CASHMERE OAK (LLP353) (59.06X9.84)
LVT-2	LUXURY VINYL TILE - COLOR TWO	
SC1	SEALED CONCRETE	
T-1	PORCELAIN FLOOR/WALL TILE - COLOR ONE	DALTILE - NOIR LINEN-FABRIQUE - CREME LINEN (P686) (6X24)
T-2	PORCELAIN FLOOR/WALL TILE - COLOR TWO	DALTILE - NOIR LINEN-FABRIQUE - GRIS LINEN (P690) (6X24)
T-3	PORCELAIN SHOWER FLOOR TILE - COLOR THREE	DALTILE - NOIR LINEN-FABRIQUE - GRIS LINEN (P690) (2X2)
WALL		
P-1	FIELD PAINT	DUNN EDWARDS - DEW381 DROPLETS
P-2	ACCENT PAINT	DUNN EDWARDS - DEC715 SANDAL
P-3	TRIM PAINT	DUNN EDWARDS - DE6096 HOMESTEAD
P-4	CEILING PAINT	DUNN EDWARDS - DEW381 DROPLETS
T-1	PORCELAIN FLOOR/WALL TILE	DALTILE - NOIR LINEN-FABRIQUE - CREME LINEN (P686) (6X24)
CEILING		
GB1	GYPSUM BOARD CEILING (P-4)	
MISC		
GROUT	CUSTOM BUILDING PRODUCTS	
HPL-1	PLASTIC LAMINATE (FACE)	WILSON AR7 - PINNACLE WALNUT 7992-38
QTZ-1	QUARTZ	WILSON AR7 - DESERT WIND Q4031
SS1	SOLID SURFACE	CORIAN - WILLOW
T-4	CERAMIC BACKSPLASH TILE	DALTILE - COLOR WHEEL CLASSIC - WHITE 0100 (1) (3X6)

ROOM FINISH SCHEDULE - EFFICIENCY

No.	Room Name	Floor Finish	Base Finish	Wall Finish North	Wall Finish East	Wall Finish South	Wall Finish West	Clg Finish	Remarks
117	EFFICENCY	LVT-1	RB-1	P-1	P-1	P-1	P-1	P-4	
117.1	LIVING	LVT-1	RB-1	P-1	P-3	P-1	P-2	P-4	
117.2	KITCHEN	LVT-1	RB-1	P-1	P-3	P-3	P-1	P-4	
117.3	BEDROOM	LVT-1	RB-1	P-1	P-2	P-1	P-1	P-4	
117.4	CLOSET	LVT-1	RB-1	P-1	P-1	P-1	P-1	P-4	
117.5	UTILITY	LVT-1	RB-1	P-1	P-1	P-1	P-1	P-4	
117.6	CLOSET	LVT-1	RB-1	P-1	P-1	P-1	P-1	P-4	
117.7	CLOSET	LVT-1	RB-1	P-1	P-1	P-1	P-1	P-4	
117.8	BATHROOM	LVT-1	RB-1	P-1	P-1	P-1	P-1	P-4	
117.9	MECHANICAL	SC1	RB-1	P-1	P-1	P-1	P-1	P-4	

ROOM FINISH SCHEDULE - 1 BEDROOM

No.	Room Name	Floor Finish	Base Finish	Wall Finish North	Wall Finish East	Wall Finish South	Wall Finish West	Clg Finish	Remarks
112	1 BEDROOM	LVT-1	RB-1	P-1	P-1	P-1	P-1	P-4	
112.1	LIVING	LVT-1	RB-1	P-1	P-3	P-1	P-2	P-4	
112.2	DINING	LVT-1	RB-1	P-3	P-1	P-1	P-1	P-4	
112.3	KITCHEN	LVT-1	RB-1	P-1	P-1	P-3	P-2	P-4	
112.4	CLOSET	LVT-1	RB-1	P-1	P-1	P-1	P-1	P-4	
112.5	CLOSET	LVT-1	RB-1	P-1	P-1	P-1	P-1	P-4	
112.6	MECHANICAL	SC1	RB-1	P-1	P-1	P-1	P-1	P-4	
112.7	BATHROOM	LVT-1	RB-1	P-1	P-1	P-1	P-1	P-4	
112.8	UTILITY	LVT-1	RB-1	P-1	P-1	P-1	P-1	P-4	
112.9	HALLWAY	LVT-1	RB-1	P-1	P-1	P-1	P-1	P-4	
112.10	BEDROOM	LVT-1	RB-1	P-1	P-2	P-1	P-1	P-4	
112.11	CLOSET	LVT-1	RB-1	P-1	P-1	P-1	P-1	P-4	

ROOM FINISH SCHEDULE - 2 BEDROOM

No.	Room Name	Floor Finish	Base Finish	Wall Finish North	Wall Finish East	Wall Finish South	Wall Finish West	Clg Finish	Remarks
102	2 BEDROOM	LVT-1	RB-1	P-1	P-1	P-1	P-1	P-4	
102.1	DINING	LVT-1	RB-1	P-1	P-1	P-1	P-3	P-4	
102.2	LIVING ROOM	LVT-1	RB-1	P-1	P-1	P-1	P-3	P-4	
102.3	KITCHEN	LVT-1	RB-1	P-1	P-1	P-3	P-1	P-4	
102.4	UTILITY ROOM	LVT-1	RB-1	P-1	P-1	P-1	P-1	P-4	
102.5	BEDROOM 1	LVT-1	RB-1	P-1	P-1	P-2	P-1	P-4	
102.6	CLOSET	LVT-1	RB-1	P-1	P-1	P-1	P-1	P-4	
102.7	LAVATORY	LVT-1	RB-1	P-1	P-1	P-1	P-1	P-4	
102.8	BATHROOM	LVT-1	RB-1	P-1	P-1	P-1	P-1	P-4	
102.9	CLOSET 2	LVT-1	RB-1	P-1	P-1	P-1	P-1	P-4	
102.10	BEDROOM 2	LVT-1	RB-1	P-1	P-1	P-2	P-1	P-4	
102.11	BATHROOM	LVT-1	RB-1	P-1	P-1	P-1	P-1	P-4	
102.12	CLOSET	LVT-1	RB-1	P-1	P-1	P-1	P-1	P-4	
102.13	MECHANICAL	SC1	RB-1	P-1	P-1	P-1	P-1	P-4	

ROOM FINISH SCHEDULE - 1 BEDROOM ADA

No.	Room Name	Floor Finish	Base Finish	Wall Finish North	Wall Finish East	Wall Finish South	Wall Finish West	Clg Finish	Remarks
119	ADA 1 BEDROOM	LVT-1	RB-1	P-1	P-1	P-1	P-1	P-4	
119.1	DINING	LVT-1	RB-1	P-1	P-1	P-1	P-2	P-4	
119.2	KITCHEN	LVT-1	RB-1	P-1	P-1	P-3	P-2	P-4	
119.3	UTILITY	LVT-1	RB-1	P-1	P-1	P-1	P-1	P-4	
119.4	CLOSET	LVT-1	RB-1	P-1	P-1	P-1	P-1	P-4	
119.5	LIVING	LVT-1	RB-1	P-1	P-3	P-1	P-1	P-4	
119.6	BEDROOM	LVT-1	RB-1	P-1	P-2	P-1	P-1	P-4	
119.7	CLOSET	LVT-1	RB-1	P-1	P-1	P-1	P-1	P-4	
119.8	CLOSET	LVT-1	RB-1	P-1	P-1	P-1	P-1	P-4	
119.9	BATHROOM	LVT-1	RB-1	P-1	P-1	P-1	P-1	P-4	
119.10	MECHANICAL	SC1	RB-1	P-1	P-1	P-1	P-1	P-4	

JSRa
JOHNSON SMITTHIPONG & ROSAMOND ASSOCIATES, INC.
5210 E Williams Cir • Ste 600 • Tucson, AZ 85711
(520) 547-7904 • www.jsra.com

Consultants:

ISSUED FOR INTERIM REVIEW

THIS DOCUMENT IS NOT TO BE USED FOR REGULATORY APPROVAL, PERMIT, OR CONSTRUCTION

Vernon Rosamond
Arizona Lic #: 9793
Date: 8/13/24

iHOUSE APARTMENT

Tonalea, AZ 86044

U. S. DEPARTMENT OF HEALTH AND HUMAN SERVICES
INDIAN HEALTH SERVICE
NAVAJO AREA OFFICE

No.	Date	Description

Issue Date: 8/13/24
Project No: 23-390
Scale:
Drawn By: BARBOZA
Checked By: HARGREAVES

PHASE IV (Final CD)

Sheet Title:

ROOM SCHEDULE

Sheet Number:

A611

Autodesk Docs://23-390 IHS IHouse Apt v2023/23-390 06 Arch IHouse Apt 2023.rvt
8/13/2024 2:30:48 PM



C1 OVERALL FLOOR PLAN
1/8" = 1'-0"



A2 OVERALL FLOOR PLAN
1/8" = 1'-0"

JSRa
JOHNSON SMITTHIPONG & ROSAMOND ASSOCIATES, INC.
5210 E Williams Cir • Ste 600 • Tucson, AZ 85711
(520) 547-7904 • www.jsra.com

Consultants:

ISSUED FOR INTERIM REVIEW
THIS DOCUMENT IS NOT TO BE USED FOR REGULATORY APPROVAL, PERMIT, OR CONSTRUCTION
Vernon Rosamond
Arizona Lic #: 9793
Date: 8/13/24

iHOUSE APARTMENT

Tonalea, AZ 86044

U. S. DEPARTMENT OF HEALTH AND HUMAN SERVICES
INDIAN HEALTH SERVICE
NAVAJO AREA OFFICE

No.	Date	Description

Issue Date:	8/13/24
Project No:	23-390
Scale:	1/8" = 1'-0"
Drawn By:	Author
Checked By:	Checker

PHASE IV (Final CD)

Sheet Title:

FLOOR FINISH PLAN

Sheet Number:

A612

Autodesk Docs://23-390 IHS iHouse Apt v2023/23-390 06 Arch iHouse Apt 2023.rvt
8/13/2024 2:30:51 PM

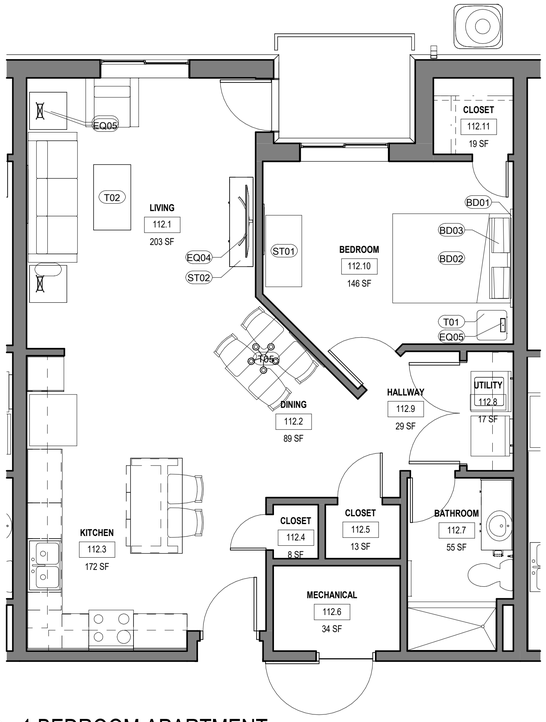

C1 1 BEDROOM APARTMENT
1/4" = 1'-0"

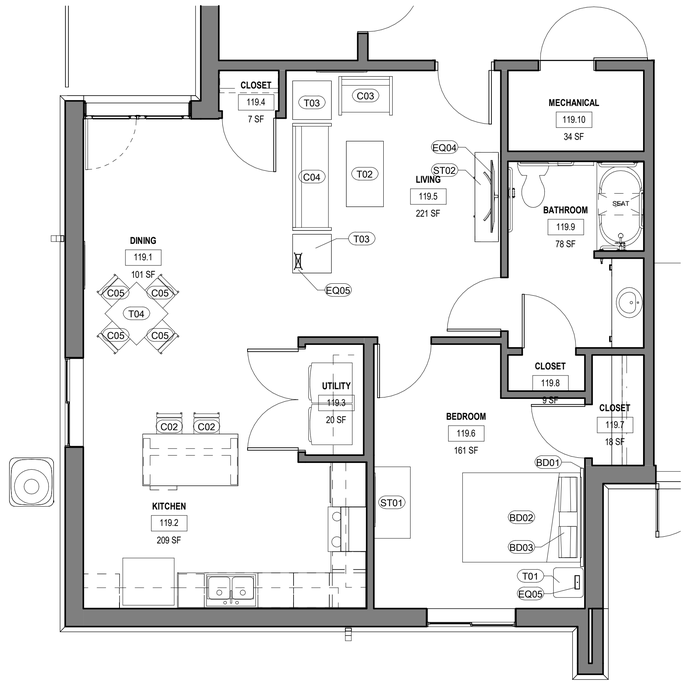

C2 ACCESSIBLE 1 BEDROOM APARTMENT
1/4" = 1'-0"

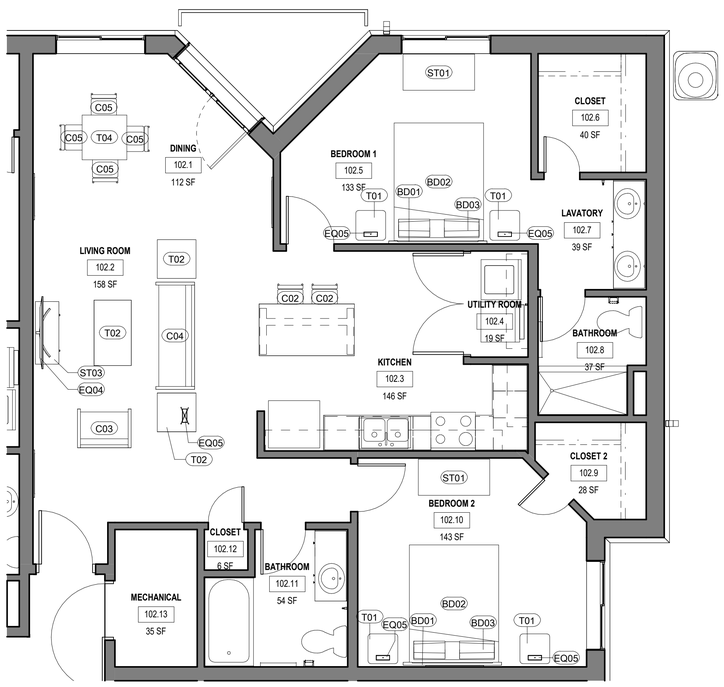

A1 2 BEDROOM APARTMENT
1/4" = 1'-0"

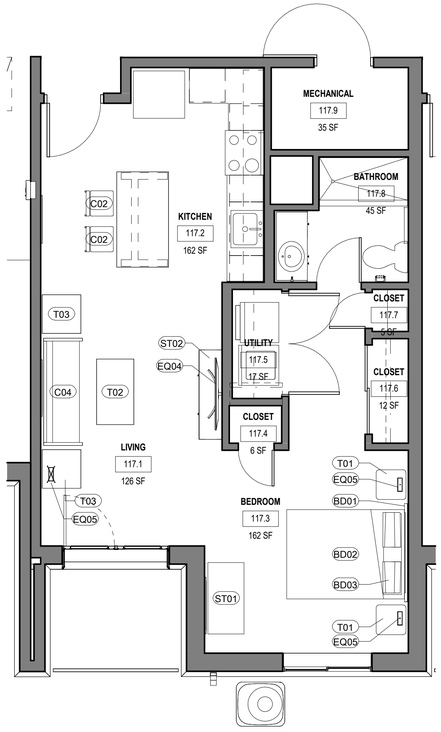

A2 EFFICIENCY APARTMENT
1/4" = 1'-0"

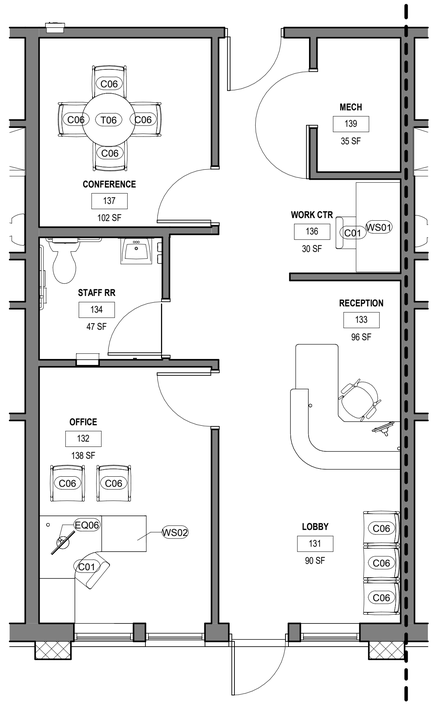

A3 STAFF OFFICE
1/4" = 1'-0"

FURNITURE SCHEDULE

Type Mark	Description
	<varies>
BD01	Queen Headboard & Frame
BD02	Queen Mattress
BD03	Queen Size Pillow
C01	Task Chair
C02	Midsize Stool, Armless
C03	<varies>
C04	<varies>
C05	Midsize Four Point, Armless Chair
C06	<varies>
EQ04	50" LED Smart Television
EQ05	Table Lamp - Bedroom
EQ06	24" LED Flatscreen Monitor
ST01	Dresser
ST02	Entertainment Unit - 61"
ST03	Entertainment Unit - 42"
T01	Nightstand
T02	Coffee Table
T03	End Table
T04	Square Dining Table
T05	Rectangular Dining Table
T06	Round Conference Table
WS01	Desk
WS02	Workstation

JSRa
JOHNSON SMITTHIPONG & ROSAMOND ASSOCIATES, INC.
5210 E Williams Cir • Ste 600 • Tucson, AZ 85711
(520) 547-7904 • www.jsra.com

Consultants:

ISSUED FOR INTERIM REVIEW
THIS DOCUMENT IS NOT TO BE USED FOR REGULATORY APPROVAL, PERMIT, OR CONSTRUCTION
Vernon Rosamond
Arizona Lic #: 9793
Date: 8/13/24

iHOUSE APARTMENT

Tonalea, AZ 86044

U. S. DEPARTMENT OF HEALTH AND HUMAN SERVICES
INDIAN HEALTH SERVICE
NAVAJO AREA OFFICE

No.	Date	Description

Issue Date:	8/13/24
Project No:	23-390
Scale:	1/4" = 1'-0"
Drawn By:	KADDOURA
Checked By:	HARGREAVES

PHASE IV (Final CD)

Sheet Title:

FURNITURE PLAN

Sheet Number:

A701

Autodesk Docs://23-390 IHS iHouse Apt v2023/23-390 06 Arch iHouse Apt 2023.rvt
8/13/2024 2:30:53 PM

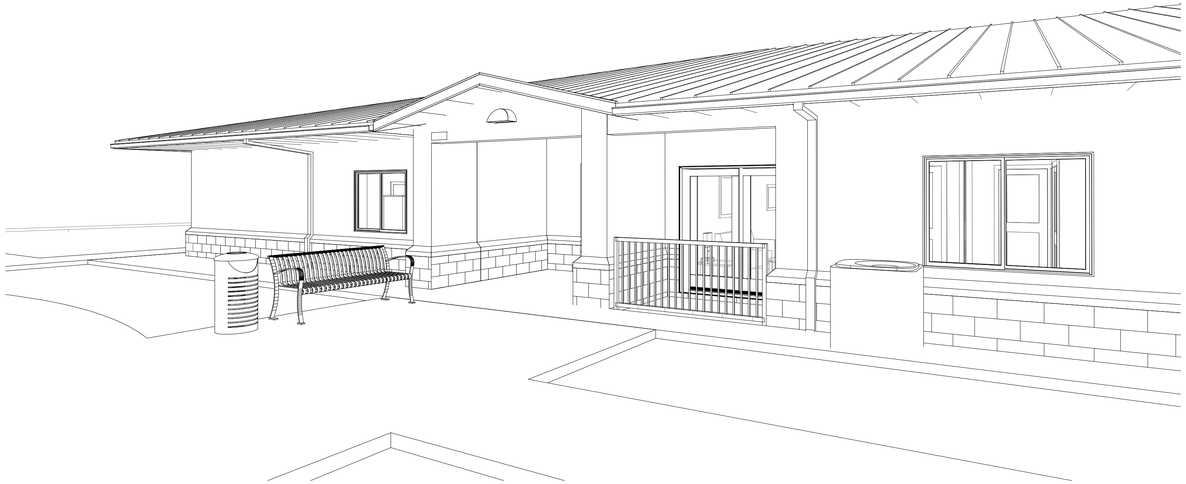

C1 WEST ENTRY

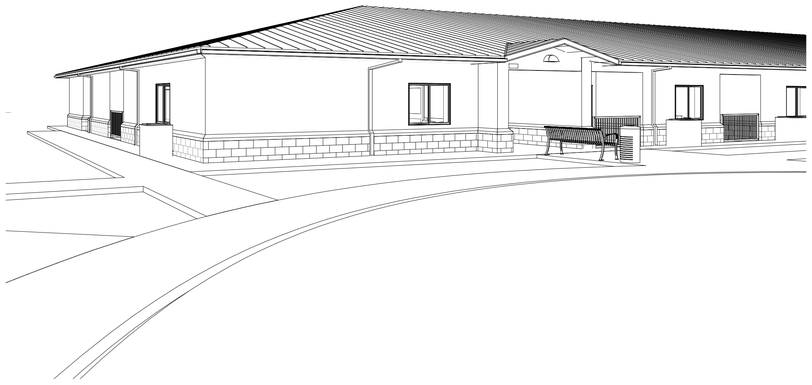

C4 RV BATHROOM ENTRY

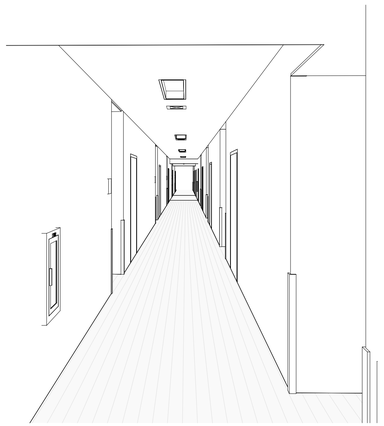

B1 PUBLIC COORIDOR

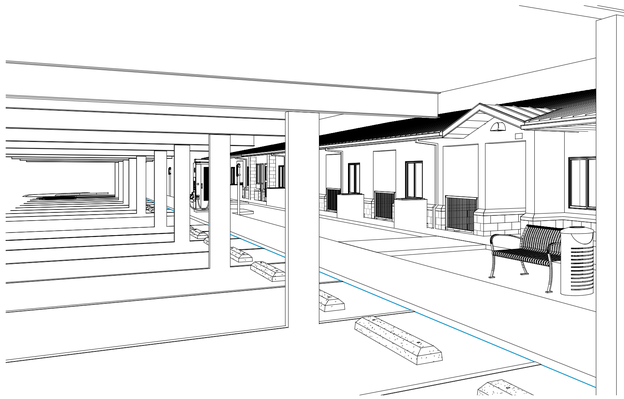

B3 VIEW FROM PARKING

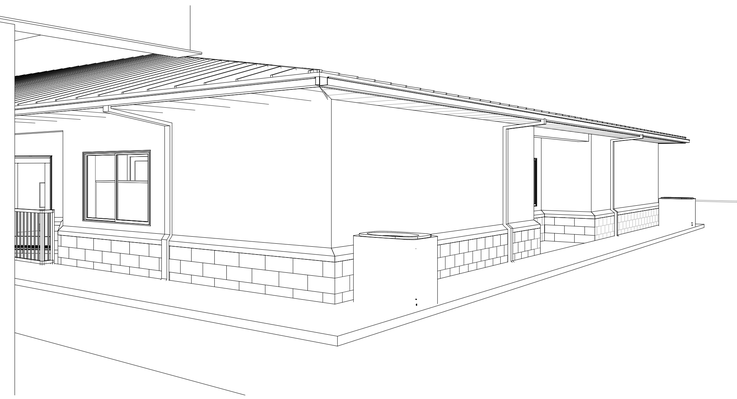

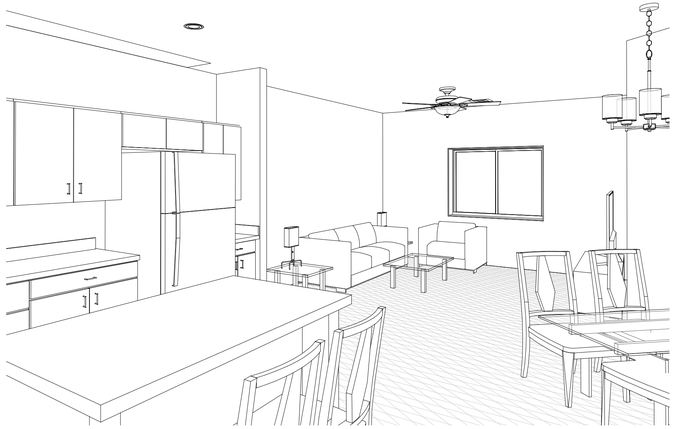

A1 1 BEDROOM - VIEW FROM KITCHEN



A3 1 BEDROOM - VIEW FROM LIVING ROOM

JSRa
JOHNSON SMITTHIPONG & ROSAMOND ASSOCIATES, INC.
5210 E Williams Cir • Ste 600 • Tucson, AZ 85711
(520) 547-7904 • www.jsra.com

Consultants:

ISSUED FOR INTERIM REVIEW

THIS DOCUMENT IS NOT TO BE USED FOR REGULATORY APPROVAL, PERMIT, OR CONSTRUCTION

Vernon Rosamond
Arizona Lic #: 9793
Date: 8/13/24

iHOUSE APARTMENT

Tonalea, AZ 86044

U. S. DEPARTMENT OF HEALTH AND HUMAN SERVICES
INDIAN HEALTH SERVICE
NAVAJO AREA OFFICE

No.	Date	Description

Issue Date:	8/13/24
Project No:	23-390
Scale:	
Drawn By:	KADDOURA
Checked By:	HARGREAVES

PHASE IV (Final CD)

Sheet Title:

PERSPECTIVE VIEWS

Sheet Number:

A801

Autodesk Docs://23-390 IHS iHouse Apt \2023\23-390 06 Arch iHouse Apt 2023.rvt
8/13/2024 2:30:56 PM

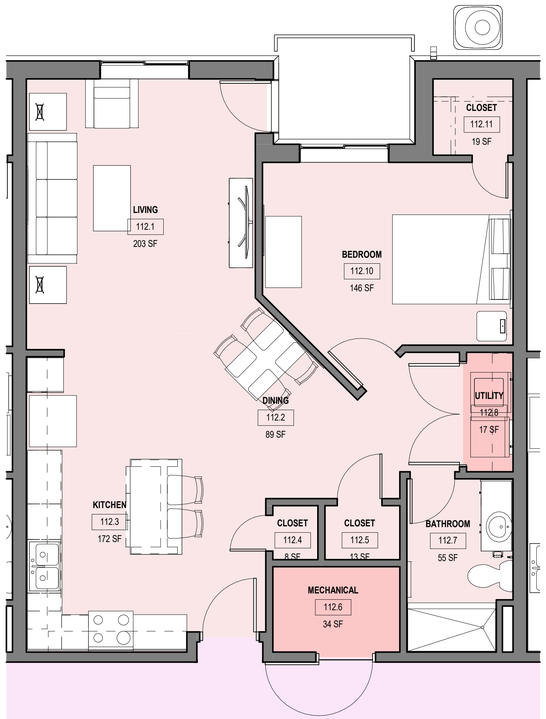

C1 1 BEDROOM
1/4" = 1'-0"



C2 1 BEDROOM ADA
1/4" = 1'-0"

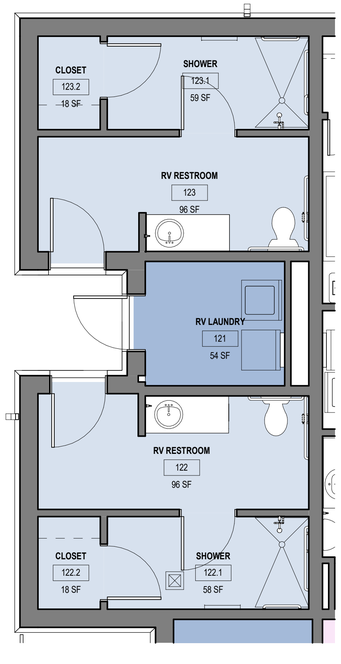

C3 FLOOR PLAN - PUBLIC BATHROOM
1/4" = 1'-0"

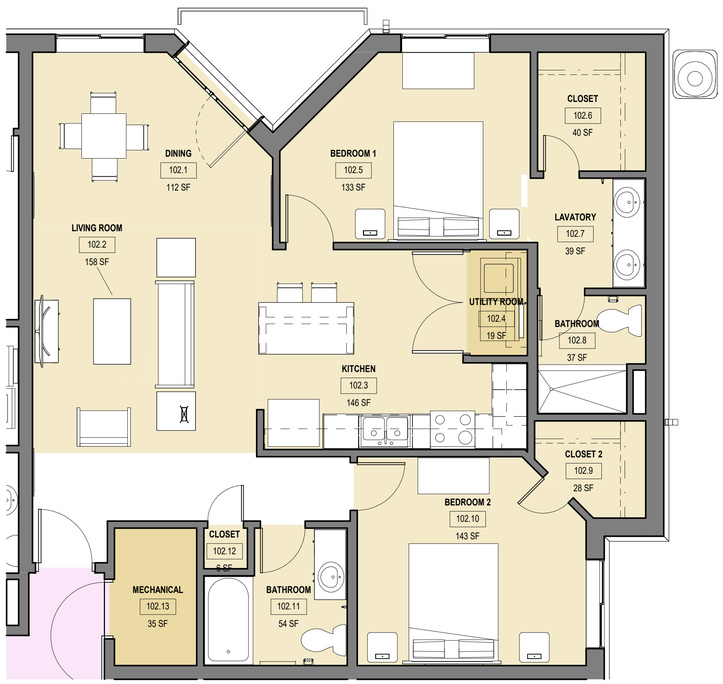

A1 2 BEDROOM
1/4" = 1'-0"

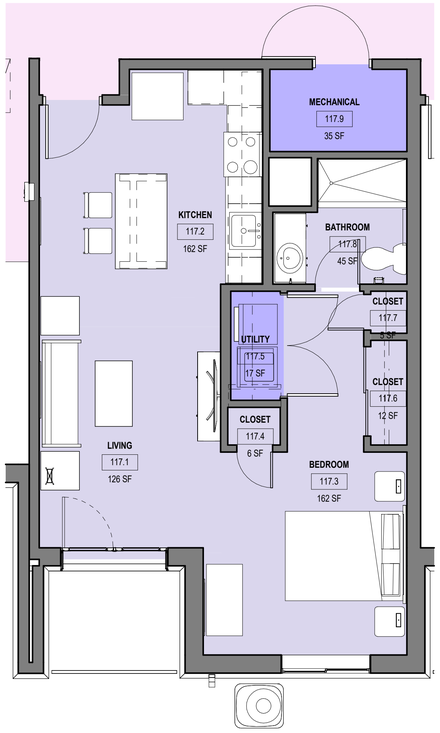

A2 EFFICIENCY
1/4" = 1'-0"

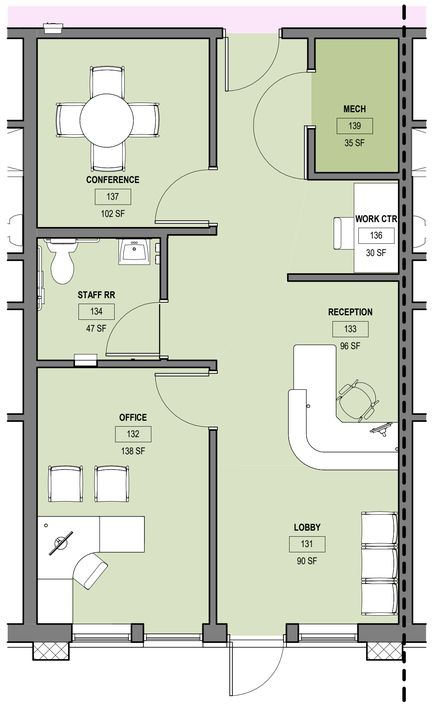

A3 STAFF SUPPORT
1/4" = 1'-0"

SPACE PROGRAM

Unit Type	Min Target Area	Max Target Area	Actual Area
1-Bedroom	730 SF	810 SF	734 SF
1-Bedroom ADA	800 SF	890 SF	805 SF
2-Bedroom	1,000 SF	1,250 SF	976 SF
Efficiency	550 SF	730 SF	519 SF

1 BEDROOM SPACE PROGRAM

Number	Name	Net Area
1 Bedroom Living Area		
112.1	LIVING	203 SF
112.2	DINING	89 SF
112.3	KITCHEN	172 SF
112.4	CLOSET	8 SF
112.5	CLOSET	13 SF
112.7	BATHROOM	55 SF
112.9	HALLWAY	29 SF
112.10	BEDROOM	146 SF
112.11	CLOSET	19 SF
		733 SF
1 Bedroom Non-Living Area		
112.6	MECHANICAL	34 SF
112.8	UTILITY	17 SF
		51 SF
		785 SF

1 BEDROOM ADA SPACE PROGRAM

Number	Name	Net Area
1 Bedroom ADA Living Area		
119.1	DINING	101 SF
119.2	KITCHEN	209 SF
119.4	CLOSET	7 SF
119.5	LIVING	221 SF
119.6	BEDROOM	161 SF
119.7	CLOSET	18 SF
119.8	CLOSET	9 SF
119.9	BATHROOM	78 SF
		802 SF
1 Bedroom ADA Non-Living Area		
119.3	UTILITY	20 SF
119.10	MECHANICAL	34 SF
		55 SF
		857 SF

2 BEDROOM SPACE PROGRAM

Number	Name	Net Area
2 Bedroom Living Area		
102.1	DINING	112 SF
102.2	LIVING ROOM	158 SF
102.3	KITCHEN	146 SF
102.5	BEDROOM 1	133 SF
102.6	CLOSET	40 SF
102.7	LAVATORY	39 SF
102.8	BATHROOM	37 SF
102.9	CLOSET 2	28 SF
102.10	BEDROOM 2	143 SF
102.11	BATHROOM	54 SF
102.12	CLOSET	6 SF
		898 SF
2 Bedroom Non-Living Area		
102.4	UTILITY ROOM	19 SF
102.13	MECHANICAL	35 SF
		54 SF
		952 SF

EFFICIENCY SPACE PROGRAM

Number	Name	Net Area
Efficiency Living Area		
117.1	LIVING	126 SF
117.2	KITCHEN	162 SF
117.3	BEDROOM	162 SF
117.4	CLOSET	6 SF
117.6	CLOSET	12 SF
117.7	CLOSET	5 SF
117.8	BATHROOM	45 SF
		519 SF
Efficiency Non-Living Area		
117.5	UTILITY	17 SF
117.9	MECHANICAL	35 SF
		52 SF
		571 SF

JSRa
JOHNSON SMITTHIPONG & ROSAMOND ASSOCIATES, INC.
5210 E Williams Cir • Ste 600 • Tucson, AZ 85711
(520) 547-7904 • www.jsra.com

Consultants:

ISSUED FOR INTERIM REVIEW
THIS DOCUMENT IS NOT TO BE USED FOR REGULATORY APPROVAL, PERMIT, OR CONSTRUCTION
Vernon Rosamond
Arizona Lic #: 9793
Date: 8/13/24

iHOUSE APARTMENT

Tonalea, AZ 86044

U. S. DEPARTMENT OF HEALTH AND HUMAN SERVICES
INDIAN HEALTH SERVICE
NAVAJO AREA OFFICE

No.	Date	Description

Issue Date:	8/13/24
Project No:	23-390
Scale:	1/4" = 1'-0"
Drawn By:	KADDOURA
Checked By:	HARGREAVES

PHASE IV (Final CD)

Sheet Title:

SPACE PROGRAM FLOOR PLANS

Sheet Number:

A901

Autodesk Docs://23-390 IHS iHouse Apt v2023/23-390_06 Arch iHouse Apt 2023.rvt
8/13/2024 2:30:59 PM

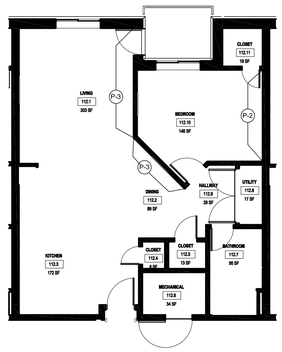

1 1 BEDROOM PAINT PLAN
1/8" = 1'-0"

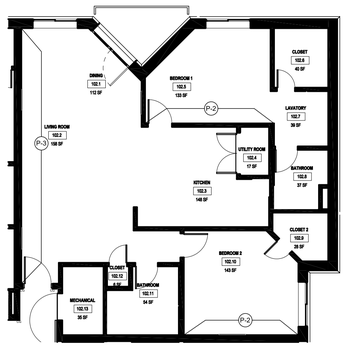

2 2 BEDROOM PAINT PLAN
1/8" = 1'-0"

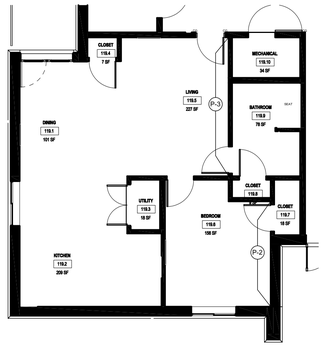

3 ACCESSIBLE 1 BEDROOM PAINT PLAN
1/8" = 1'-0"

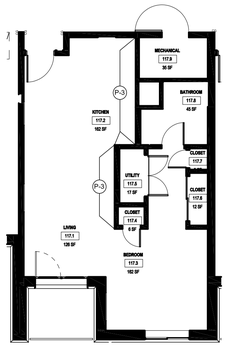

4 EFFICIENCY PAINT PLAN
1/8" = 1'-0"

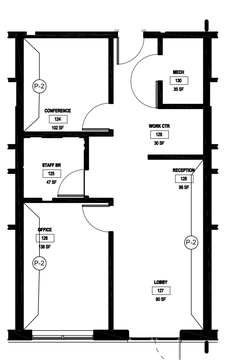

5 STAFF OFFICE PAINT PLAN
1/8" = 1'-0"

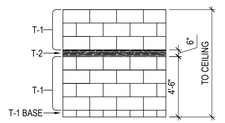

6 ELEVATION- TYPICAL WALL TILE PATTERN IN OFFICE & RV RESTROOMS
3/16" = 1'-0"

ROOM FINISH SCHEDULE

GROUT:	CUSTOM BUILDING PRODUCTS / TBD
QTZ-1	KITCHEN COUNTERS- QUARTZ: WILSONART / DESERT WIND Q4031
HPL-1	CABINETS- HIGH PRESSURE LAMINATE: WILSONART / PINNACLE WALNUT 7992-38
P-1	FIELD PAINT: DUNN EDWARDS / DEW381 DROPLETS FINISH: EGGSHELL
P-2	ACCENT PAINT: DUNN EDWARDS / DEC715 SANDAL FINISH: EGGSHELL
P-3	ACCENT PAINT: DUNN EDWARDS / DE6096 HOMESTEAD FINISH: EGGSHELL
P-4	CEILING PAINT: DUNN EDWARDS / DEW381 DROPLETS FINISH: FLAT
RB-1	RUBBER BASE: ROPPE / TBD
SS-1	BATHROOMS- SOLID SURFACE: CORIAN / WILLOW
T-1	PORCELAIN FLOOR/WALL TILE: DALTILE PATTERN/COLOR: NOIR LINEN-FABRIQUE / CREME LINEN P686 GROUT COLOR: TBD INSTALLATION: BRICK OFFSET SIZE: 12X24
T-2	PORCELAIN FLOOR/WALL TILE: DALTILE PATTERN/COLOR: NOIR LINEN-FABRIQUE / GRIS LINEN P690 GROUT COLOR: TBD INSTALLATION: BRICK SIZE: 6X24
T-3	PORCELAIN SHOWER FLOOR TILE: DALTILE PATTERN/COLOR: NOIR LINEN-FABRIQUE / GRIS LINEN P690 GROUT COLOR: TBD INSTALLATION: BRICK SIZE: 2X2
T-4	CERAMIC BACKSPLASH TILE: DALTILE PATTERN/COLOR: COLOR WHEEL CLASSIC / WHITE 0100 (1) GROUT COLOR: TBD INSTALLATION: OFFSET HORIZONTAL SIZE: 3X6
LVT-1	LUXURY VINYL TILE: KARNDEAN PATTERN: LOOSELAY COLOR/SIZE: CASHMERE OAK LLP353 / 59.06" X 9.84" INSTALLATION: STAGGER
LVT-2	LUXURY VINYL TILE: KARNDEAN PATTERN: LOOSELAY COLOR/SIZE: ARIZONA LLT200 / 59.06" X 9.84" INSTALLATION: STAGGER

FINISH SYMBOL LEGEND

(XX) = ACCENT WALL FINISH

* ALL WALLS TO BE P-1 UNLESS OTHERWISE NOTED
* ALL CEILINGS TO BE P-4

JSRa
JOHNSON SMITTHIPONG & ROSAMOND ASSOCIATES, INC.
5210 E Williams Cir• Ste 600• Tucson, AZ 85711
(520) 547-7904 • www.jsrarchinc.com

Consultants:

AVIAR COMMERCIAL SPACE PLANNING & DESIGN

ISSUED FOR INTERIM REVIEW
THIS DOCUMENT IS NOT TO BE USED FOR REGULATORY APPROVAL, PERMIT, OR CONSTRUCTION
Vernon Rosamond
Arizona Lic #: 9793
Date:

iHOUSE
APARTMENT

U. S. DEPARTMENT OF HEALTH AND HUMAN SERVICES
INDIAN HEALTH SERVICE
NAVAJO AREA OFFICE

Issue Date: 8/13/24
Project No: 23-390
Scale: AS INDICATED
Drawn By: VICKERS
Checked By: ADAMS

PHASE IV (FINAL CD)

Sheet Title:

INTERIOR PAINT PLAN & FINISH SCHEDULE

Sheet Number:

I-101

GENERAL NOTES (NEW BUILD):

1. PROVIDE THE ENGINEER OF RECORD WITH A PRELIMINARY PUNCH LIST AND DRAWING PRIOR TO COMPLETION OF CONSTRUCTION. ALL ITEMS NOTED SHALL BE ADDRESSED BY THE CONTRACTOR PRIOR TO REQUESTING PUNCH LIST BY THE ENGINEER OF RECORD.
2. ALL PIPE, DEVICES, AND INSTALLATION SHALL FULLY COMPLY WITH NFPA 13 AND ALL REQUIRED AUTHORITIES HAVING JURISDICTION.
3. COMPLY WHOLLY WITH THE REQUIREMENT TO INSTALL ALL PIPING WITHIN CONCEALED SPACES PROVIDED.
4. REFER TO NOTES ON DRAWINGS AND SPECIFICATIONS FOR ADDITIONAL REQUIREMENTS. REFER TO STRUCTURAL AND ARCHITECTURAL DRAWINGS FOR BUILDING DETAILS.
5. PROVIDE A COMPLETE, HYDRAULICALLY CALCULATED, FULLY AUTOMATIC **WET** PIPE SPRINKLER SYSTEM THROUGHOUT THE BUILDING. INSTALL THE FIRE PROTECTION SYSTEM IN ACCORDANCE WITH ALL APPLICABLE NFPA STANDARDS, JOB SPECIFICATIONS, STATE CODE, AND LOCAL CODE.
6. FIRE PROTECTION SYSTEM(S), PIPING, VALVES AND APPURTENANCES INDICATED ON THE DRAWING ARE DIAGRAMMATIC IN THAT ALL REQUIRED DEVICES, PIPES, FITTINGS, AND OFFSETS MAY NOT BE SHOWN. VERIFY EQUIPMENT SELECTIONS, PIPE ROUTING, ETC. FOR CODE COMPLIANCE, COMPLIANCE, AND ARCHITECTURAL AND STRUCTURAL CONFORMITY. THOROUGHLY SURVEY THE PROPERTY AND REVIEW ARCHITECTURAL, STRUCTURAL, MECHANICAL, ELECTRICAL AND PLUMBING (M.E.P.) CONSTRUCTION DOCUMENTS PRIOR TO BID.
7. PROVIDE FIRE PROTECTION SHOP DRAWINGS WITH COMPLETE REFLECTED CEILING PLANS INDICATING LOCATION OF EACH SPRINKLER HEAD, AS WELL AS PIPING LAYOUTS, AND ROOM NAMES ON SHOP DRAWINGS. PROVIDE ADDITIONAL SPRINKLER HEADS (OVER CODE MINIMUM), IF REQUESTED BY THE ARCHITECT, TO OBTAIN SYMMETRICAL CEILING LAYOUTS.
8. FIRE PROTECTION SYSTEM SHALL BE COMPLETE WITH BACKFLOW PREVENTER, FIRE DEPARTMENT CONNECTION, CONTROL VALVES, SPRINKLER PIPING AND HEADS, ELECTRONIC SUPERVISION AND OTHER APPURTENANCES AS REQUIRED BY NFPA AND AUTHORITIES HAVING JURISDICTION.
9. CONDUCT A COORDINATION MEETING WITH THE SUBCONTRACTORS TO ESTABLISH CLEARANCE REQUIREMENTS NEEDED FOR M.E.P.F. WORK PRIOR TO FABRICATION OF THE SPRINKLER SYSTEM. ANY RELOCATION OF FIRE SPRINKLER SYSTEM REQUIRED FOR PROPER INSTALLATION OF M.E.P. SYSTEMS IS AT THE CONTRACTOR'S EXPENSE.
10. BASE BID ON CAREFUL COORDINATION OF ARCHITECTURAL COMPONENTS, MECHANICAL DUCT, MECHANICAL AND PLUMBING PIPING, ELECTRICAL, AND STRUCTURAL SYSTEMS IN THE BUILDING.
11. BASE HYDRAULIC CALCULATIONS ON A WATER FLOW TEST OBTAINED FROM THE CITY OF TONALEA. VERIFY FLOW TEST DATA WITH LOCAL AUTHORITIES. IF A CURRENT TEST IS NOT AVAILABLE, CONDUCT A PROPER FLOW TEST PRIOR TO PREPARATION OF SHOP DRAWINGS. PROVIDE A MINIMUM OF 10 PSI SAFETY FACTOR FOR ALL HYDRAULIC CALCULATIONS. PIPE SIZING INDICATED ON THE DRAWINGS IS FOR INFORMATIONAL PURPOSES ONLY. PIPE SIZING SHALL BE ESTABLISHED BY THE FIRE PROTECTION CONTRACTOR. NOTE: AVOID SYSTEM PRESSURES EXCEEDING 175 PSI.
12. PROVIDE A DOUBLE CHECK DETECTOR ASSEMBLY TO ISOLATE THE SPRINKLER SYSTEM FROM THE MAIN SUPPLY. COORDINATE REQUIREMENTS WITH THE CITY OF TONALEA AND THE STATE OF ARIZONA.
13. INTERFACE FIRE PROTECTION SYSTEM WITH THE BUILDING FIRE ALARM SYSTEM. REFER TO ELECTRICAL.
14. PROVIDE AND INSTALL ELECTRONIC SUPERVISION FOR ALL CONTROL VALVES.
15. PROVIDE SPECIAL CONSIDERATION TO AREAS THROUGHOUT THE BUILDING SUCH AS DROPPED SOFFITS, RAISED CEILINGS, FALSE BEAMS, AND LIGHTING SOFFITS THAT NECESSITATE ADDITIONAL SPRINKLER HEADS. REFER TO ARCHITECTURAL DRAWINGS FOR REFLECTED CEILING PLANS AND BUILDING DETAILS.
16. PROVIDE AND INSTALL QUICK RESPONSE SPRINKLERS FOR LIGHT HAZARD AND ORDINARY HAZARD AREAS, UNLESS NOTED OTHERWISE ON FIRE PROTECTION PLANS OR SPECIFICATIONS.
17. ALL CEILING MOUNTED SPRINKLER HEADS SHALL BE CHROME WITH CHROME RECESSED ESCUTCHEONS, UNLESS NOTED OTHERWISE ON FIRE PROTECTION PLANS OR SPECIFICATIONS. EXERCISE CAUTION AROUND CEILING MOUNTED DEVICES OR OPERABLE DOORS. INSTALL CONCEALED SPRINKLERS AS NEEDED TO ELIMINATE SPRINKLERS BEING AN OBSTRUCTION ISSUE WITH OTHER EQUIPMENT.
18. ALL WALL MOUNTED SPRINKLER HEADS SHALL BE CHROME WITH CHROME RECESSED ESCUTCHEONS, UNLESS NOTED OTHERWISE ON FIRE PROTECTION PLANS OR SPECIFICATIONS.
19. ALL SPRINKLER HEADS INSTALLED IN EXPOSED STRUCTURE SHALL BE BRASS UPRIGHT, UNLESS NOTED OTHERWISE ON FIRE PROTECTION PLANS OR SPECIFICATIONS.
20. PROVIDE AND INSTALL ALL CEILING MOUNTED SPRINKLER HEADS IN THE CENTER OF CEILING TILES.
21. PROVIDE SPRINKLER SYSTEM MAIN DRAIN IN ACCORDANCE WITH NFPA 13.
22. PROVIDE AUXILIARY DRAINS FOR ALL TRAPPED PIPING SECTIONS IN ACCORDANCE WITH NFPA 13.
23. TERMINATE ALL DRAIN PIPING AT THE EXTERIOR WITH 45 DEGREE ELBOW DOWN. INSTALL THE DRAIN IN A MANNER TO PREVENT FLOODING OR DAMAGE TO LANDSCAPING, AND TO PREVENT WETTING OF WALKWAYS. EXCEPTION: DRAIN PIPING MAY TERMINATE AT INTERIOR FLOOR DRAINS IF THE DRAIN HAS BEEN SIZED APPROPRIATELY. COORDINATE WITH PLUMBING CONTRACTOR FOR LOCATION OF FLOOR DRAIN.
24. INSTALL PIPING HORIZONTALLY AND AT RIGHT ANGLES TO WALLS AND CEILINGS.
25. ALL GROOVED PIPING SHALL BE BLACK SCHEDULE 10 OR BLACK SCHEDULE 40 WITH GROOVED AND WELDED OUTLETS. FITTINGS AND COUPLINGS SHALL BE STANDARD GROOVED.
26. ALL THREADED PIPING SHALL BE BLACK SCHEDULE 40. FITTINGS SHALL BE STANDARD "BLACK" GRADE.
27. ALL FIRE PROTECTION PIPING TO BE INSTALLED ABOVE CEILINGS.
28. DO NOT INSTALL ALTERNATIVE STEEL PIPE SCHEDULES ALLOWED BY NFPA 13.
29. DO NOT INSTALL CPVC PIPING.
30. PREPARE FOR PAINT ALL FIRE PROTECTION PIPING, FITTINGS, SUPPORTS AND ACCESSORIES IN EXPOSED AREAS. PAINT OSHA RED PIPING, FITTINGS, SUPPORTS AND ACCESSORIES IN MECHANICAL ROOMS.
31. PROVIDE PROTECTION FOR SPRINKLER HEADS IN AREAS WHERE THE CEILING AND SURROUNDING AREAS ARE TO BE PAINTED. REMOVE SPRINKLER PROTECTION AFTER PAINTING WORK IS COMPLETE. REPLACE, AT NO ADDITIONAL COST TO THE OWNER, ANY SPRINKLER HEAD WITH PAINT OR TEXTURE OVERSPRAY.
32. PROVIDE ACCESS PANELS WHERE NECESSARY TO ACCESS FIRE PROTECTION VALVES AND EQUIPMENT FOR TESTING, MAINTENANCE, INSPECTION OR DRAINAGE. ACCESS PANELS SHALL BE RATED TO MATCH THE WALL OR CEILING IN WHICH THEY ARE INSTALLED AND TO BE OF SUFFICIENT SIZE TO FACILITATE WORK, REPAIR OR REPLACEMENT OF CONTENT.
33. PROVIDE HEAD GUARDS ON ALL SPRINKLER HEADS AT OR BELOW AN ELEVATION OF 7'-0" AFF, OR THAT OTHERWISE MAY BE SUBJECT TO MECHANICAL DAMAGE, SUCH AS IN THE MECHANICAL ROOMS.
34. SEISMIC BRACING/ RESTRAINT IS NOT REQUIRED FOR THIS PROJECT.
35. FIRE PROTECTION PLANS SHALL BE SUBMITTED AND RECEIVE APPROVAL PRIOR TO FABRICATION BY ALL REQUIRED LOCAL AND STATE AUTHORITIES.

FIRE PROTECTION ADJUSTABLE PIPE STANDS

NFPA 13 REQUIRES THAT PIPE STANDS BE "APPROVED". AS SUCH, COMMERCIALLY MANUFACTURED, ADJUSTABLE PIPE STANDS WITH U-BOLTS HAVE BEEN SPECIFIED AND SHOWN HEREIN. UNDER NO CIRCUMSTANCES SHALL 'HOMEMADE', NON-APPROVED PIPE STANDS BE ACCEPTED OR TOLERATED. ADDITIONALLY, NFPA REQUIRES THE BUILDING TO SUPPORT THE FIRE PROTECTION SYSTEM(S) AND IT SHALL NOT BE PERMISSIBLE TO ALLOW UNDERGROUND LEAD-IN'S, SUCH AS FOR THE FIRE MAIN AND FDC LINES, TO BEAR THE LOAD OF THE HORIZONTAL BACKFLOW PREVENTION ASSEMBLY, MANIFOLD OR RISERS. AS A MINIMUM PROVIDE THE QUANTITY OF PIPE STANDS SHOWN IN THESE DETAILS.

***DESIGNER NOTES**
DELETE NOTE ABOUT FIRE PUMP IF NO PUMP IS REQUIRED.

DO NOT LEAVE DESIGNER NOTES ON PLANS!!

WATER FLOW TEST:

STATIC PRESSURE:	XXPSI
RESIDUAL PRESSURE:	XXPSI
MEASURED FLOW:	XXGPM
PERFORMED BY:	XXXXX
WITNESSED BY:	XXXXX
DATE:	XX/XX/XX
TIME:	XX:XX
LOCATION:	XXXXXX

NOTE: CONTRACTORS SHALL USE THIS WATER FLOW TEST FOR BID PURPOSES ONLY.

THE SUCCESSFUL BIDDER SHALL CONDUCT A NEW WATER FLOW TEST PRIOR TO DESIGN AND ORDERING OR THE FIRE PUMP, TO VERIFY THERE HAS BEEN NO SIGNIFICANT CHANGES IN THE WATER SUPPLY, AND SHALL PROVIDE RESULTS (DATE, TIME, WITNESSES, ETC.) OF THE NEW WATER FLOW TEST IN THE SUBMITTAL DOCUMENTS.

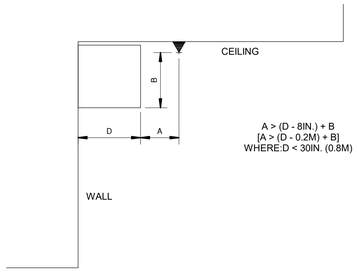

6 DETAIL OF OBSTRUCTIONS AGAINST WALLS
NOT TO SCALE

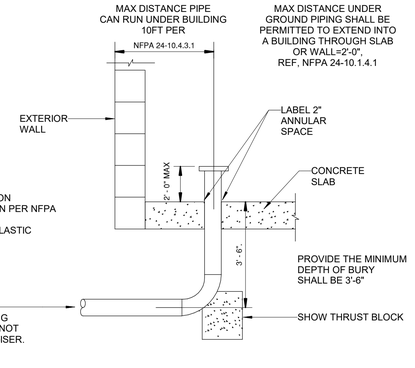

5 DETAIL OF FIRE SERVICE ENTRY W/ IN-BUILDING RISER
NOT TO SCALE

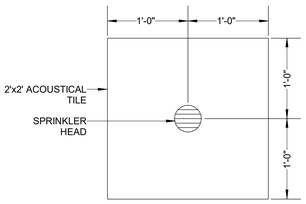

4 CENTER LINE OF TILE DETAIL
NOT TO SCALE

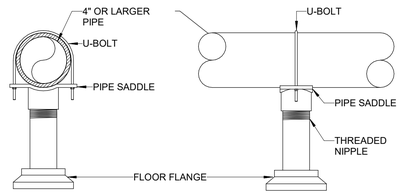

3 ADJUSTABLE PIPE STAND W/ U-BOLT DETAIL
NOT TO SCALE

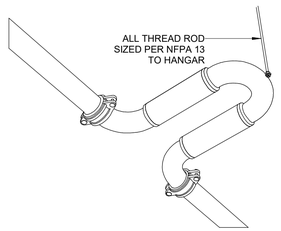

2 FLEX LOOP DETAIL
NOT TO SCALE

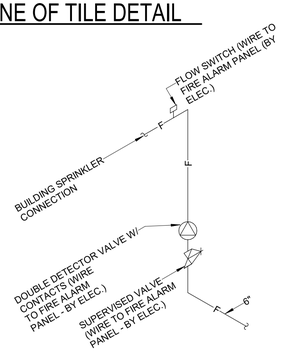

1 DETAIL OF ISOMETRIC FIRE SERVICE ENTRY
NOT TO SCALE

JSRa
JOHNSON SMITTHIPONG & ROSAMOND ASSOCIATES, INC.
5210 E Williams Cir • Ste 600 • Tucson, AZ 85711 •
(520) 547-7904 www.jsrarchinc.com

Consultants:

Bernhard TME Engineering
2990 N. Swan Road
Suite 227
Tucson, Arizona 85712
Phone: (520) 323-2381
tme@bernhardtme.com

ISSUED FOR INTERIM REVIEW
THIS DOCUMENT IS NOT TO BE USED FOR REGULATORY APPROVAL, PERMIT, OR CONSTRUCTION
Vernon Rosamond
Arizona Lic #: 9793
Date: 8/13/24

iHOUSE APARTMENTS

Tonalea, AZ 86044

U. S. DEPARTMENT OF HEALTH AND HUMAN SERVICES
INDIAN HEALTH SERVICE
DIVISION OF ENGINEERING SERVICES
SEATTLE / DALLAS

No.	Date	Description

Issue Date:	8/13/24
Project No:	23-390
Scale:	1/8" = 1'-0"
Drawn By:	Author
Checked By:	Checker

PHASE IV (Final CD)

Sheet Title:

GENERAL NOTES AND DETAILS - FIRE PROTECTION

Sheet Number:

F001

Autodesk Docs://23-390 IHS iHouse Apt \2023\05-24-0004-BTME MEPF-RVT23.rvt
8/12/2024 4:23:52 PM

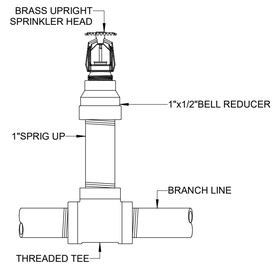

5 UPRIGHT SPRINKLER HEAD ON 1" SPRIG DETAIL
NOT TO SCALE

4 UPRIGHT SPRINKLER HEAD DETAIL
NOT TO SCALE

PROVIDE HEAD GUARDS ON ALL SPRINKLER HEADS AT OR BELOW AN ELEVATION OF 7'-6" AFF, OR THAT OTHERWISE MAY BE SUBJECT TO MECHANICAL DAMAGE, SUCH AS THOSE UNDER STAIRS, IN THE MECHANICAL ROOMS, OR ATTIC SPACE

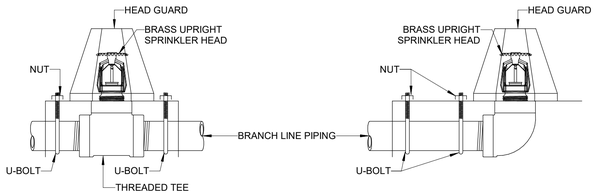

3 SPRINKLER HEAD GUARD DETAIL
NOT TO SCALE

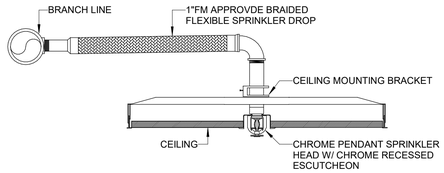

NOTES:
THIS INSTALLATION MAY BE USED IN LIEU OF THE HARD PIPE RETURN BEND INSTALLATION FOR SEISMIC, EASE OF INSTALLATION, TENANT FLEXIBILITY, OWNER, OR SPECIFIC SPRINKLER HEAD LOCATION REQUIREMENTS.

INCLUDE THE EQUIVALENT PIPE LENGTH AS SPECIFIED IN THE MANUFACTURER'S PRODUCT DATA SHEETS IN THE HYDRAULIC CALCULATION REPORTS.

2 1"BRAIDED FLEXIBLE 90° SPRINKLER DROP DETAIL
NOT TO SCALE

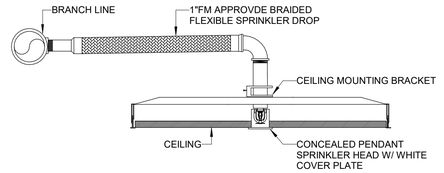

NOTES:
THIS INSTALLATION MAY BE USED IN LIEU OF THE HARD PIPE RETURN BEND INSTALLATION FOR SEISMIC, EASE OF INSTALLATION, TENANT FLEXIBILITY, OWNER, OR SPECIFIC SPRINKLER HEAD LOCATION REQUIREMENTS.

INCLUDE THE EQUIVALENT PIPE LENGTH AS SPECIFIED IN THE MANUFACTURER'S PRODUCT DATA SHEETS IN THE HYDRAULIC CALCULATION REPORTS.

1 1"BRAIDED FLEXIBLE 90° SPRINKLER DROP DETAIL
NOT TO SCALE

JOHNSON SMITTHIPONG & ROSAMOND ASSOCIATES, INC.
5210 E Williams Cir • Ste 600 • Tucson, AZ 85711 •
(520) 547-7904 www.jsrarchinc.com

Consultants:

Bernhard TME Engineering
2990 N. Swan Road
Suite 227
Tucson, Arizona 85712
Phone: (520) 323-2381
tme@bernhardtme.com

ISSUED FOR INTERIM REVIEW
THIS DOCUMENT IS NOT TO BE USED FOR REGULATORY APPROVAL, PERMIT, OR CONSTRUCTION
Vernon Rosamond
Arizona Lic #: 9793
Date: 8/13/24

iHOUSE APARTMENTS

Tonalea, AZ 86044

U. S. DEPARTMENT OF HEALTH AND HUMAN SERVICES
INDIAN HEALTH SERVICE
DIVISION OF ENGINEERING SERVICES
SEATTLE / DALLAS

No.	Date	Description

Issue Date:	8/13/24
Project No:	23-390
Scale:	NOT TO SCALE
Drawn By:	Author
Checked By:	Checker

PHASE IV (Final CD)

Sheet Title:

SPRINKLER DETAILS - FIRE PROTECTION

Sheet Number:

F002

Autodesk Docs://23-390 IHS iHouse Apt \2023\05-24-0004-BTME MEPF-RVT23.rvt
8/12/2024 4:23:52 PM

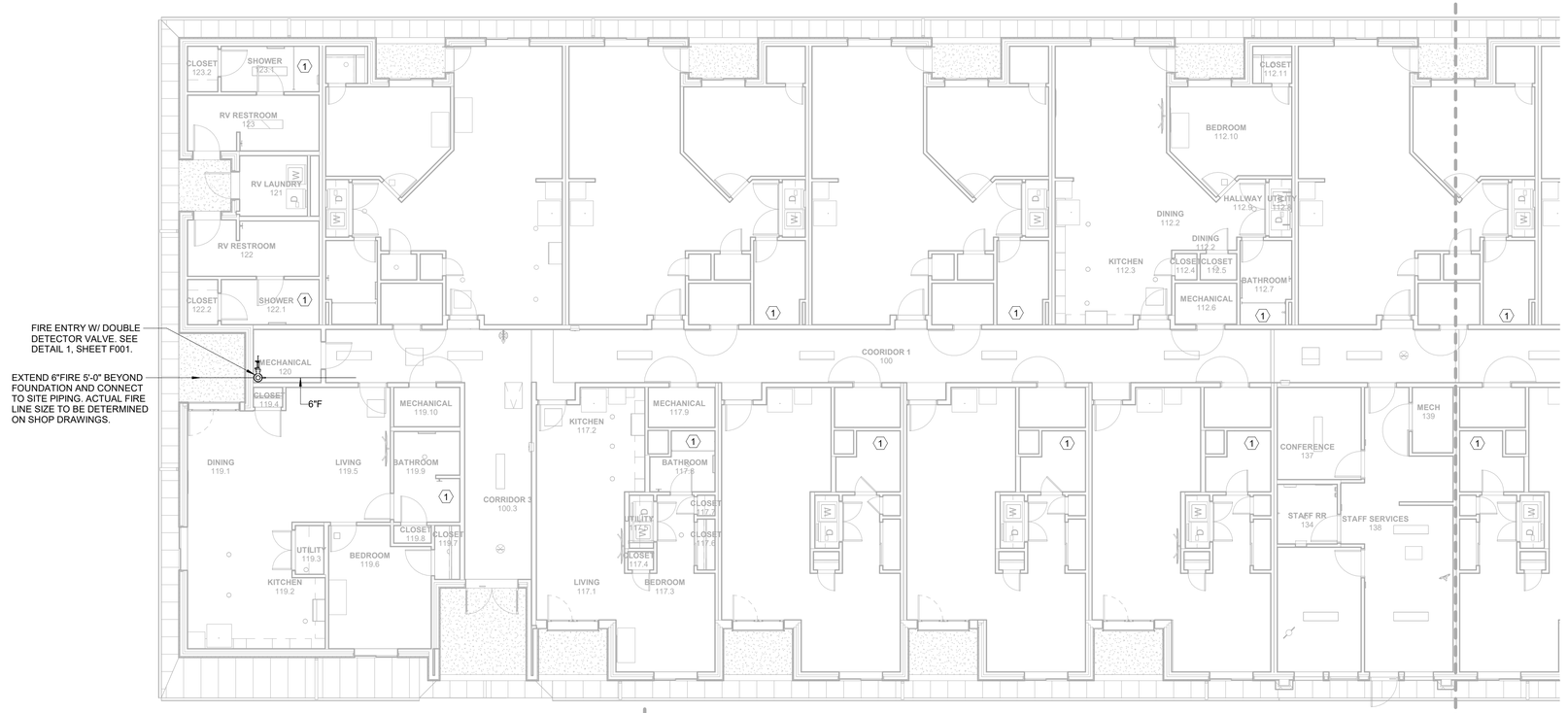

1 FIRE PROTECTION - WEST
1/8" = 1'-0"

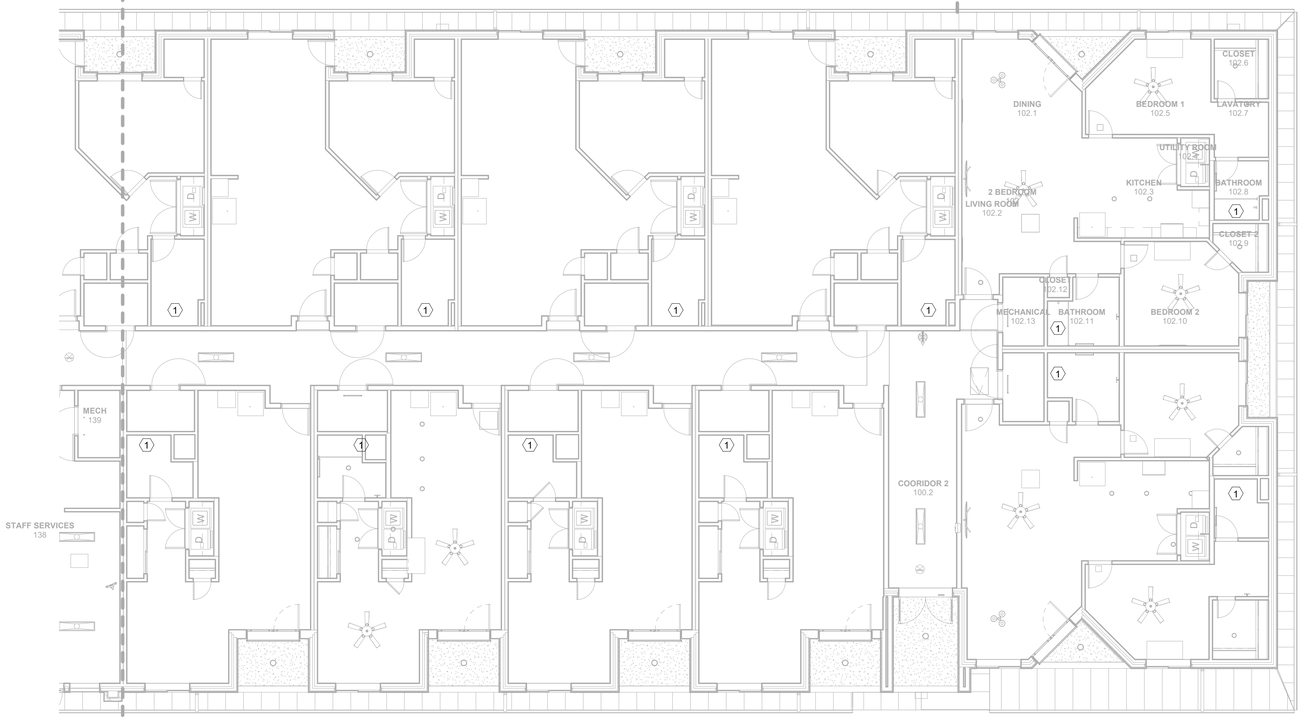

2 FIRE PROTECTION - EAST
1/8" = 1'-0"

GENERAL NOTES:

A. UNLESS OTHERWISE NOTED, PROVIDE CONCEALED SPRINKLER HEADS. SEE DETAIL 1, SHEET F002.

KEYED NOTES:

1 DO NOT PLACE SPRINKLERS DIRECTLY IN SHOWERS.

JSRa
JOHNSON SMITTHIPONG & ROSAMOND ASSOCIATES, INC.
5210 E Williams Cir • Ste 600 • Tucson, AZ 85711 •
(520) 547-7904 www.jsrarchinc.com

Consultants:

Bernhard TME Engineering
2990 N. Swan Road
Suite 227
Tucson, Arizona 85712
Phone: (520) 323-2381
tme@bernhardtme.com

ISSUED FOR INTERIM REVIEW
THIS DOCUMENT IS NOT TO BE USED FOR REGULATORY APPROVAL, PERMIT, OR CONSTRUCTION
Vernon Rosamond
Arizona Lic #: 9793
Date: 8/13/24

iHOUSE APARTMENTS

Tonalea, AZ 86044

U. S. DEPARTMENT OF HEALTH AND HUMAN SERVICES
INDIAN HEALTH SERVICE
DIVISION OF ENGINEERING SERVICES
SEATTLE / DALLAS

No.	Date	Description

Issue Date:	8/13/24
Project No:	23-390
Scale:	1/8" = 1'-0"
Drawn By:	Author
Checked By:	Checker

PHASE IV (Final CD)

Sheet Title:

FIRST FLOOR PLAN - FIRE PROTECTION

Sheet Number:

F201

Autodesk Docs://23-390 IHS iHouse Apt v2023l05-24-0004-BTME MEPF-RVT23.rvt
8/12/2024 4:23:53 PM

PLUMBING MATERIALS

A. PIPE AND FITTINGS

1. DOMESTIC HOT AND COLD WATER:

   (A) UNDERGROUND - TYPE "K" HARD DRAWN COPPER WITH WROUGHT COPPER FITTINGS.

   (B) ABOVE GRADE - TYPE "L" HARD DRAWN COPPER WITH WROUGHT COPPER FITTINGS.

2. SANITARY SOIL, WASTE AND VENT:

   (A) UNDERGROUND - DWV PVC AND SOLVENT CEMENTED SOCKET FITTINGS.

   (B) ABOVE GRADE - DWV PVC AND SOLVENT CEMENTED SOCKET FITTINGS.

B. PIPE JOINTS

1. SWEAT SOLDER JOINTS IN COPPER PIPING SYSTEMS SHALL BE MADE WITH STAY-SAFE "BRIDGIT" LEAD FREE BEARING SOLDER WITH STAY-CLEAN LIQUID OR STAY-CLEAN PASTE FLUX BY J.W. HARRIS AND CO. INC.

2. SOLVENT CEMENT JOINTS IN PVC PIPING SYSTEMS.

C. VALVES

1. BALL VALVES SHALL HAVE CHROME PLATED BRASS BALL, VINYL COVERED STEEL HANDLE, TEFLON OR TFE SEATS, TWO-PIECE CONSTRUCTION. VALVES SHALL BE 150 LB. CLASS, MILWAUKEE BA-50, CRANE 9322 , OR WATTS B6001.

2. CHECK VALVES SHALL HAVE BRASS BODY WITH SCREW PATTERN; MILWAUKEE NO. 509, STOCKHAM OR HAMMOND.

3. PLUG VALVES (COCKS): IRON BODIES WITH SCREW PATTERN; A.Y. MCDONNEL #10686, NORDSTROM FIG. 114 OR NORDSTROM FIG. 115.

D. PIPE INSULATION

1. FIBERGLASS, 1" THICK FOR DOMESTIC HOT WATER AND 1/2" THICK FOR DOMESTIC COLD WATER SYSTEMS; OWENS CORNING TYPE ASJ/SSL-11. ENDS OF FIBERGLASS PIPE INSULATION SHALL BE SEALED WITH FOSTER 30-35 COATING AT ALL FLANGES, VALVES, FITTINGS, AND AT INTERVALS OF NOT MORE THAN 20' OF CONTINUOUS RUNS OF PIPE. VALVE BODIES AND BONNETS SHALL BE INSULATED. NO STAPLES SHALL BE PERMITTED FOR INSTALLATION OF INSULATION.

E. PIPE HANGERS AND SUPPORTS

1. HANGERS - ADJUSTABLE CARBON STEEL CLEVIS; GRINNEL NO. 260, CT-65.

2. VERTICAL SUPPORT - STEEL RISER CLAMP.

3. PROVIDE COPPER PLATED HANGERS AND SUPPORTS FOR COPPER PIPING.

4. SPACE SUPPORTS NO MORE THAN 8 FEET APART FOR 10-FOOT SECTION OF CAST IRON SOIL PIPE WITH A MINIMUM OF TWO SUPPORTS PER 10-FOOT SECTION. SUPPORT HORIZONTAL SOIL PIPE NEAR EACH HUB. SUPPORTS FOR COPPER PIPE SHALL BE SPACED NO MORE THAN 5 FEET APART.

F. DRAIN PANS

1. ALL FLOOR DRAIN, EXCEPT FOR THOSE IN CONCRETE SLAB ABOVE EARTHFILL, SHALL BE PROVIDED WITH NON-PLATICIZED CHLORINATED POLYETHYLENE, "CHLORALOY 240" BRAND CONCEALED WATERPROOFING MEMBRANE.

PLUMBING LEGEND

SYMBOL	DESCRIPTION
D	INDIRECT DRAIN (D) ABOVE FLOOR
	BALL VALVE
	GATE VALVE
	OS & Y GATE VALVE
	GLOBE VALVE
	CHECK VALVE (SWING CHECK)
	PRESSURE REDUCING VALVE
	VALVE AT RISER
	STRAINER W/ DRAIN VALVE
	UNION
	BALANCING COCK
TS	OS & Y GATE VALVE W/ TAMPER SWITCH
	GAS VALVE
TS	TAMPER SWITCH
FS	FLOW STATION
	FLEXIBLE PIPE CONNECTOR
	PRESSURE GAUGE
	THERMOMETER W/ INSERTION WELL
	WATER HAMMER ARRESTER
	HOSE BIBB (HB)
	ELBOW, TURNED UP
	ELBOW, TURNED DOWN
	RISE OR DROP IN PIPE
	TEE, SIDE CONNECTION
	TEE, OUTLET UP
	TEE, OUTLET DOWN
	CAPPED OUTLET
	CAPPED PIPE
	DIRECTION OF PITCH
TFD	PIPE TO FLOOR DRAIN

SYMBOL	DESCRIPTION
	NEW EQUIPMENT
	EXISTING EQUIPMENT
SS	SANITARY SEWER BELOW FLOOR
	SANITARY VENT (V)
	COLD WATER (CW)
	HOT WATER (HW)
	HOT WATER RETURN (HWR)

PLUMBING DEMOLITION LEGEND

SYMBOL	DESCRIPTION
WC-1	PLUMBING FIXTURE
FD	FLOOR DRAIN
VTR	VENT THRU ROOF
COP	CLEANOUT PLUG
FCO	FLOOR CLEANOUT
WCO	WALL CLEANOUT
COTG	CLEANOUT TO GRADE
	POINT OF CONNECTION TO EXISTING
	TERMINATION OF DEMOLITION
P1 / M3.1	PARTIAL PLAN NUMBER / SHEET NUMBER — PARTIAL PLAN DESIGNATION
R1 / M3.1	RISER NUMBER / SHEET NUMBER — RISER DESIGNATION

SYMBOL	DESCRIPTION
	EXISTING EQUIPMENT TO REMAIN
	EXISTING PIPING TO REMAIN
	EQUIPMENT TO BE REMOVED
	EXISTING PIPING TO BE REMOVED
	TERMINATION OF DEMOLITION

ADA REQUIREMENTS

THIS APPLIES TO HANDICAPPED ACCESSIBLE FIXTURES ONLY.

WATER CLOSETS: THE HEIGHT OF WATER CLOSETS SHALL BE 17" TO 19" MEASURED TO THE TOP OF THE TOILET SET. SEATS SHALL NOT BE SPRUNG TO RETURN TO A LIFTED POSITION. THE WATER CLOSET SHALL BE LOCATED 18" FROM THE SIDE WALL TO THE CENTER LINE OF THE BOWL. HAND OPERATED FLUSH CONTROLS SHALL BE MOUNTED ON THE WIDE SIDE OF TOILET AREAS NO MORE THAN 29" ABOVE THE FINISH FLOOR. SEE ARCHITECTURAL DRAWINGS FOR GRAB BAR LOCATIONS.

URINALS: THE URINALS SHALL BE WALL HUNG WITH AN ELONGATED RIM AT A MAXIMUM OF 17" ABOVE THE FINISH FLOOR. HAND OPERATED FLUSH CONTROLS SHALL BE MOUNTED NO MORE THAN 44" ABOVE FINISH FLOOR.

LAVATORIES: LAVATORIES SHALL BE MOUNTED WITH THE RIM OR COUNTER SURFACE NO HIGHER 34" ABOVE THE FINISH FLOOR. PROVIDE A CLEARANCE OF AT LEAST 29" ABOVE THE FINISH FLOOR TO THE BOTTOM OF THE APRON. KNEE SPACE SHALL BE 8" FROM BOTTOM EDGE OF APRON TO THE LEADING EDGE OF THE BOTTOM OF THE BOWL. THE BOTTOM OF THE BOWL SHALL BE A MINIMUM OF 27" ABOVE THE FINISH FLOOR. ALL WATER AND DRAIN PIPING UNDER LAVATORIES SHALL BE INSULATED WITH A FOAM INSERT COVERED WITH A 1/8" VINYL OUTER SHELL. ANGLE STOPS SHALL HAVE A FLIP TOP ACCESS.

FAUCETS - BATHTUB - SHOWER CONTROLS: CONTROLS SHALL BE LEVER HANDLES OPERABLE WITH ONE HAND AND SHALL NOT REQUIRE TIGHT GRASPING, PINCHING, OR TWISTING OF THE WRIST. THE FORCE REQUIRED TO ACTIVATE CONTROLS SHALL BE NO GREATER THAN 5 LBF.

BATHTUB: AN IN TUB SEAT OR A SEAT AT THE HEAD END OF THE TUB SHALL BE PROVIDED. SEATS SHALL BE MOUNTED SECURELY AND SHALL NOT SLIP DURING USE. IN ADDITION TO THE FIXED SHOWER HEAD PROVIDE A HAND HELD SHOWER SPRAY UNIT WITH A HOSE AT LEAST 60" LONG THAT CAN BE USED BOTH AS A FIXED SHOWER HEAD AND AS A HAND HELD SHOWER HEAD. SEE ARCHITECTURAL DRAWINGS FOR GRAB BAR LOCATIONS.

SHOWER: A SEAT SHALL BE PROVIDED IN SHOWER STALLS 36"X36". THE SEAT SHALL BE MOUNTED ON THE WALL OPPOSITE OF THE CONTROLS AND 17" TO 19" FROM THE BATHROOM FLOOR AND SHALL EXTEND THE FULL DEPTH OF THE STALL. SHOWER CONTROLS SHALL BE MOUNTED ON THE WALL OPPOSITE OF THE SEAT AND SHALL BE LOCATED ON THE SAME WALL AS THE SHOWER HEAD, AT MINIMUM HEIGHT OF 38" AND A MAXIMUM HEIGHT OF 48". IN ADDITION TO THE FIXED SHOWER HEAD PROVIDE A HAND HELD SHOWER SPRAY UNIT WITH A HOSE AT LEAST 60" LONG THAT CAN BE USED BOTH AS A FIXED SHOWER HEAD AND AS A HAND HELD SHOWER HEAD. IN A 30"X 60" SHOWER UNIT A FIXED SEAT SHALL BE PROVIDED, IT SHALL BE A FOLDING TYPE AND SHALL BE MOUNTED ON THE WALL ADJACENT TO THE CONTROLS. SEE ARCHITECTURAL DRAWINGS FOR GRAB BAR LOCATIONS.

SINKS: SINKS SHALL BE MOUNTED WITH THE RIM OR COUNTER SURFACE NO HIGHER 34" ABOVE THE FINISH FLOOR. PROVIDE A KNEE CLEARANCE OF AT LEAST 27" HIGH, 30" WIDE, AND 19" DEEP. SINKS SHALL BE A MAXIMUM OF 6 1/2" DEEP. ALL WATER AND DRAIN PIPING UNDER LAVATORIES SHALL BE INSULATED WITH A FOAM INSERT COVERED WITH A 1/8" VINYL OUTER SHELL. ANGLE STOPS SHALL HAVE A FLIP TOP ACCESS.

PLUMBING GENERAL NOTES:

1. ALL WORK IS TO CONFORM TO THE LATEST EDITIONS OF THE AZ. STATE PLUMBING CODE, AZ. IHS CODES, NFPA AND ALL LOCAL ORDINANCES.
2. BY NECESSITY, THESE DRAWINGS REFLECT A SYSTEM DESIGNED AROUND SPECIFIC REFERENCE PRODUCTS, THE SOLUTION OF WHICH HAS IMPACTED THE DESIGNS OF OTHER TRADES (ELECTRICAL, STRUCTURAL ETC). IF ALTERNATE MANUFACTURERS, FUEL SOURCES, SIZES, OR MODEL NUMBERS ARE SUBMITTED OR BID, IT IS THE RESPONSIBILITY OF THE GENERAL CONTRACTOR AND ALL SUBCONTRACTORS TO COORDINATE ALL DIFFERENCES PRIOR TO BID. THE SUBSTITUTING CONTRACTOR SHALL BE RESPONSIBLE FOR AND SHALL PAY FOR CHANGES REQUIRED TO OTHER TRADES IF ALTERNATE EQUIPMENT IS BID OR INSTALLED AT THE CONTRACTORS OPTION.
3. ALL DRAWINGS ARE DIAGRAMMATIC AND INDICATE THE GENERAL ARRANGEMENTS OR GEOMETRIC RELATIONSHIPS OF EQUIPMENT AND SERVICES. THEY ARE NOT INTENDED TO SPECIFY OR SHOW EVERY OFFSET, FITTING, OR COMPONENT. CONTRACTOR SHALL NOT SCALE DRAWINGS. EQUIPMENT SCHEDULES SHALL TAKE PRECEDENCE OVER CONFLICTING DRAWING INFORMATION. DRAWINGS SPECIFIC TO THIS DISCIPLINE DO NOT LIMIT THE RESPONSIBILITY OF WORK REQUIRED BY CONTRACT DOCUMENTS. REFER TO ARCHITECTURAL, STRUCTURAL, ELECTRICAL, AND OTHER DRAWINGS FOR COMPLETE INFORMATION.
4. EXCEPT WHERE MODIFIED BY SPECIFIC NOTATION TO THE CONTRARY, IT SHALL BE UNDERSTOOD THAT THE INDICATION AND/OR DESCRIPTION OF ANY ITEM, IN THE DRAWINGS OR SPECIFICATIONS OR BOTH, CARRIES WITH IT THE INSTRUCTION TO FURNISH AND INSTALL THE ITEM, REGARDLESS OF WHETHER OR NOT THIS INSTRUCTION IS EXPLICITLY STATED AS PART OF THE INDICATION OR DESCRIPTION.
5. EXACT LOCATION OF ALL EQUIPMENT AND PIPING SHALL BE COORDINATED WITH OTHER TRADES. CEILING MOUNTED SPRINKLER, LIGHTING AND ELECTRICAL REQUIREMENTS TAKE PRECEDENCE OVER CEILING MOUNTED MECHANICAL REQUIREMENTS.
6. ALL PLUMBING SYSTEMS SHALL BE INSTALLED AS PER SPECIFICATIONS AND GOVERNING CODES.
7. INFORMATION AND COMPONENTS SHOWN ON RISER DIAGRAMS OR DETAILS, BUT NOT SHOWN ON PLANS, AND VICE-VERSA, SHALL BE PROVIDED AS IF EXPRESSLY REQUIRED BY BOTH.
8. CONTRACTOR SHALL BE RESPONSIBLE FOR COORDINATING ALL WORK WITH THAT OF OTHER TRADES, HVAC, STRUCTURAL, CIVIL, ETC. SEE ARCHITECTURAL AND STRUCTURAL DRAWINGS FOR BUILDING DETAILS AND DIMENSIONS. REFER TO CIVIL PLANS FOR ALL UTILITY CONNECTION POINTS OUTSIDE THE BUILDING.
9. REFER TO SPECIFICATIONS OR SCHEDULES ON DRAWINGS FOR ACCEPTABLE MANUFACTURERS AND MODELS OF PLUMBING FIXTURES AND EQUIPMENT, AND PROPER APPLICATIONS OF SAME
10. PROVIDE CLEANOUTS IN ALL SANITARY, STORM DRAINAGE & OVERFLOW LINES, WHETHER SHOWN OR NOT, AT INTERVALS NOT TO EXCEED 50 FEET, AT EACH DIRECTION 45 DEGREES AND GREATER, AND ON ALL VERTICAL RISERS AT A HEIGHT OF 18" A.F.F. AT THE BASE OF EACH STACK.
11. PROVIDE PRESSURE REDUCERS IN WATER SUPPLY LINES TO KEEP PRESSURE BELOW 70 PSI AT ALL OUTLETS. MINIMUM PRESSURE ACCEPTABLE AT WATER OUTLETS IS 25 PSI AT DIRECT SUPPLY FLUSH VALVES, AND 8 PSI AT ALL OTHER OUTLETS.
12. INSULATE ALL WATER LINES ABOVE FLOOR. INSULATE ALL HORIZONTAL STORM LINES (EXCLUDING OVERFLOW LINES) ABOVE FLOOR.
13. INSULATE ALL CONDENSATE LINES INSIDE BUILDING AS PER INSULATION REQUIREMENTS FOR COLD WATER LINE, IN SPECIFICATIONS.
14. SLEEVE AND SEAL ALL PIPE PENETRATIONS THRU RATED WALLS AND FLOORS. PIPE SLEEVES THROUGH FLOORS SHALL TERMINATE A MINIMUM OF 2" ABOVE FINISHED FLOOR. PLASTIC PIPING SHALL NOT BE USED TO PENETRATE FIRE RATED CONSTRUCTION.
15. PROVIDE WATER HAMMER ARRESTORS IN BRANCH WATER LINES AS REQUIRED BY GOOD PRACTICE, AT ALL QUICK CLOSING VALVES OR MINIMUM OF ONE ARRESTOR FOR EACH FIXTURE OR BANK OF FIXTURES.
16. PROVIDE STOP VALVES AT EVERY FIXTURE ON BOTH HOT AND COLD WATER SUPPLY LINES. VALVES, ESCUTCHEONS, FITTINGS, ETC. SHALL BE CHROMIUM PLATED WHERE PIPING IS EXPOSED.
17. PROVIDE TRAP PRIMERS ON ALL RESTROOM FLOOR DRAINS, AS WELL AS FLOOR DRAINS IN FAN ROOMS, COIL ROOMS, SPRINKLER ROOMS, OR WHERE ANY DRAIN IS FOR INFREQUENT DISCHARGE OF WASTE WATER. LOCATE TRAP PRIMER VALVES IN ACCESSIBLE LOCATION OR PROVIDE ACCESS PANEL. DO NOT LOCATE TRAP PRIMER VALVES OR PIPING IN PUBLIC ACCESSIBLE AREAS. PRO-SET TRAP GUARDS MAY BE SUBSTITUTED FOR TRAP PRIMER VALVES.
18. ALL PIPE DROPS FROM CEILING PLENUM TO BELOW FLOOR SHALL BE MADE IN FURR-OUTS AT COLUMNS, IN WEBB OF BEAMS AT COLUMNS, OR IN WALLS UNLESS SHOWN OTHERWISE.
19. ALL EXPOSED OR ACCESSIBLE P-TRAPS SHALL BE CHROME PLATED AND PROVIDED WITH BOTTOM CLEANOUT PLUGS
20. PROVIDE INSULATION AT ALL EXPOSED HOT WATER & DRAIN PIPING FOR HANDICAP FIXTURES PER ANSI A117.1 AND ADA REQUIREMENTS.
21. SEE THIS SHEET FOR PLUMBING LEGEND AND FIXTURE SCHEDULE.
23. HOT AND COLD WATER SUPPLIES TO FIXTURES SHALL BE AS SHOWN IN PLUMBING FIXTURE SCHEDULE.
24. ALL SUPPLIES SHALL BE PROVIDED WITH A HIGH EAR COUPLING EQUAL TO MUELLER NO. C-100HE OR E-211 (1/2", 3/4", OR 1" SIZE) AT THE WALL (ANCHORED TO CROSS-MEMBER SUPPORT) BEFORE PIPE ENTERS ROOM SPACE TO ASSURE NO PIPE MOVEMENT WITHIN WALL CAVITY.
25. ALL VENTS THROUGH ROOF SHALL BE PROVIDE WITH 6# LEAD FLASHING OR ELASTOMERIC FLASHING SYSTEM TO MAINTAIN ROOF WARRANTY.
26. ⬡ WHERE THIS SYMBOL OCCURS ON THE DRAWINGS, REFERENCE SHOULD BE MADE TO THE KEYED NOTES ON THAT SAME SHEET AND THE CORRESPONDING NUMBER OF NOTE.
27. IN ALL AREAS SUBJECT TO FREEZING, WATER PIPING SHALL BE INSTALLED ON THE THERMAL SIDE OF THE INSULATION.
28. THE CONTRACTOR SHALL, PRIOR TO THE START OF ANY WORK UNDER THIS CONTRACT, VISIT JOB SITE TO VERIFY SIZE, ELEVATION, LOCATION, ETC., OF ANY EXISTING PIPING NOTED, SHOWN OR IMPLIED, TO WHICH NEW PIPING IS RELATED OR CONNECTED.
29. CUT WALLS, FLOORS OR CEILINGS AS REQUIRED TO INSTALL NEW PIPING. ALL FURRING AND REPAIRING SHALL BE BY THE GENERAL CONTRACTOR. COORDINATE REQUIREMENTS WITH GENERAL CONTRACTOR.
30. NO STRUCTURAL MEMBERS MAY BE CUT OR MODIFIED WITHOUT THE WRITTEN PERMISSION OF THE STRUCTURAL ENGINEER.
31. EACH FIXTURE OR GROUP OF FIXTURES SHALL BE PROVIDED WITH A SHUT OFF VALVE IN THE CEILING SPACE. PROVIDE AN ACCESS PANEL IN SOLID CEILINGS.
32. LOCATION OF FLOOR DRAINS IN MECHANICAL ROOMS SHALL BE COORDINATED WITH MECHANICAL EQUIPMENT AND MECHANICAL CONTRACTOR.
33. CONTRACTOR SHALL PAY FOR ALL LICENSES, PERMITS, FEES, AND UTILITY FEES REQUIRED TO DO THE WORK OF THIS CONTRACT.
34. MAINTAIN A DISTANCE OF 10'-0" FROM A SANITARY VENT THROUGH THE ROOF AND ANY FRESH AIR INTAKES.
35. ALL PIPING IS TO BE CONCEALED UNLESS NOTED OTHERWISE. ALL EXPOSED PIPING IS TO BE CHROMIUM PLATED.
36. PROVIDE BACKFLOW PREVENTERS OR ANTI-SIPHON DEVICES AT ALL LOCATIONS WHERE THERE IS A POSSIBILITY OF CROSS CONTAMINATION.
37. MAKE ALL UTILITY CONNECTIONS AND INSTALLATIONS IN FULL ACCORDANCE WITH ALL UTILITY REGULATIONS. PROVIDE ALL ADDITIONAL APPERTENANCES AS REQUIRED BY THE UTILITY COMPANY. THE COMPLETED INSTALLATION SHALL BE IN ACCORDANCE WITH ALL APPLICABLE INDUSTRY STANDARDS OF GOOD PRACTICE AND SAFETY, AND THE MANUFACTURER'S STRICTEST RECOMMENDATIONS FOR EQUIPMENT AND PRODUCT APPLICATION AND INSTALLATION.
38. THE CONTRACTOR SHALL OBTAIN AND PAY FOR ALL PERMITS, LICENSES, DOCUMENTS AND SERVICES RELATED TO THE INSTALLATION OF THE WORK.
39. MAINTAIN ALL MANUFACTURER'S RECOMMENDED SERVICE CLEARANCES FOR ALL FIXTURES AND EQUIPMENT. REFER TO ARCHITECTURAL DRAWINGS FOR EXACT LOCATIONS OF PLUMBING FIXTURES.
40. CUTTING OF ROOF AND FLASHING OF PIPE CURBS, SANITARY VENT THROUGH ROOF, ETC., SHALL BE COORDINATED WITH AND PERFORMED BY THE ROOFING CONTRACTOR, AT THIS CONTRACTOR'S EXPENSE, TO MAINTAIN THE ROOF WARRANTY.
41. ALL ABOVE GRADE HORIZONTAL PIPING SHALL BE INSTALLED AS HIGH AS POSSIBLE.

JSRa
JOHNSON SMITTHIPONG & ROSAMOND ASSOCIATES, INC.
5210 E Williams Cir • Ste 600 • Tucson, AZ 85711 •
(520) 547-7904 www.jsrarchinc.com

Consultants:

Bernhard TME Engineering
2990 N. Swan Road
Suite 227
Tucson, Arizona 85712
Phone: (520) 323-2381
tme@bernhardtme.com

ISSUED FOR INTERIM REVIEW
THIS DOCUMENT IS NOT TO BE USED FOR REGULATORY APPROVAL, PERMIT, OR CONSTRUCTION
Vernon Rosamond
Arizona Lic #: 9793
Date: 8/13/24

iHOUSE APARTMENTS

Tonalea, AZ 86044

U. S. DEPARTMENT OF HEALTH AND HUMAN SERVICES
INDIAN HEALTH SERVICE
DIVISION OF ENGINEERING SERVICES
SEATTLE / DALLAS

No.	Date	Description

Issue Date:	8/13/24
Project No:	23-390
Scale:	1/8" = 1'-0"
Drawn By:	Author
Checked By:	Checker

PHASE IV (Final CD)

Sheet Title:

LEGENDS AND NOTES - PLUMBING

Sheet Number:

P001

Autodesk Docs://23-390 IHS iHouse Apt v2023\05-24-0004-BTME MEPF-RV123.rvt
8/12/2024 3:54:37 PM

PLUMBING PIPING SPECIALTIES SCHEDULE

ITEM	FIXTURE	DESCRIPTION	SIZE	COLD	HOT
FS-1	FLOOR SINK	ZURN ZN-1910-P-2, 8"x8"x6" DEEP, CAST IRON BODY AND SQUARE, MEDIUM DUTY GRATE, WHITE ACID RESISTING PORCELAIN ENAMEL INTERIOR AND TOP, WITH WHITE ABS ANTI-SPLASH INTERIOR BOTTOM DOME, 1/2 GRATE. PROVIDE WITH Z1072 TRAP SEAL INSERT.	AS NOTED	-	-
HB-1	FREEZEPROOF WALL HYDRANT	ZURN Z-1300 "ECOLOTROL", ANTI-SIPHON, NON-FREEZE, 3/4" SIZE, NICKEL BRONZE CASING AND ALL BRONZE INTERIOR PARTS, POLISHED NICKEL BRONZE FACE, INTEGRAL BACKFLOW PREVENTER, UNION ELBOW INLET, WALL CLAMP AND KEY HANDLE.	-	3/4"	-
WCO	WALL CLEANOUT	ZURN Z-1441-BP, CAST IRON NO-HUB CLEANOUT FERRULE, BRONZE PLUG. STAINLESS STEEL ROUND FLAT ACCESS COVER PLATE (OUTDOOR APPLICATION ONLY.) METAL, FACTORY WHITE PAINTED, ROUND FLAT ACCESS COVER PLATE (INDOOR APPLICATION ONLY.)	AS NOTED	-	-
FCO	FLOOR CLEANOUT	ZURN ZN-1400-BP-VP "LEVEL-TROL", CAST IRON, GASKETED HUB OUTLET, THREADED ADJUSTABLE HOUSING, BRONZE PLUG, NICKEL BRONZE SCORIATED TOP, VANDAL-PROOF SCREWS.	AS NOTED	-	-
WHA-1	WATER HAMMER ARRESTORS	ZURN "SHOKTROL", SIZED IN ACCORDANCE WITH PDI-WH201 AND ASSE-1010. BELLOWS AND CASING SHALL BE CONSTRUCTED OF STAINLESS STEEL, MAXIMUM WORKING PRESSURE OF 250 PSIG.	AS NOTED	-	-
TMV-1	TEMPERATURE MIXING VALVE	WATTS 3/4" LFMMV THERMOSTATIC MIXING VALVE, LEAD FREE, SOLDER CONNECTION, 0.5 GPM MINIMUM FLOW/12 GPM MAXIMUM FLOW, INTEGRAL FILTER WASHERS AND CHECK VALVES. SET TO 120F HOT WATER DISCHARGE.	-	3/4"	3/4"
TMV-2	TEMPERATURE MIXING VALVE	WATTS 1/2" LFMMV THERMOSTATIC MIXING VALVE, LEAD FREE, SOLDER CONNECTION, 0.5 GPM MINIMUM FLOW/12 GPM MAXIMUM FLOW, INTEGRAL FILTER WASHERS AND CHECK VALVES. SET TO 120F HOT WATER DISCHARGE.	-	1/2"	1/2"

APPROVED MANUFACTURERS:

1. HOSE BIBBS: CHICAGO FAUCET, T&S BRASS, WOODFORD
2. THERMOSTATIC MIXING VALVES: SYMMONS, POWERS, LEONARD
3. BACKFLOW PREVENTERS: ZURN, WATTS

Water Usage per year per EPA Water Sense Data and Equations (Fixture water usage inputs from fixtures used on project)

Toilets											
1.0 gpf	x	5 Tlt uses per person per day	x	See to below # of occupants	x	365 days per year	=	3,650 5,475	Gal per Year Gal per Year	1 bed 2 bed	
Bathroom sink faucets											
0.35 gpm	x	0.53 avg min per day per occupant	x	See to below # of occupants	x	365 days per year	=	135 203	Gal per Year Gal per Year	1 bed 2 bed	
showers											
0.625 gpm	x	5 Minutes per shower	x	0.7 shwrs per day per person	x	See to below # of occupants	x	365 days per year	=	1,597 2,395	Gal per Year Gal per Year	1 bed 2 bed
Kitchen Faucet											
0.5 gpm	x	25.7 avg min per day per occupant	x	See to below # of occupants	x	365 days per year	=	9,381 14,071	Gal per Year Gal per Year	1 bed 2 bed	
Clothes Washer											
20 gallons per load	x	0.3 Loads per day per occupant	x	See to below # of occupants	x	365 days per year	=	4,380 6,570	Gal per Year Gal per Year	1 bed 2 bed	

1 bed	2	Occupants	Total Usage per year	=	19,143	Gal per Year	1 bed
2 bed	3	Occupants			28,714	Gal per Year	2 bed

WATER HAMMER ARRESTOR SCHEDULE

P.D.I. UNITS	A	B	C	D	E	F
FIXTURE UNITS	1-11	12-32	33-60	61-113	114-154	155-330

CLASSIFICATIONS ESTABLISHED BY THE PLUMBING AND DRAINAGE INSTITUTE "STANDARD P.D.I.-WH201".

APPROVED MANUFACTURERS:

1. ZURN, WADE, J.R. SMITH, JOSAM, MIFAB

PLUMBING FIXTURE SCHEDULE

ITEM	FIXTURE	DESCRIPTION	WATER USAGE 1 BED / 2 BED	TRAP	COLD	HOT
WC-1	WATER CLOSET	GERBER VIPER GWS20528, VITREOUS CHINA, ADA COMPLIANT 17-1/8" RIM HEIGHT, ELONGATED BOWL, FLOOR MOUNTED, WHITE, 1.0 GALLON PER FLUSH; ; SUPPLIES: MCGUIRE 2166 CC WHEEL HANDLE STOP; SEAT: BEMIS AFFINITY 200E4 RESIDENTIAL PLASTIC SEAT, NEVER LOOSEN FASTENERS, SLOW CLOSE, GRIP BUMPERS, FINISH WHITE.	3,650 / 5,475 GAL PER YEAR	INTEGRAL	3/4"	-
L-1	LAVATORY	AMERICAN STANDARD 0475.028 "AQUALYN", ADA BARRIER FREE, VITREOUS CHINA, OVAL BASIN, 20" X 17" SIZE, FRONT OVERFLOW, COUNTER MOUNTED, HOLES ON 4" CENTERS; TRIM: T&S BRASS 2710-VF05 FAUCET, 4-3/8" SPOUT WITH METAL POP-UP DRAIN ASSEMBLY, B-0199-04-N035 0.35 GPM VANDAL-RESISTANT AERATOR, CERAMIC DISC, ADA COMPLIANT SINGLE LEVER HANDLE. LEONARD 170-LF-BP-BRKT-CP MIXING VALVE, MOUNTING BRACKET, ASSE 1070 DOWN TO .25 GPM WITH COLD WATER BYPASS.	135 / 203 GAL PER YEAR	1-1/4"	1/2"	1/2"
L-2	LAVATORY	AMERICAN STANDARD 0356.421 "LUCERNE", VITREOUS CHINA, RECTANGULAR BASIN, 20" X 18" SIZE, FRONT OVERFLOW, WALL MOUNTED; TRIM: T&S BRASS B-2701 SINGLE HOLE FAUCET, 5-1/4" SPOUT, B-0199-04-N035, 0.35 GPM VANDAL-RESISTANT AERATOR, CERAMIC DISC, ADA COMPLIANT SINGLE LEVER HANDLE, MCGUIRE 155-A DRAIN; SUPPORT: ZURN Z-1231. LEONARD 170-LF-BP-BRKT-CP MIXING VALVE, MOUNTING BRACKET, ASSE 1070 DOWN TO .25 GPM WITH COLD WATER BYPASS.	135 / 203 GAL PER YEAR	1-1/4"	1/2"	1/2"
L-3	LAVATORY	KOHLER K2714-1 "BRYANT", VITREOUS CHINA, ROUND BASIN, 19" X 19" SIZE, FRONT OVERFLOW, WALL MOUNTED; TRIM: T&S BRASS B-2701 SINGLE HOLE FAUCET, 5-1/4" SPOUT, B-0199-04-N035, 0.35 GPM VANDAL-RESISTANT AERATOR, CERAMIC DISC, ADA COMPLIANT SINGLE LEVER HANDLE, MCGUIRE 155-A DRAIN; SUPPORT: ZURN Z-1231. LEONARD 170-LF-BP-BRKT-CP MIXING VALVE, MOUNTING BRACKET, ASSE 1070 DOWN TO .25 GPM WITH COLD WATER BYPASS.	135 / 203 GAL PER YEAR	1-1/4"	1/2"	1/2"
S-1	KITCHEN SINK	JUST SLFADA1921A65-J, 22" X 19-1/2" X 6-1/2" SIZE, SINGLE COMPARTMENT, 18 GAUGE TYPE 304 STAINLESS STEEL, SINGLE REAR DRAIN, SELF-RIMMING, J-35 S.S. CRUMB CUP STRAINER; TRIM: T&S BRASS B-2866 FAUCET, 5-3/4" SWING SPOUT, B-0199-01-N05 0.5 GPM LAMINAR FLOW AERATOR, CERAMIC DISC, ADA COMPLIANT 4" WRIST ACTION, RIGID CONNECTORS.	9,381 / 14,071 GAL PER YEAR	1-1/2"	1/2"	1/2"
S-2	KITCHEN SINK	JUST DLADA1933A60-J, 22" X 19-1/2" X 6-1/2" SIZE, DOUBLE COMPARTMENT, 18 GAUGE TYPE 304 STAINLESS STEEL, DOUBLE REAR DRAIN, SELF-RIMMING, (2) J-35 S.S. CRUMB CUP STRAINERS; TRIM: T&S BRASS B-2857 FAUCET, 9-1/2" SWING SPOUT, B-0199-01-N05 0.5 GPM LAMINAR FLOW AERATOR, CERAMIC DISC, ADA COMPLIANT 4" WRIST ACTION, RIGID CONNECTORS.	9,381 / 14,071 GAL PER YEAR	1-1/2"	1/2"	1/2"
D-1	DISPOSER LIGHT DUTY	IN-SINK-ERATOR MODEL LC-50-11, STAINLESS STEEL GRIND CHAMBER AND CAST NICKEL CHROME CUTTING ELEMENT, STANDARD WALL SWITCH OPERATED, MOUNTING INCLUDED, 1/2 HP, 60 HZ, 1725 RPM, 120V, 1 PHASE, 5.8 AMPS.	-	1-1/2"		-
WB-1	SUPPLY AND DRAIN UNIT	GUY GRAY MODEL 82583, 5-3/8" X 5-7/8" X 3-1/8" SIZE, 1/4" TURN BALL VALVES WITH HAMMER ARRESTORS WITH TOP WATER INLET, WHITE POWDER COATED STEEL CONSTRUCTION, SWEAT CONNECTION, 2" DRAIN PIPE.	4,380 / 6,570 GAL PER YEAR	2"	1/2"	1/2"
BT-1	BATHTUB	KOHLER K-1946-LA "ARCHER", 60" X 30" X 19", ADA COMPLIANT, ACRYLIC BATHTUB; TRIM: SYMMONS S-9602-PLR "TEMPTROL" PRESSURE BALANCING MIXING VALVE WITH INTEGRAL DIVERTER CONTROL TO GO FROM SHOWERHEAD TO TUB SPOUT, ADJUSTABLE STOP SCREW, 5-1/4" TUB SPOUT, LESS SHOWERHEAD. SHOWERHEAD TO BE: BRICOR ULTRAMAX 0.625 GPM SHOWHEAD (CONTRACTOR TO PROVIDE WATER PRESSURE TO BRICOR); SHOWER ARM BY CONTRACTOR. KOHLER K-7161-AF POP-UP DRAIN, HEAVY DUTY SHOWER ROD AND CURTAIN.	1,597 / 2359 GAL PER YEAR	2"	1/2"	1/2"
BT-2	BATHTUB ADA	KOHLER K-1123-RA "ARCHER" , 60" X 32" X 19", ADA COMPLIANT, ACRYLIC BATHTUB; TRIM: SYMMONS S-9608-PLR "TEMPTROL" PRESSURE BALANCING MIXING VALVE WITH INTEGRAL DIVERTER CONTROL TO GO FROM SHOWERHEAD TO TUB SPOUT, DUAL OUTLET DIVERTER VALVE TO DIVERT FROM SHOWERHEAD TO SHOWER WAND, ADJUSTABLE STOP SCREW, ADA 36" GRAB BAR FOR HAND SHOWER, DUAL CHECKS FOR BACKFLOW PREVENTION, 60" FLEXIBLE METAL HOSE, ADA 1 MODE HAND SHOWER WITH NON-POSITIVE SHUT-OFF, 5-1/4" TUB SPOUT, LESS SHOWERHEAD. SHOWERHEAD TO BE: BRICOR ULTRAMAX 0.625 GPM SHOWHEAD (CONTRACTOR TO PROVIDE WATER PRESSURE TO BRICOR); SHOWER ARM BY CONTRACTOR. KOHLER K-7161-AF POP-UP DRAIN, HEAVY DUTY SHOWER ROD AND CURTAIN.	1,597 / 2359 GAL PER YEAR	2"	1/2"	1/2"
SH-1	SHOWER	SHOWER PAN 3' X 5' BY ARCHITECT. ZURN ZN-415-B, 2" POLISHED NICKEL BRONZE STRAINER, TRIM: SYMMONS S-9601-PLR SHOWERHEAD WITH "TEMPTROL" PRESSURE BALANCING MIXING VALVE. SHOWER ARM BY CONTRACTOR.	1,597 / 2359 GAL PER YEAR	2"	1/2"	1/2"
SH-2	SHOWER	KOHLER 72440110 "MEDLEY", 60" X 30" SHOWER PAN, REFER TO FLOOR PLAN FOR DRAIN LOCATION, TRIM: SYMMONS S-960 1-PLR SHOWERHEAD WITH "TEMPTROL" PRESSURE BALANCING MIXING VALVE. SHOWER ARM BY CONTRACTOR.	1,597 / 2359 GAL PER YEAR	2"	1/2"	1/2"
	EQUIPMENT (BY OTHERS)	ROUGH-IN AND MAKE FINAL CONNECTIONS FOR EQUIPMENT AS INDICATED ON PLANS. PROVIDE CAST BRASS ADJUSTABLE P-TRAPS AND STOPS EQUAL THOSE SPECIFIED IN THIS SCHEDULE, AS REQUIRED.		1-1/4" / 1-1/2"	1/2"	1/2"

NOTES:

1. SUPPLIES: FURNISH AND INSTALL ALL FIXTURE SUPPLIES COMPLETE TO INCLUDE LOOSE KEY HANDLE, CHROME PLATED ANNEALED VERTICAL TUBE, AND CHROME PLATED CAST BRASS SET SCREW ESCUTCHEON; MCGUIRE 2165CCLK, UNLESS NOTED OTHERWISE
2. P-TRAPS: FURNISH AND INSTALL ALL FIXTURE P-TRAPS COMPLETE TO INCLUDE CLEANOUT, 17-GAUGE CHROME PLATED TUBING TO WALL, AND CHROME PLATED CAST BRASS SET SCREW ESCUTCHEON; MCGUIRE 8872 (1-1/4") / MCGUIRE 8912 (1-1/2"), UNLESS NOTED OTHERWISE.

APPROVED MANUFACTURERS:

1. FIXTURES - VITREOUS CHINA: AMERICAN STANDARD, KOHLER, ELJER
2. FIXTURES - STAINLESS STEEL: JUST, ELKAY
3. SEATS: CENTOCO, OLSONITE, BEMIS, BENEKE, CHURCH
4. SUPPORTS: ZURN, WADE, J.R. SMITH, JOSAM, MIFAB
5. FAUCETS (NON-SENSOR): T&S BRASS, CHICAGO FAUCET, KOHLER
6. SUPPLIES AND TRAPS: MCGUIRE, EBC, BRASSCRAFT
7. INSULATION KITS: TRUEBRO, EBC, ZURN
8. SHOWERS: SYMMONS, LEONARD, POWERS
9. DISPOSALS: IN-SINK-ERATOR, ELKAY, GENERAL ELECTRIC
10. SUPPLY AND DRAIN UNITS: GUY GRAY, ACORN
11. SHOWER / BATHTUB ENCLOSURES: KOHLER, AMERICAN STANDARD, ZURN

PLUMBING EQUIPMENT SCHEDULE

ITEM	FIXTURE	DESCRIPTION	ELECTRICAL
WH-1	DOMESTIC WATER HEATER	A.O. SMITH ENT-40D, 40 GALLON STORAGE CAPACITY, UL LISTED, GLASS-LINED TANK, OPERATING PRESSURE OF 150 PSI, STAINLESS STEEL WATER CONNECTION.	6.0 KW, 240 VOLT, SINGLE PHASE
WH-2	DOMESTIC WATER HEATER	A.O. SMITH DEL-6S, 6 GALLON STORAGE CAPACITY, UL LISTED, OPERATING PRESSURE OF 150 PSI.	3.0 KW, 240 VOLT, SINGLE PHASE
ET-1	EXPANSION TANK	AMTROL MODEL ST-5, THERMAL EXPANSION TANK, 2.0 GALLON CAPACITY, MAXIMUM WORKING PRESSURE 150 PSI, STAINLESS STEEL WATER CONNECTION.	NONE
HWRP-1	RECIRC. PUMP	GRUNDFOS 10-16 COMFORT PM, INLINE CENTRIFUGAL, BRONZE CONSTRUCTION, 2 GPM AT 4 FEET OF HEAD. PROVIDED WITH TEMPERATURE SENSORS. THREE MODES OF OPERATION: 100%, AUTOADAPT, AND TEMPERATURE MODE. CONTRACTOR TO SET PUMP TO AUTOADAPT MODE.	1/12 HP, 120 VOLT, SINGLE PHASE
WM-1	WATER METER	XYLEM OMNI+, 1-1/2" WATER METER, DUCTILE IRON WITH EPOXY COATING, OPERATING RANGE: 0.75 GPM TO 150 GPM. EACH RESIDENCE IS TO BE PROVIDED WITH 1 OMNI+ ELECTRONIC REGISTER SYSTEM. REFER TO ELECTRICAL SINGLE LINE FOR FURTHER DETAILS.	12-24 VDC BATTERY

APPOVED MANUFACTURERS

1. ELECTRIC WATER HEATERS (SMALL TANK): LOCHINVAR, A.O. SMITH, RHEEM, BRADFORD WHITE
2. HOT WATER CIRCULATORS: BELL AND GOSSETT, GRUNDFOS, TACO, ARMSTRONG

JSRa
JOHNSON SMITTHIPONG & ROSAMOND ASSOCIATES, INC.
5210 E Williams Cir • Ste 600 • Tucson, AZ 85711 •
(520) 547-7904 www.jsrarchinc.com

Consultants:

Bernhard TME Engineering
2990 N. Swan Road
Suite 227
Tucson, Arizona 85712
Phone: (520) 323-2381
tme@bernhardtme.com

ISSUED FOR INTERIM REVIEW
THIS DOCUMENT IS NOT TO BE USED FOR REGULATORY APPROVAL, PERMIT, OR CONSTRUCTION
Vernon Rosamond
Arizona Lic #: 9793
Date: 8/13/24

iHOUSE APARTMENTS

Tonalea, AZ 86044

U. S. DEPARTMENT OF HEALTH AND HUMAN SERVICES
INDIAN HEALTH SERVICE
DIVISION OF ENGINEERING SERVICES
SEATTLE / DALLAS

No.	Date	Description

Issue Date:	8/13/24
Project No:	23-390
Scale:	1/8" = 1'-0"
Drawn By:	Author
Checked By:	Checker

PHASE IV (Final CD)

Sheet Title:

SCHEDULES - PLUMBING

Sheet Number:

P002

Autodesk Docs://23-390 IHS iHouse Apt v2023i05-24-0004-BTME MEPF-RVT23.rvt
8/12/2024 3:54:37 PM

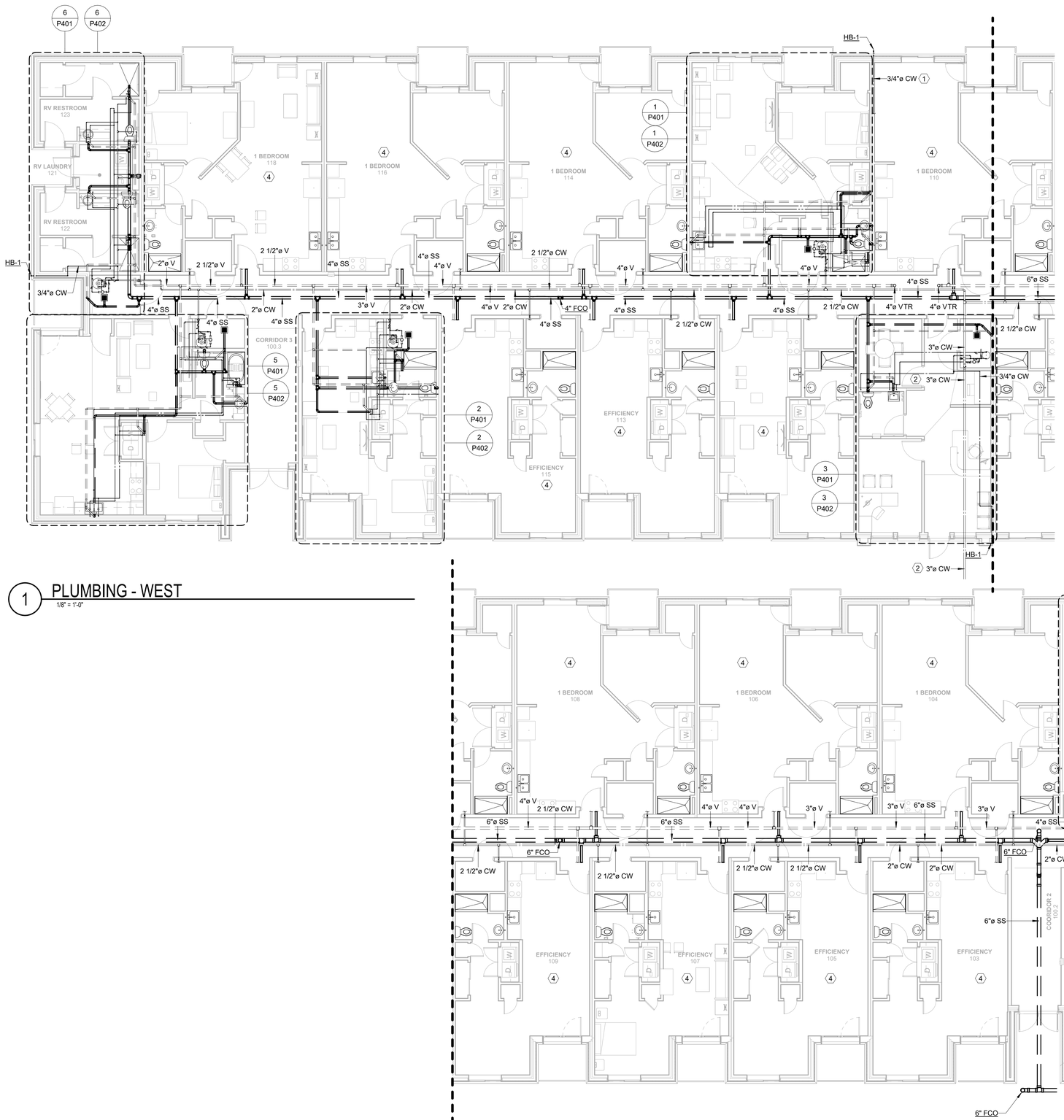

1 PLUMBING - WEST
1/8" = 1'-0"

2 PLUMBING - EAST
1/8" = 1'-0"

KEYED NOTES:

1. CONNECT 3/4" COLD WATER PIPE SERVING HB-1 TO NEAREST COLD WATER BRANCH 3/4" OR GREATER.
2. 3" COLD WATER MAIN UNDERGROUND TO CIVIL.
3. 6" SEWER MAIN TO CIVIL.
4. REFER TO M401 AND M402 FOR UNIT PLUMBING DISTRIBUTION.

JSRa
JOHNSON SMITTHIPONG & ROSAMOND ASSOCIATES, INC.
5210 E Williams Cir • Ste 600 • Tucson, AZ 85711 •
(520) 547-7904 www.jsrarchinc.com

Consultants:

Bernhard TME Engineering
2990 N. Swan Road
Suite 227
Tucson, Arizona 85712
Phone: (520) 323-2381
tme@bernhardtme.com

ISSUED FOR INTERIM REVIEW
THIS DOCUMENT IS NOT TO BE USED FOR REGULATORY APPROVAL, PERMIT, OR CONSTRUCTION
Vernon Rosamond
Arizona Lic #: 9793
Date: 8/13/24

iHOUSE APARTMENTS

Tonalea, AZ 86044

U. S. DEPARTMENT OF HEALTH AND HUMAN SERVICES
INDIAN HEALTH SERVICE
DIVISION OF ENGINEERING SERVICES
SEATTLE / DALLAS

No.	Date	Description

Issue Date:	8/13/24
Project No:	23-390
Scale:	1/8" = 1'-0"
Drawn By:	Author
Checked By:	Checker

PHASE IV (Final CD)

Sheet Title:

FIRST FLOOR PLAN - PLUMBING

Sheet Number:

P201

Autodesk Docs://23-390 IHS iHouse Apt v2023/05-24-0004-BTME MEPF-RVT23.rvt
8/12/2024 3:54:40 PM

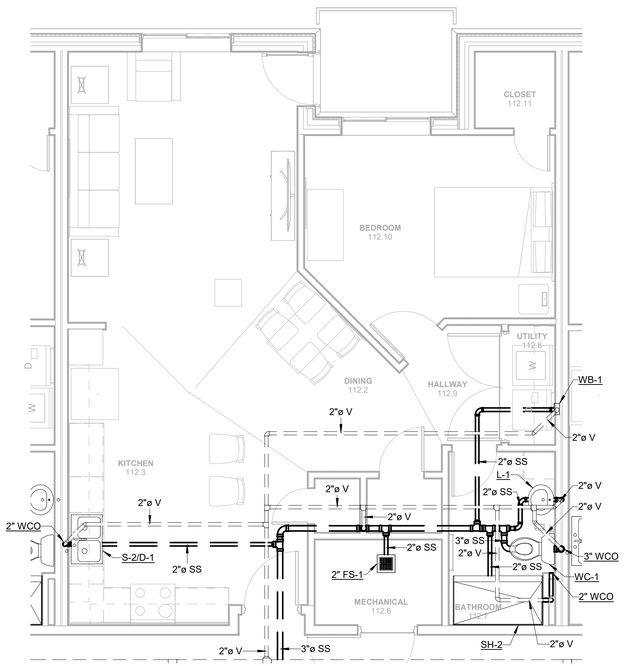

1 PLUMBING SANITARY - 1 BEDROOM APARTMENT

1/4" = 1'-0"

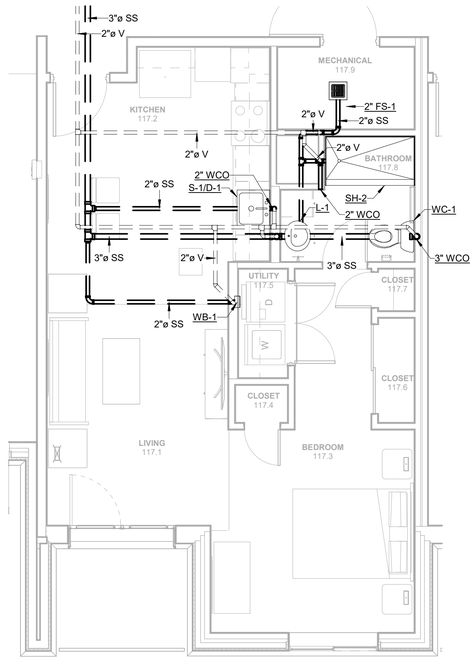

2 PLUMBING SANITARY - EFFICIENCY APARTMENT

1/4" = 1'-0"

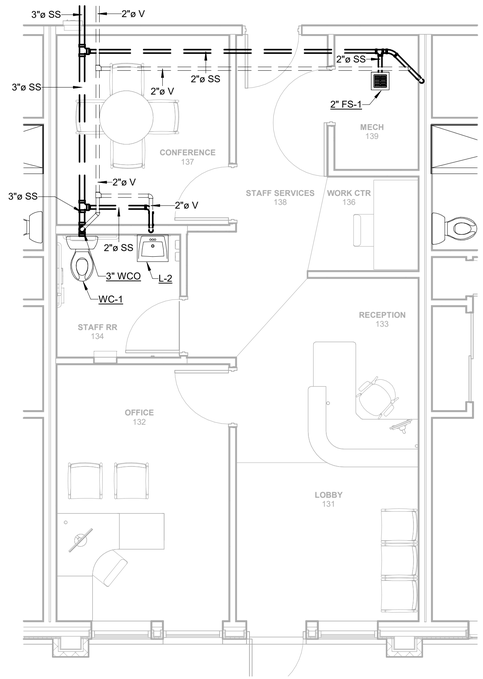

3 PLUMBING SANITARY - STAFF OFFICE

1/4" = 1'-0"

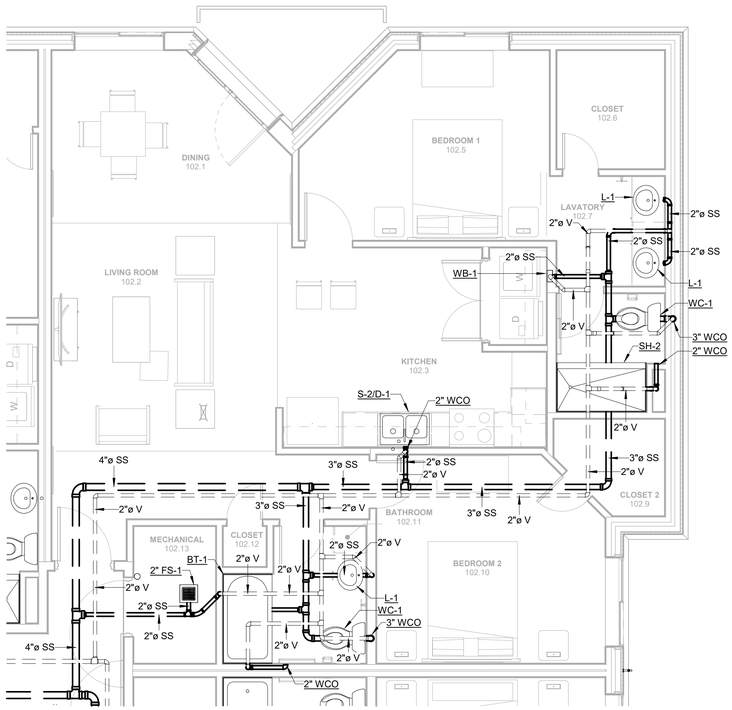

4 PLUMBING SANITARY - 2 BEDROOM APARTMENT

1/4" = 1'-0"

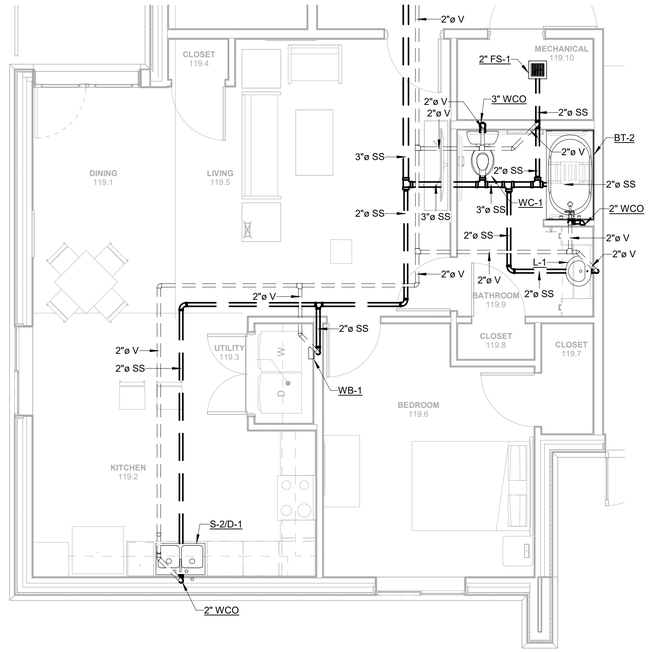

5 PLUMBING SANITARY - 1 BEDROOM ADA APARTMENT

1/4" = 1'-0"

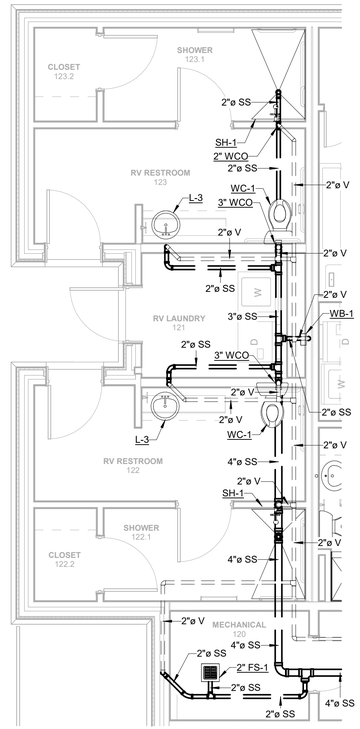

6 PLUMBING SANITARY - RV RESTROOMS

1/4" = 1'-0"

GENERAL NOTES:

A. WALL CLEANOUTS AT TOILETS SHALL BE LOCATED 12 INCHES ABOVE WATER CLOSET TANK.

JOHNSON SMITTHIPONG & ROSAMOND ASSOCIATES, INC.

5210 E Williams Cir • Ste 600 • Tucson, AZ 85711 •
(520) 547-7904 www.jsrarchinc.com

Consultants:

Bernhard TME Engineering
2990 N. Swan Road
Suite 227
Tucson, Arizona 85712
Phone: (520) 323-2381
tme@bernhardtme.com

ISSUED FOR INTERIM REVIEW

THIS DOCUMENT IS NOT TO BE USED FOR REGULATORY APPROVAL, PERMIT, OR CONSTRUCTION

Vernon Rosamond
Arizona Lic #: 9793
Date: 8/13/24

iHOUSE APARTMENTS

Tonalea, AZ 86044

U. S. DEPARTMENT OF HEALTH AND HUMAN SERVICES
INDIAN HEALTH SERVICE
DIVISION OF ENGINEERING SERVICES
SEATTLE / DALLAS

No.	Date	Description

Issue Date:	8/13/24
Project No:	23-390
Scale:	1/4" = 1'-0"
Drawn By:	Author
Checked By:	Checker

PHASE IV (Final CD)

Sheet Title:

PARTIAL FLOOR PLANS - PLUMBING SANITARY

Sheet Number:

P401

Autodesk Docs://23-390 IHS iHouse Apt v2023i05-24-0004-BTME MEPF-RVT23.rvt
8/12/2024 3:54:41 PM

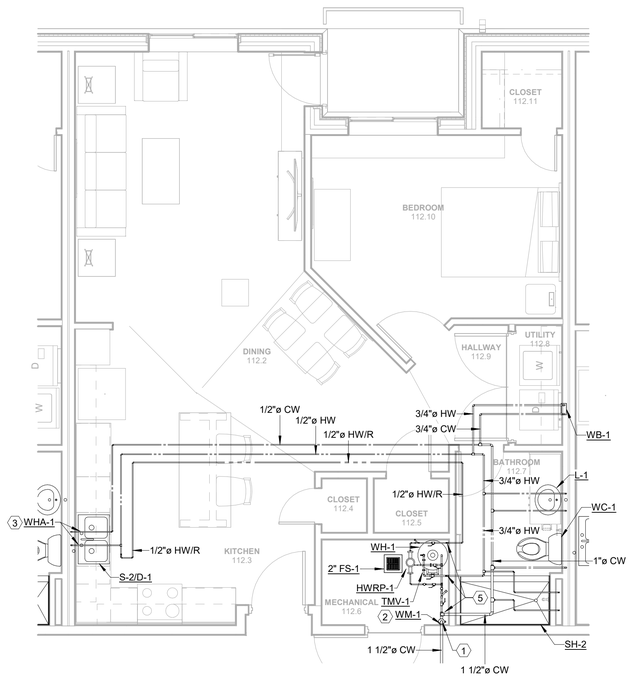

1 PLUMBING DOMESTIC - 1 BEDROOM APARTMENT

1/4" = 1'-0"

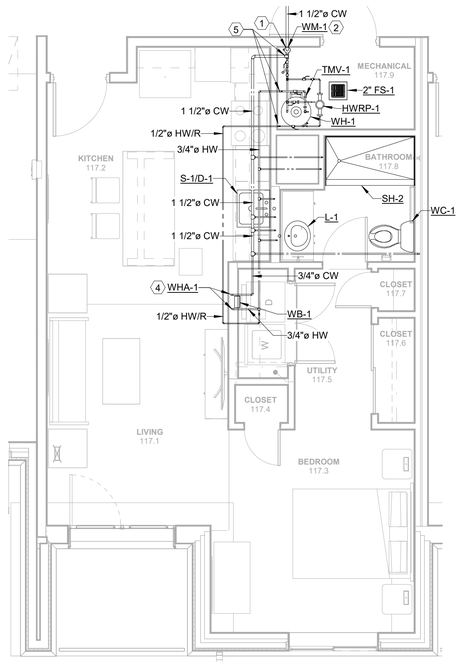

2 PLUMBING DOMESTIC - EFFICIENCY APARTMENT

1/4" = 1'-0"

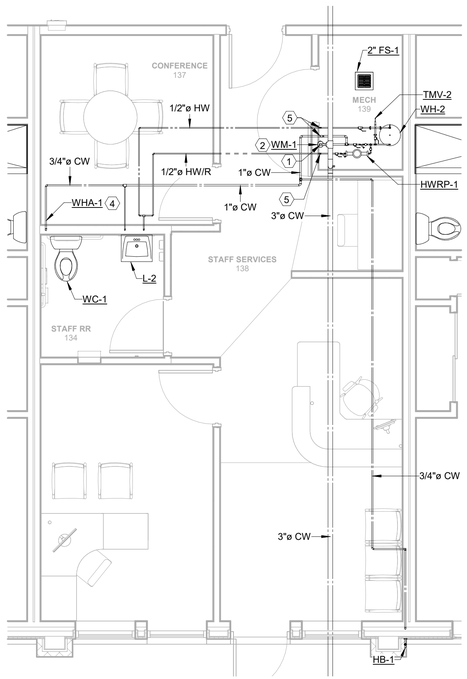

3 PLUMBING DOMESTIC - STAFF OFFICE

1/4" = 1'-0"

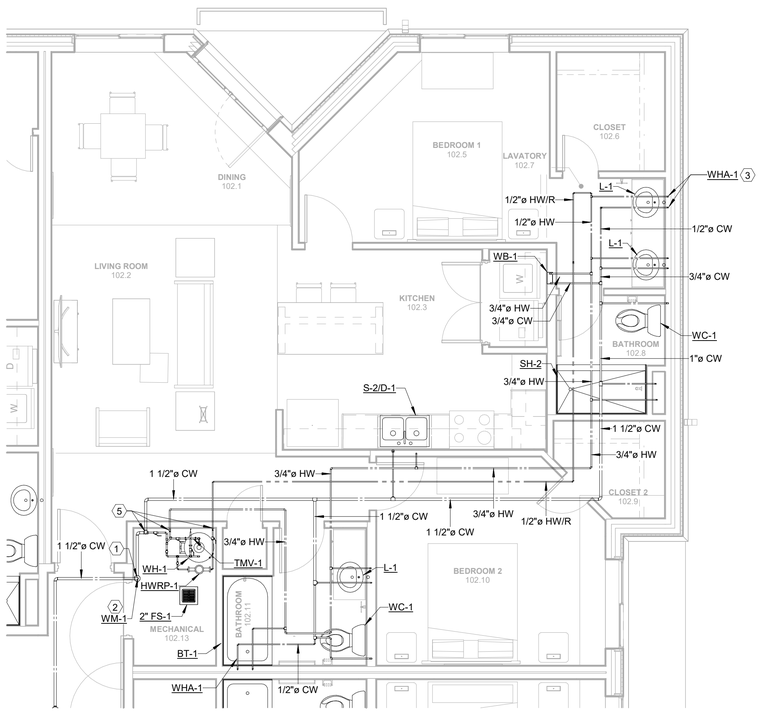

4 PLUMBING DOMESTIC - 2 BEDROOM APARTMENT

1/4" = 1'-0"

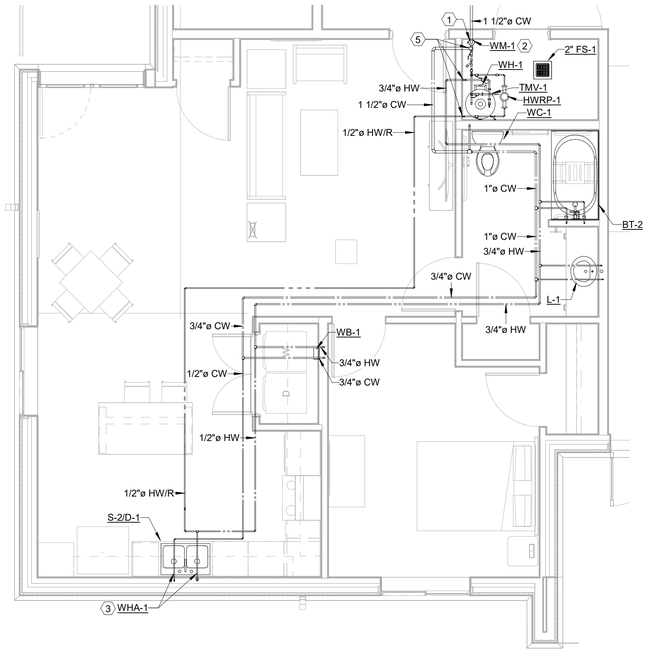

5 PLUMBING DOMESTIC - 1 BEDROOM ADA APARTMENT

1/4" = 1'-0"

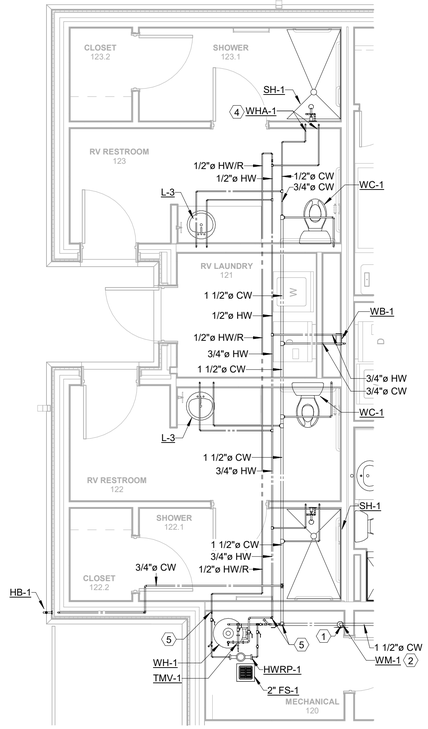

6 PLUMBING DOMESTIC - RV RESTROOMS

1/4" = 1'-0"

GENERAL NOTES:

A. REFER TO PLUMBING RISERS FOR FURTHER INFORMATION.
B. COORDINATE FINAL LOCATION OF FLOOR SINK WITH ALL MECHANICAL AND PLUMBING EQUIPMENT TO MINIMIZE TRIP HAZARD.

KEYED NOTES:

1. DROP COLD WATER PIPE TO ENTER MECHNICAL ROOM BELOW CEILING. ALL SHUTTOFF VALVES IN MECHANICAL ROOM ARE TO BE BELOW CEILING.
2. WATER METER (WM-1) SHALL BE INSTALLED ON THE COLD WATER MAIN ENTERING THE MECHANICAL ROOM.
3. INSTALL WATER HAMMER ARRESTOR (WHA-1) IN WALL BELOW COUNTER WITH A 6" X 6" ACESS PANEL.
4. INSTALL WATER HAMMER ARRESTOR (WHA-1) IN WITH A 6" X 6" ACESS PANEL.
5. PIPE UP TO ATTIC SPACE.

JSRa
JOHNSON SMITTHIPONG & ROSAMOND ASSOCIATES, INC.
5210 E Williams Cir • Ste 600 • Tucson, AZ 85711 •
(520) 547-7904 www.jsrarchinc.com

Consultants:

Bernhard TME Engineering
2990 N. Swan Road
Suite 227
Tucson, Arizona 85712
Phone: (520) 323-2381
tme@bernhardtme.com

ISSUED FOR INTERIM REVIEW

THIS DOCUMENT IS NOT TO BE USED FOR REGULATORY APPROVAL, PERMIT, OR CONSTRUCTION

Vernon Rosamond
Arizona Lic #: 9793
Date: 8/13/24

iHOUSE APARTMENTS

Tonalea, AZ 86044

U. S. DEPARTMENT OF HEALTH AND HUMAN SERVICES
INDIAN HEALTH SERVICE
DIVISION OF ENGINEERING SERVICES
SEATTLE / DALLAS

No.	Date	Description

Issue Date:	8/13/24
Project No:	23-390
Scale:	1/4" = 1'-0"
Drawn By:	Author
Checked By:	Checker

PHASE IV (Final CD)

Sheet Title:

PARTIAL FLOOR PLANS - PLUMBING DOMESTIC

Sheet Number:

P402

Autodesk Docs://23-390 IHS iHouse Apt v2023i05-24-0004-BTME MEPF-RVT23.rvt
8/12/2024 3:54:42 PM

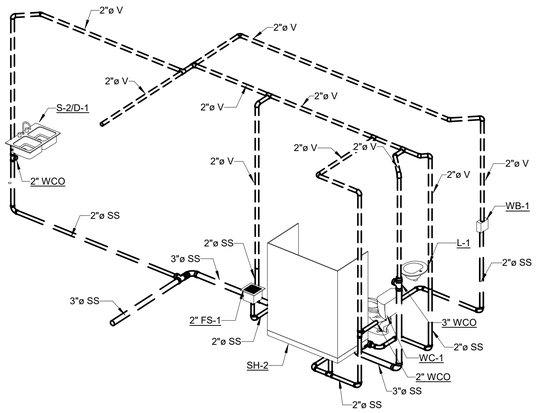

1 PLUMBING SANITARY RISER - 1 BEDROOM APARTMENT

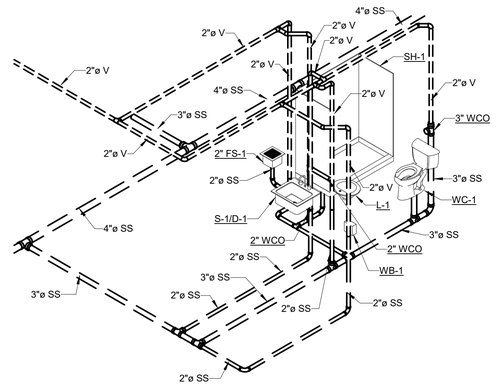

2 PLUMBING SANITARY RISER - EFFICIENCY APARMENT

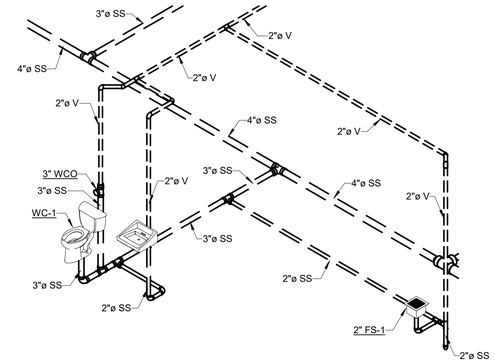

3 PLUMBING SANITARY RISER - STAFF OFFICE

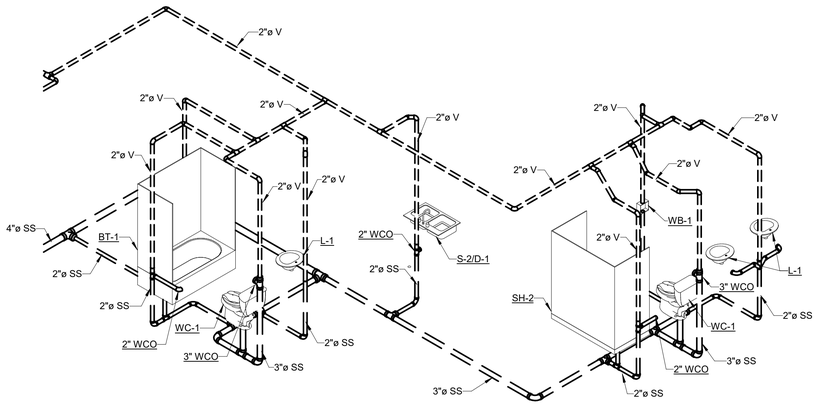

4 PLUMBING SANITARY RISER - 2 BEDROOM APARTMENT

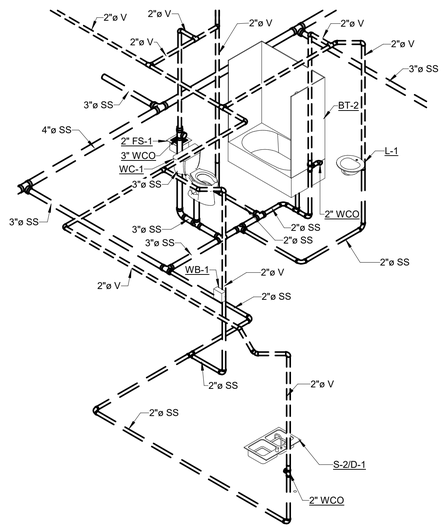

5 PLUMBING SANITARY RISER - 1 BEDROOM ADA APARTMENT

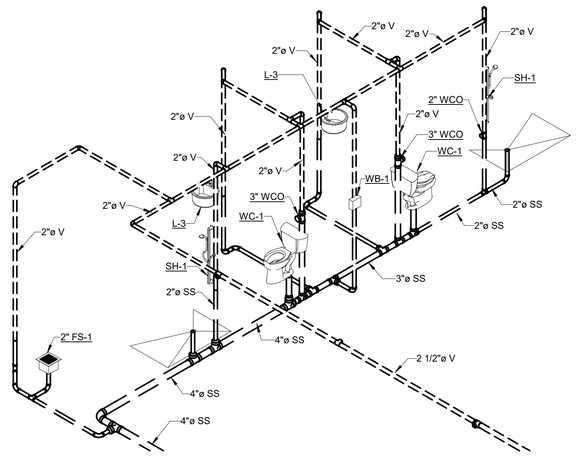

6 PLUMBING SANITARY RISER - RV RESTROOMS

JSRa
JOHNSON SMITTHIPONG & ROSAMOND ASSOCIATES, INC.
5210 E Williams Cir • Ste 600 • Tucson, AZ 85711 •
(520) 547-7904 www.jsrarchinc.com

Consultants:

Bernhard TME Engineering
2990 N. Swan Road
Suite 227
Tucson, Arizona 85712
Phone: (520) 323-2381
tme@bernhardtme.com

ISSUED FOR INTERIM REVIEW
THIS DOCUMENT IS NOT TO BE USED FOR REGULATORY APPROVAL, PERMIT, OR CONSTRUCTION
Vernon Rosamond
Arizona Lic #: 9793
Date: 8/13/24

iHOUSE APARTMENTS

Tonalea, AZ 86044

U. S. DEPARTMENT OF HEALTH AND HUMAN SERVICES
INDIAN HEALTH SERVICE
DIVISION OF ENGINEERING SERVICES
SEATTLE / DALLAS

No.	Date	Description

Issue Date:	8/13/24
Project No:	23-390
Scale:	
Drawn By:	Author
Checked By:	Checker

PHASE IV (Final CD)

Sheet Title:

RISERS - PLUMBING SANITARY

Sheet Number:

P501

Autodesk Docs://23-390 IHS iHouse Apt v2023\05-24-0004-BTME MEPF-RV723.rvt
8/12/2024 3:54:43 PM

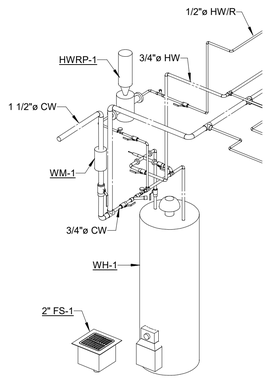

1 PLUMBING DOMESTIC RISER - 1 BEDROOM APARTMENT

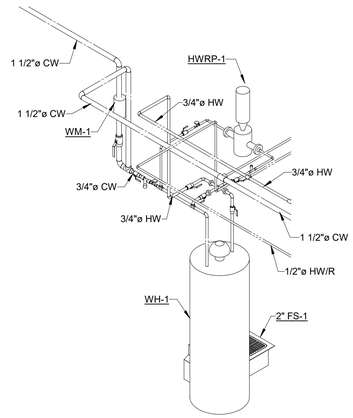

2 PLUMBING DOMESTIC RISER - EFFICIENCY APARMENT

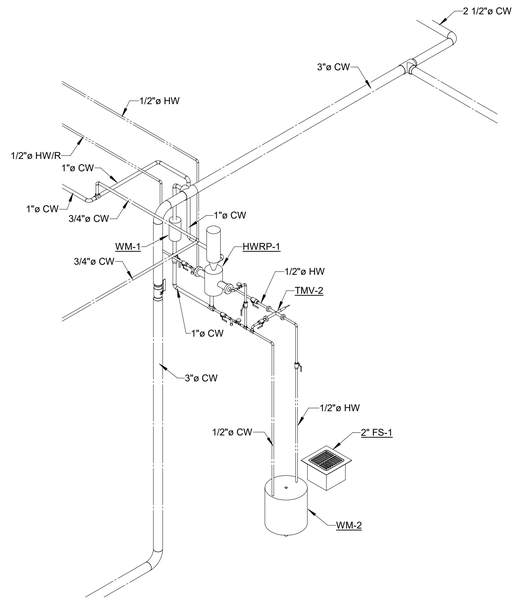

3 PLUMBING DOMESTIC RISER - STAFF OFFICE

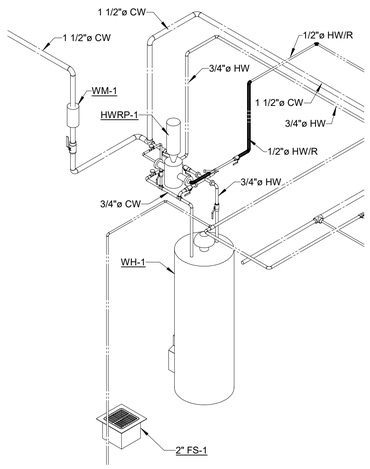

4 PLUMBING DOMESTIC RISER - 2 BEDROOM APARTMENT

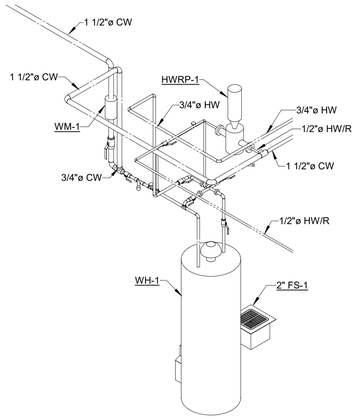

5 PLUMBING DOMESTIC RISER - 1 BEDROOM ADA APARTMENT

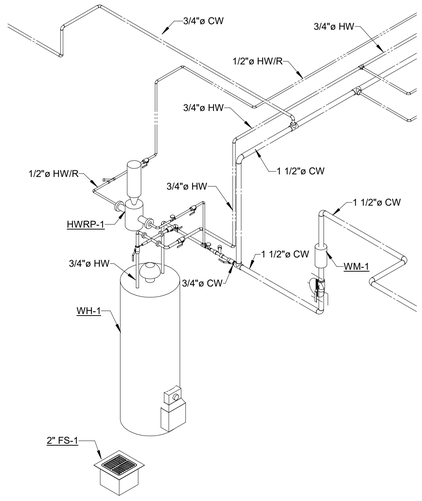

6 PLUMBING DOMESTIC RISER - RV RESTROOMS

JSRa
JOHNSON SMITTHIPONG & ROSAMOND ASSOCIATES, INC.
5210 E Williams Cir • Ste 600 • Tucson, AZ 85711 •
(520) 547-7904 www.jsrarchinc.com

Consultants:

Bernhard TME Engineering
2990 N. Swan Road
Suite 227
Tucson, Arizona 85712
Phone: (520) 323-2381
tme@bernhardtme.com

ISSUED FOR INTERIM REVIEW
THIS DOCUMENT IS NOT TO BE USED FOR REGULATORY APPROVAL, PERMIT, OR CONSTRUCTION
Vernon Rosamond
Arizona Lic #: 9793
Date: 8/13/24

iHOUSE APARTMENTS

Tonalea, AZ 86044

U. S. DEPARTMENT OF HEALTH AND HUMAN SERVICES
INDIAN HEALTH SERVICE
DIVISION OF ENGINEERING SERVICES
SEATTLE / DALLAS

No.	Date	Description

Issue Date:	8/13/24
Project No:	23-390
Scale:	
Drawn By:	Author
Checked By:	Checker

PHASE IV (Final CD)

Sheet Title:

RISERS - PLUMBING DOMESTIC MECHANICAL ROOMS

Sheet Number:

P502

Autodesk Docs://23-390 IHS iHouse Apt v2023\05-24-0004-BTME MEPF-RV723.rvt
8/12/2024 3:54:44 PM

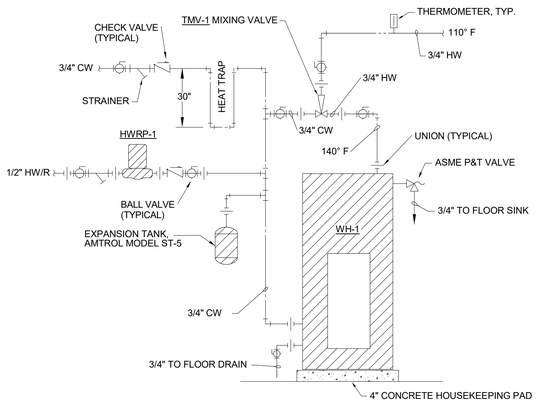

1 WATER HEATER DETAIL (WH-1)
SCALE: NONE

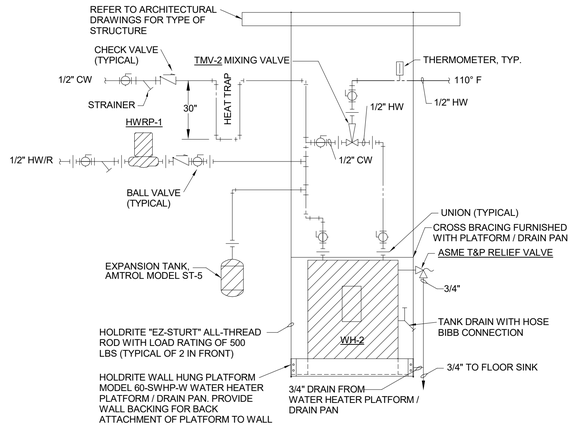

2 WATER HEATER DETAIL (WH-2)
SCALE: NONE

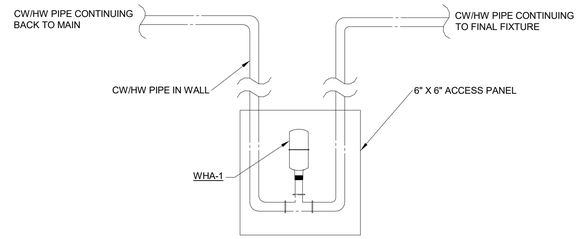

3 WATER HAMMER ARRESTOR BOX IN WALL DETAIL
SCALE: NONE

JSRa
JOHNSON SMITTHIPONG & ROSAMOND ASSOCIATES, INC.
5210 E Williams Cir • Ste 600 • Tucson, AZ 85711 •
(520) 547-7904 www.jsrarchinc.com

Consultants:

Bernhard TME Engineering
2990 N. Swan Road
Suite 227
Tucson, Arizona 85712
Phone: (520) 323-2381
tme@bernhardtme.com

ISSUED FOR INTERIM REVIEW
THIS DOCUMENT IS NOT TO BE USED FOR REGULATORY APPROVAL, PERMIT, OR CONSTRUCTION
Vernon Rosamond
Arizona Lic #: 9793
Date: 8/13/24

iHOUSE APARTMENTS

Tonalea, AZ 86044

U. S. DEPARTMENT OF HEALTH AND HUMAN SERVICES
INDIAN HEALTH SERVICE
DIVISION OF ENGINEERING SERVICES
SEATTLE / DALLAS

No.	Date	Description

Issue Date:	8/13/24
Project No:	23-390
Scale:	1/8" = 1'-0"
Drawn By:	Author
Checked By:	Checker

PHASE IV (Final CD)

Sheet Title:

DETAILS - PLUMBING

Sheet Number:

P601

Autodesk Docs://23-390 IHS iHouse Apt v2023\05-24-0004-BTME MEPF-RV723.rvt
8/12/2024 3:54:44 PM

ONE LINE PIPE SYMBOLS

D	CONDENSATE DRAIN
	ELBOW, TURNED UP
	ELBOW, TURNED DOWN
	RISE OR DROP IN PIPE
	ELBOW
	TEE, SIDE CONNECTION
	TEE, OUTLET UP
	TEE, OUTLET DOWN
	CAPPED OUTLET
	CAPPED PIPE
	CONCENTRIC REDUCER
	ECCENTRIC REDUCER
	DIRECTION OF PITCH
TFD	PIPE TO FLOOR DRAIN

TWO LINE PIPE SYMBOLS

	ELBOW - FLANGED LONG RADIUS 45°
	ELBOW - FLANGED LONG RADIUS 90°
	ELBOW - WELDED LONG RADIUS 45°
	ELBOW - WELDED LONG RADIUS 90°
	END CAP
	REDUCERS - FLANGED CONCENTRIC
	REDUCERS - FLANGED ECCENTRIC
	REDUCERS - WELDED CONCENTRIC
	REDUCERS - WELDED ECCENTRIC
	TEE - FLANGED
	TEE - WELDED
	BUTTERFLY VALVE - LEVER OPERATOR

DUCTWORK SYMBOLS

T	THERMOSTAT
	THERMOSTAT WIRING
SA	SUPPLY AIR DUCT
RA	RETURN AIR DUCT
EA	EXHAUST AIR DUCT
CFM	CUBIC FEET PER MINUTE
Ø	ROUND DIAMETER
	SHORT (1x) RADIUS ELL (RECTANGULAR OR ROUND) CENTERLINE RADIUS = 1d
	LONG (1.5x) RADIUS ELL (ROUND OR OVAL) CENTERLINE RADIUS = 1.5d
	ELL WITH TURNING VANES
	STREAMLINE TAP (RECTANGULAR)
Ø	STREAMLINE TAP (ROUND)
	LATERAL TAP
	MANUAL VOLUME DAMPER
M	MOTORIZED VOLUME DAMPER
FD	FIRE DAMPER (FD)
S	SMOKE DAMPER
S FD/S	COMBINATION FIRE / SMOKE DAMPER (FD/S)
20/12	RECTANGULAR DUCT (WIDTH/DEPTH)
	ROUND DUCT OFFSET
RISE	CHANGE IN ELEVATION ("R"-RISE, "F"-FALL)
	FLEXIBLE DUCT
	SUPPLY DUCT UP
	RETURN DUCT UP
	EXHAUST DUCT UP
	SUPPLY DUCT DOWN
	RETURN DUCT DOWN
	EXHAUST DUCT DOWN
	CEILING DIFFUSER
	RETURN AIR GRILLE
	EXHAUST AIR GRILLE
AP	ACCESS PANEL
X- 000	TYPE - AIRFLOW

JSRa
JOHNSON SMITTHIPONG & ROSAMOND ASSOCIATES, INC.
5210 E Williams Cir • Ste 600 • Tucson, AZ 85711 •
(520) 547-7904 www.jsrarchinc.com

Consultants:

Bernhard TME Engineering
2990 N. Swan Road
Suite 227
Tucson, Arizona 85712
Phone: (520) 323-2381
tme@bernhardtme.com

ISSUED FOR INTERIM REVIEW
THIS DOCUMENT IS NOT TO BE USED FOR REGULATORY APPROVAL, PERMIT, OR CONSTRUCTION
Vernon Rosamond
Arizona Lic #: 9793
Date: 8/13/24

iHOUSE APARTMENTS

Tonalea, AZ 86044

U. S. DEPARTMENT OF HEALTH AND HUMAN SERVICES
INDIAN HEALTH SERVICE
DIVISION OF ENGINEERING SERVICES
SEATTLE / DALLAS

No.	Date	Description

Issue Date:	8/13/24
Project No:	23-390
Scale:	1/8" = 1'-0"
Drawn By:	Author
Checked By:	Checker

PHASE IV (Final CD)

Sheet Title:

SCHEDULES AND LEGEND - HVAC

Sheet Number:

M001

Autodesk Docs://23-390 IHS iHouse Apt v2023/05-24-0004-BTME MEPF-RVT23.rvt
8/12/2024 5:06:00 PM

CONDENSING UNITS

DESIGNATION	REFERENCE PRODUCT	TYPE	SERVES	REFRIGERANT TYPE	COOLING: SENSIBLE/TOTAL CAPACITY (MBH)	COOLING: AMBIENT AIR TEMPERATURE (°F)	COOLING: MINIMUM SEER	HEATING: TOTAL CAPACITY AT 17F (MBH)	HEATING: AMBIENT AIR TEMPERATURE (°F)	HEATING: HSPF2	ELECTRICAL: VOLTS / PHASE	ELECTRICAL: MINIMUM CIRCUIT AMPS	WEIGHT (LBS)	DIMENSIONS (W"xD"xH")	REMARKS
CU-1	YORK/FRASER-JOHNSTON HL20B3621S	HEAT PUMP	AHU-1	R-410-A	33 / 28.2	95	19.5	26.5	17	8.5	208-230 / 1	25.7	259	37" x 34" x 44"	PROVIDE WITH DIVERSITECH HPR-6 HEAT PUMP RISERS. ACCESSORY AS RECOMMENDED BY MANUFACTURED FOR LOW AMBIENT HEATING (12 F)
CU-2	YORK/FRASER-JOHNSTON HL20B2421S	HEAT PUMP	AHU-2	R-410-A	23.3 / 14.2	95	19	16.7	17	8.5	208-230 / 1	17.7	242	37" x 34" x 44"	PROVIDE WITH DIVERSITECH HPR-6 HEAT PUMP RISERS. ACCESSORY AS RECOMMENDED BY MANUFACTURED FOR LOW AMBIENT HEATING (12 F)
CU-3	LG LVU120HCV	HEAT PUMP	AHU-3	R-410-A	9.6 / 12.0	95	16	14.0	17	9..3	208-230 / 1	13.8	100	34-1/4" x 14-9/16" x 25-19/32"	PROVIDE WITH 18" STAND.

AIR HANDLERS

DESIGNATION	REFERENCE PRODUCT	TYPE	MAX AIR FLOW RATE (CFM)	MAX EXTERNAL PRESSURE (IN. WATER)	FILTER TYPE	COOLING: SENSIBLE/TOTAL CAPACITY (MBH)	COOLING: AIR EDB / EWB (°F)	COOLING: AIR LDB / LWB (°F)	HEATING: TOTAL CAPACITY AT 17F (MBH)	HEATING: AIR EDB / EWB (°F)	HEATING: AIR LDB / LWB (°F)	ELECTRICAL: VOLTS / PHASE	ELECTRICAL: MINIMUM CIRCUIT	WEIGHT (LBS)	DIMENSIONS (W"xD"xH")	REMARKS
AHU-1	YORK/FRASER-JOHNSTON JHVVB36DE2C2N1	MULTI - POSITION	1,320	0.5	MERV 8	33 / 28.2	77 / 62	53.5 / 53.5	26.5	70 / 60	92	230 / 1	4.8	103	26" x 15" x 56"	PROVIDE WITH S1-THSU303-S THERMOSTAT, FILTER RACK FOR 2" MERV 8 FILTER, AND FACTORY PROVIDED AND INSTALLED DISCONNECT.
AHU-2	YORK/FRASER-JOHNSTON JHVVB24DE1C2N1	MULTI - POSITION	880	0.5	MERV 8	14.2 / 23.3	77 / 62	53.5 / 53.5	16.7	70 / 60	92	230 / 1	3.3	103	26" x 15" x 56"	PROVIDE WITH S1-THSU303-S THERMOSTAT, FILTER RACK FOR 2" MERV 8 FILTER, AND FACTORY PROVIDED AND INSTALLED DISCONNECT.
AHU-3	LG LVN120HCV	MULTI - POSITION	580	0.8	MERV 8	9.6 / 12.0	77 / 62	53.5 / 53.5	15.0	70 / 60	92	POWERED BY OUTDOOR UNIT		117	18" x 20-13/32" x 49-3/8"	PROVIDE WITH PREMTB100 STANDARD III WIRED THERMOSTAT, FILTER BOX FOR 2" MERV 8 FILTER, AND FACTORY PROVIDED AND INSTALLED DISCONNECT.

EXHAUST FANS

DESIGNATION	REFERENCE PRODUCT	TYPE	SERVES	AIR FLOW RATE (CFM)	TOTAL STATIC PRESSURE (IN. WATER)	FAN ROTATION (RPM)	DRIVE	SONES	MOTOR SIZE: MHP	ELECTRICAL: VOLTS	ELECTRICAL: PHASE	REMARKS
EF-1	GREENHECK SP-A110	CEILING MOUNTED	BATHROOMS	100	0.199	950	DIRECT	0.5	16 WATTS	115	1	PROVIDE AS ENERGY STAR RATED, MOTOR RATED FOR CONTINUOUS USE, ROUND DUCT CONNECTOR, ALUMINUM GRILLE WITH WHITE ENAMEL FINISH, ALUMINUM WHEEL.

AIR DISTRIBUTION DEVICES

DESIGNATION SUPPLY X - Y CFM

RETURN OR EXHAUST X - Y DESIGNATION CFM

DESIGNATION	REFERENCE PRODUCT	TYPE	MAXIMUM AIR FLOW (CFM)	TOTAL PRESSURE (IN. WATER)	NECK SIZE (IN.)	PANEL SIZE (IN x IN)	MAX N.C.	FINISH	REMARKS
A	TITUS TMS	SUPPLY	196	0.114	6"Ø	12"x12"	30	OFF-WHITE	PROVIDE WITH OPPOSED BLADE DAMPER AT DIFFUSER NECK FOR BELOW CEILING ACCESS TO DAMPER FOR ADJUSTING
B	TITUS TMS	SUPPLY	349	0.140	8"Ø	12"x12"	30	OFF-WHITE	
C	TITUS TMS	SUPPLY	545	0.103	10" Ø	24"x24"	30	OFF-WHITE	
1	TITUS 45F	RETURN	1600	0.03	48"x22"	48"x24"	30	OFF-WHITE	
2	TITUS 45F	RETURN	222	0.102	8"x8"	12"x12"	30	OFF-WHITE	
3	TITUS 25RL	EXHAUST	133	0.126	6"x6"	6"x6"	30	OFF-WHITE	
4	TITUS 25RL	EXHAUST	288	0.092	20x4"	20"x4"	30	OFF-WHITE	
5	TITUS 45F	RETURN	347	0.102	10"x10"	12"x12"	30	OFF-WHITE	
6	TITUS 45F	RETURN	450	0.082	12"x12"	24"x24"	30	OFF-WHITE	

NOTE 1: CONTRACTOR SHALL VERIFY ALL CEILING FOR APPROPRIATE FRAME TYPE.
NOTE 2: CONTRACTOR SHALL FURNISH AND INSTALL ANY TRANSITIONS TO DIFFUSER/GRILLE NECK SIZE AS REQUIRED.

MECHANICAL SCHEDULE

ITEM	FIXTURE	DESCRIPTION	ELECTRICAL
EV-1	EAVE VENT	BUILDER'S BEST ALUMINUM EAVE VENT TO BE INSTALLED FLUSH TO EAVE. AEV324 FOR EXHAUST FAN OUTLETS. AEV320 FOR DRYER VENT INCLUSIVE OF FLAPPER. (CONTRACTOR TO INSTALL ADDITIONAL INSECT SCREEN FOR EXHAUST FAN OUTLETS.) PAINT TO MATCH EAVE.	N/A
EH-1	ELECTRIC HEATER	BROAN 194, HIGH CAPACITY WALL HEATER, 10,240 BTU/HR HEATING OUTPUT, WHITE GRILLE, FRONT MOUNTED THERMOSTAT, 22 GAUGE HOUSING, RECESS MOUNTED. PROVIDE AS SURFACE MOUNT AT ARCHITECTS REQUEST ONLY. DIMENSIONS: 20" H x 16.25" W x 4.25" D. 23 LBS.	240 V, 3000 W, 12.5 A
DOB-1	DRYER OUTLET BOX	BUILDER'S BEST DRYER OUTLET BOX KIT MODEL# PNT11001 INCLUSIVE OF OUTLET BOX. ALUMINUM PERISCOPE IN WALL DUCT UP TO 10 FEET CEILINGS AND RECTANGLE TO ROUND ADAPTERS. PROVIDE FANTECH DBLT4W LINT TRAP IN DRYER VENT DUCT IN THE WALL ABOVE CLOTHES DRYER.	N/A

JSRa
JOHNSON SMITTHIPONG & ROSAMOND ASSOCIATES, INC.
5210 E Williams Cir • Ste 600 • Tucson, AZ 85711 •
(520) 547-7904 www.jsrarchinc.com

Consultants:

Bernhard TME Engineering
2990 N. Swan Road
Suite 227
Tucson, Arizona 85712
Phone: (520) 323-2381
tme@bernhardtme.com

ISSUED FOR INTERIM REVIEW
THIS DOCUMENT IS NOT TO BE USED FOR REGULATORY APPROVAL, PERMIT, OR CONSTRUCTION
Vernon Rosamond
Arizona Lic #: 9793
Date: 8/13/24

iHOUSE APARTMENTS

Tonalea, AZ 86044

U. S. DEPARTMENT OF HEALTH AND HUMAN SERVICES
INDIAN HEALTH SERVICE
DIVISION OF ENGINEERING SERVICES
SEATTLE / DALLAS

No.	Date	Description

Issue Date:	8/13/24
Project No:	23-390
Scale:	1/8" = 1'-0"
Drawn By:	Author
Checked By:	Checker

PHASE IV (Final CD)

Sheet Title:

SCHEDULES - HVAC

Sheet Number:

M002

Autodesk Docs://23-390 IHS iHouse Apt v2023/05-24-0004-BTME MEPF-RVT23.rvt
8/12/2024 5:06:01 PM

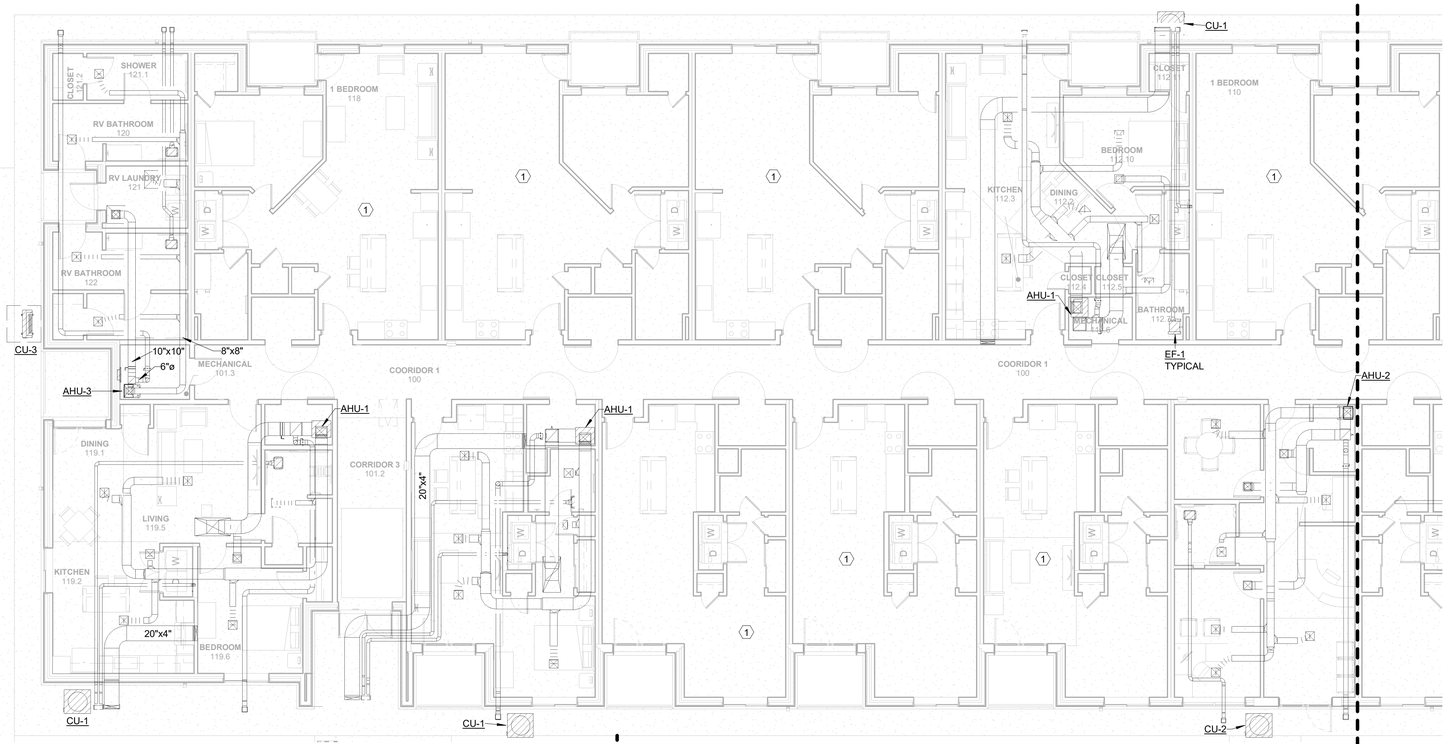

1 HVAC DUCTWORK - WEST
1/8" = 1'-0"

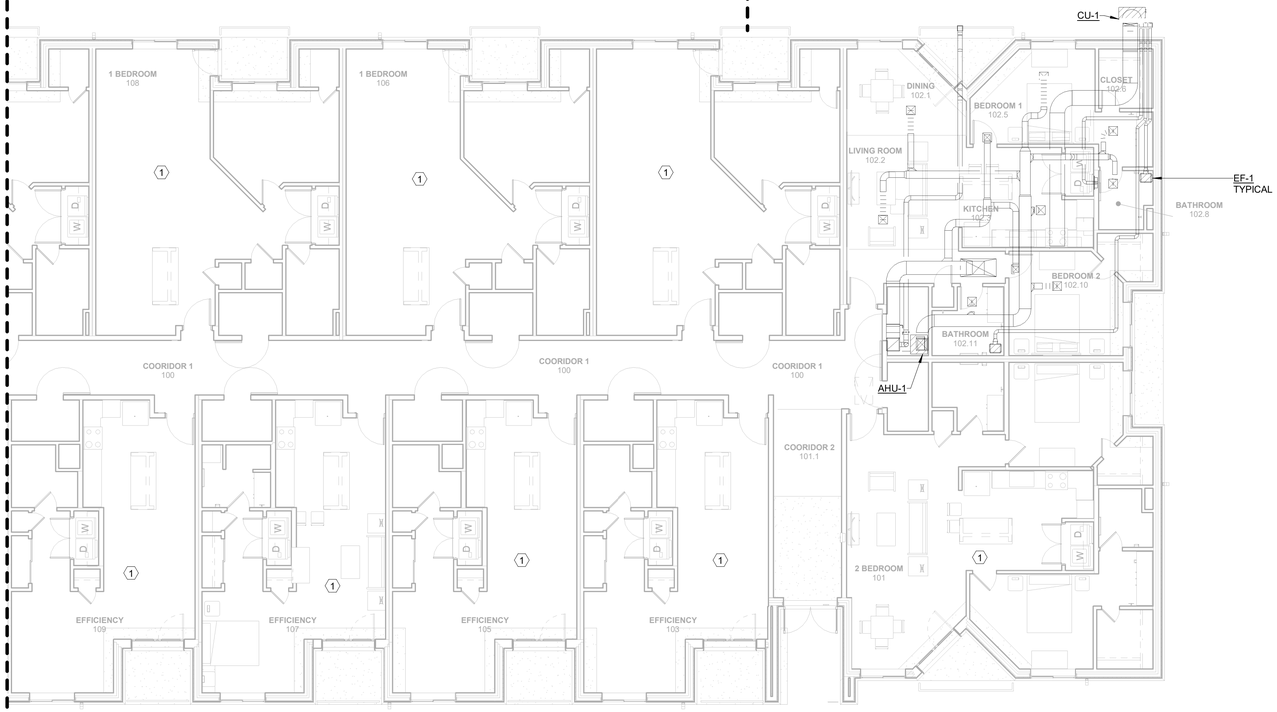

2 HVAC DUCTWORK - EAST
1/8" = 1'-0"

GENERAL NOTES:

1. THE FINAL LOCATION OF ALL EXHAUST GRILLES ARE TO BE A MINIMUM OF 10 FEET AWAY FROMAIR HANDLING UNIT OUTSIDE AIR INTAKES AND A MINIMUM OF 3 FEET AWAY FROM WINDOW AND DOOR OPENINGS INTO THE BUILDING.
2. THE FINAL LOCATION OF ALL CONDENSING UNITS MUST BE 6" AWAY FROM BUILDING EDGE TO MAINTAIN CLEARANCES.

KEYED NOTES:

1. REFER TO M301 FOR UNIT MECHANICAL DISTRIBUTION.

JSRa
JOHNSON SMITTHIPONG & ROSAMOND ASSOCIATES, INC.
5210 E Williams Cir • Ste 600 • Tucson, AZ 85711 •
(520) 547-7904 www.jsrarchinc.com

Consultants:

Bernhard TME Engineering
2990 N. Swan Road
Suite 227
Tucson, Arizona 85712
Phone: (520) 323-2381
tme@bernhardtme.com

ISSUED FOR INTERIM REVIEW
THIS DOCUMENT IS NOT TO BE USED FOR REGULATORY APPROVAL, PERMIT, OR CONSTRUCTION
Vernon Rosamond
Arizona Lic #: 9793
Date: 8/13/24

iHOUSE APARTMENTS

Tonalea, AZ 86044

U. S. DEPARTMENT OF HEALTH AND HUMAN SERVICES
INDIAN HEALTH SERVICE
DIVISION OF ENGINEERING SERVICES
SEATTLE / DALLAS

No.	Date	Description

Issue Date:	8/13/24
Project No:	23-390
Scale:	1/8" = 1'-0"
Drawn By:	Author
Checked By:	Checker

PHASE IV (Final CD)

Sheet Title:

FIRST FLOOR PLAN - HVAC DUCTWORK

Sheet Number:

M201

Autodesk Docs://23-390 IHS iHouse Apt v2023\05-24-0004-BTME MEPF-RVT23.rvt
8/12/2024 5:06:05 PM

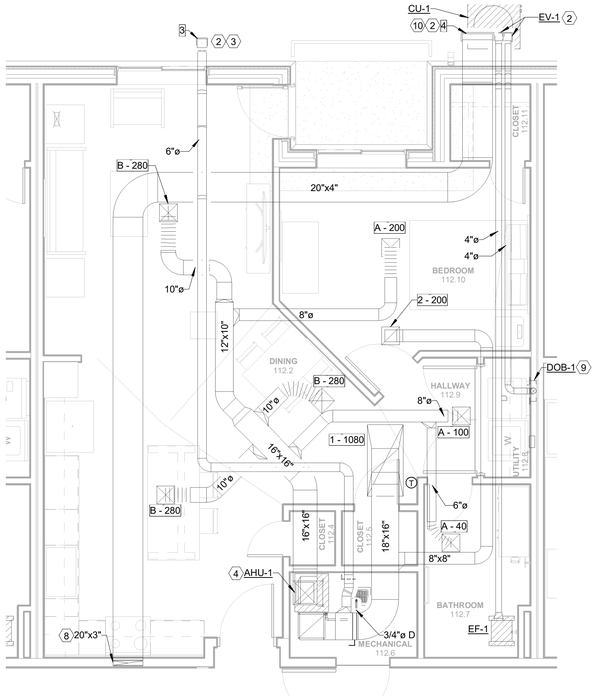

1 HVAC DUCTWORK - 1 BEDROOM APARTMENT

1/4" = 1'-0"

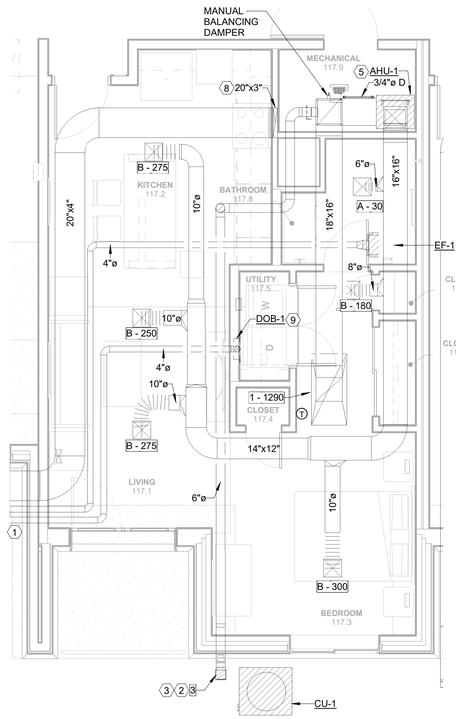

2 HVAC DUCTWORK - EFFICIENCY APARTMENT

1/4" = 1'-0"

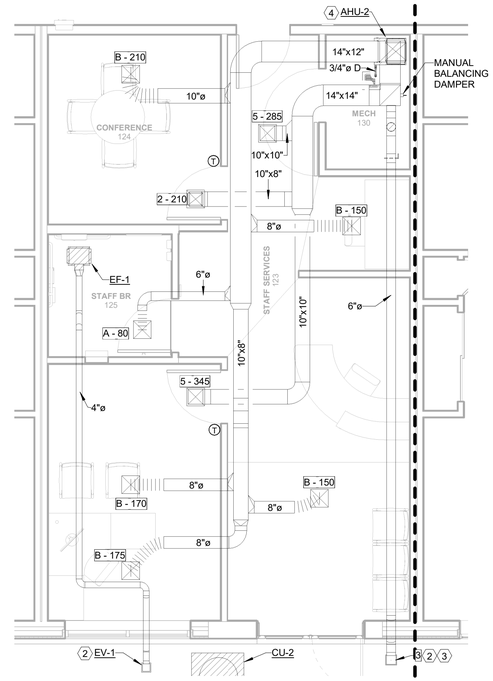

3 HVAC DUCTWORK - STORAGE

1/4" = 1'-0"

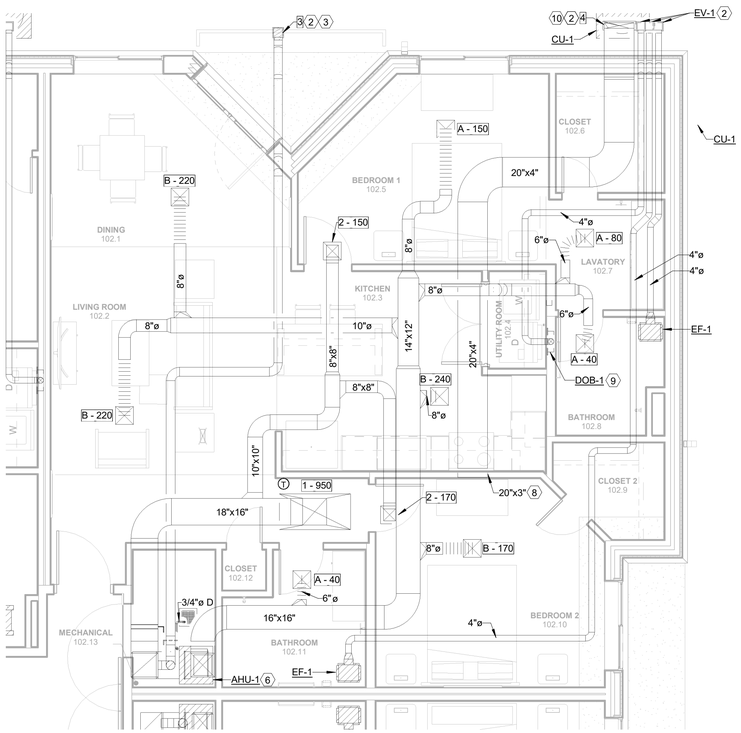

4 HVAC DUCTWORK - 2 BEDROOM APARTMENT

1/4" = 1'-0"

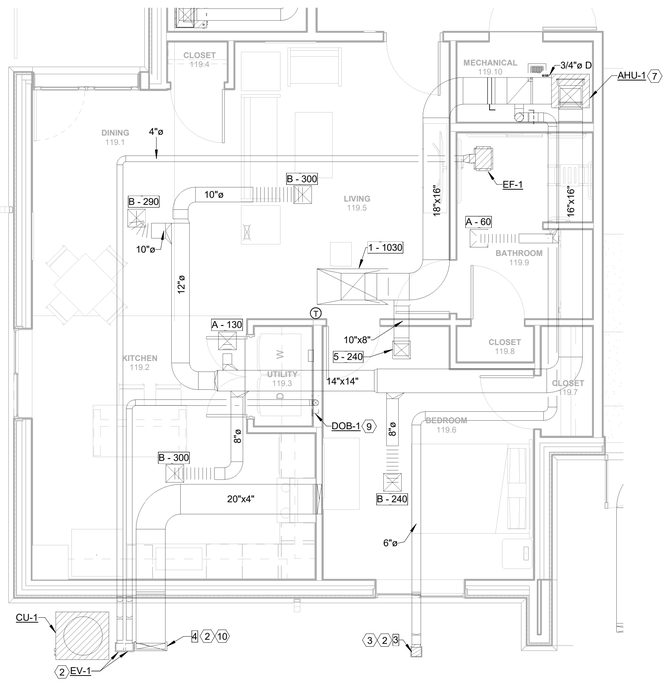

5 HVAC DUCTWORK - ACCESSIBLE APARTMENT

1/4" = 1'-0"

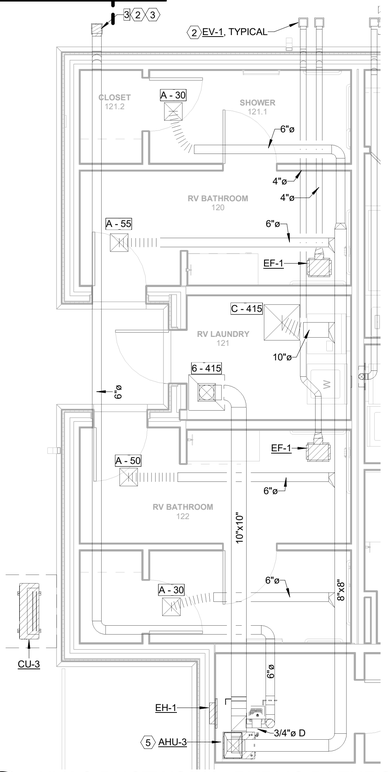

6 HVAC DUCTWORK - PUBLIC BATHROOM

1/4" = 1'-0"

GENERAL NOTES:

1. ROUTE ALL REFRIGERANT PIPING FROM CONDENSING UNIT TO AIR HANDLING UNITS ABOVE CEILING TIGHT TO STRUCTURE. REFRIGERANT PIPING SIZES SHALL BE PER MANUFACTURES INSTALLATION INSTRUCTIONS.REFER TO DETAIL 4 ON M401
2. SEE M002 FOR SCHEDULED DIFFUSER AND GRILLE TYPES AND NECK SIZES.
3. PROVIDE TEMPORARY CONSTRUCTION FILTERS FOR INDOOR AIR HANDLING UNIT. ONCE CONSTRUCITON IS COMPLETED, REPLACE CONSTRUCTION FILTERS WITH NEW FILTERS.
4. FLEX DUCT CONNECTIONS TO DIFFUSERS SHALL BE FREE OF KINKS AND SHARP BENDS; SUPPORT AS REQUIRED.
5. CONTRACTOR IS RESPONSIBLE FOR INSTALLING AIR HANDLING UNITS WITH ALL PROPER MANUFACTURER'S CLEARANCES.
6. DRYER EXHAUST: THE ONLY FLEX DUCT ALLOWED IS FROM THE CLOTHES DRYER TO DRYER OUTLET BOX CONNECTION; AQLL OTHER PORTIONS OF DUCTWORK TO BE HARD DUCT WITH CHARACTERISTICS PER SPECIFICATIONS.
7. PROVIDE CONDENSING UNIT WITH DIVERSITECH HPR-6 HEAT PUMP RISERS, OR EQUIVELENT UNER EACH CORNER.

KEYED NOTES:

1. REFER TO M201 FOR CONTINUATION.
2. REFER TO ARCHITECTUAL DRAWINGS FOR EXACT INSTRUCTION ON HOW EAVE VENT AND DUCTWORK IS TO BE INSTALLED.
3. REFER TO MECHANICAL DETAIL 6 ON M401 FOR DUCT WORK TRANSITION TO EAVE GRILLE.
4. BALANCE AIR HANDLING UNIT TO INTAKE 40 CFM OF OUTSIDE AIR OUT OF MAXIMUM AIRFLOW.
5. BALANCE AIR HANDLING UNIT TO INTAKE 165 CFM OF OUTSIDE AIR OUT OF MAXIMUM AIRFLOW.
6. BALANCE AIR HANDLING UNIT TO INTAKE 60 CFM OF OUTSIDE AIR OUT OF MAXIMUM AIRFLOW.
7. BALANCE AIR HANDLING UNIT TO INTAKE 50 CFM OF OUTSIDE AIR OUT OF MAXIMUM AIRFLOW.
8. DUCT DOWN IN WALL TO CONNECT TO TO MICROWAVE/RANGE HOOD.
9. DUCT DOWN IN WALL TO CONNECT TO DRYER OUTLET BOX, DOB-1.; INSTALL PER MANUFACTURER'S RECOMMENDATIONS.
10. REFER TO MECHANICAL DETAIL 7 ON M401 FOR INFORMATION ON MICROWAVE/RANGE HOOD EAVE VENT INSTALLATION.

JSRa
JOHNSON SMITTHIPONG & ROSAMOND ASSOCIATES, INC.
5210 E Williams Cir • Ste 600 • Tucson, AZ 85711 •
(520) 547-7904 www.jsrarchinc.com

Consultants:

Bernhard TME Engineering
2990 N. Swan Road
Suite 227
Tucson, Arizona 85712
Phone: (520) 323-2381
tme@bernhardtme.com

ISSUED FOR INTERIM REVIEW

THIS DOCUMENT IS NOT TO BE USED FOR REGULATORY APPROVAL, PERMIT, OR CONSTRUCTION

Vernon Rosamond
Arizona Lic #: 9793
Date: 8/13/24

iHOUSE APARTMENTS

Tonalea, AZ 86044

U. S. DEPARTMENT OF HEALTH AND HUMAN SERVICES
INDIAN HEALTH SERVICE
DIVISION OF ENGINEERING SERVICES
SEATTLE / DALLAS

No.	Date	Description

Issue Date:	8/13/24
Project No:	23-390
Scale:	1/4" = 1'-0"
Drawn By:	Author
Checked By:	Checker

PHASE IV (Final CD)

Sheet Title:

PARTIAL FLOOR PLANS - HVAC

Sheet Number:

M301

Autodesk Docs://23-390 IHS House Apt \2023\05-24-0004-BTME MEPF-RVT23.rvt
8/12/2024 5:06:09 PM

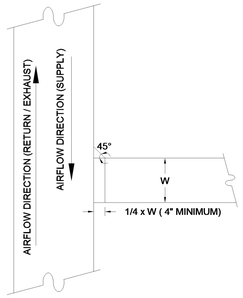

1 RECTANGULAR BRANCH DUCT CONNECTION
NOT TO SCALE

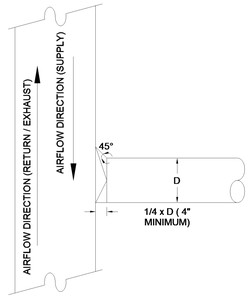

2 ROUND BRANCH DUCT CONNECTION
NOT TO SCALE

NOTE:
FLEXIBLE DUCT CONNECTIONS SHALL BE INSTALLED TO ADC STANDARDS AND SEALED TO UL STANDARDS PER AMC 603 AND 604.2.1. AS A MINIMUM, THE CONTRACTOR SHALL SECURE THE FLEXIBLE DUCT TO GRILLE AND METAL DUCT WITH DRAWBANDS, AND WRAP 3" WIDE ALUMINUM TAPE EQUAL TO HARDCAST "FOIL GRIP" AROUND DRAWBAND AND EXPOSED END OF FLEXIBLE DUCT INSULATION.

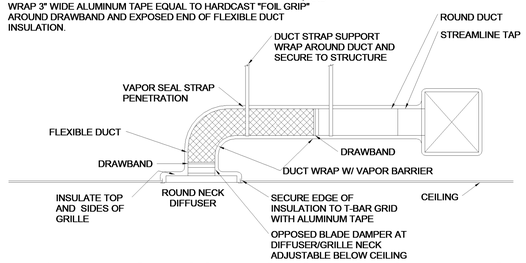

3 DIFFUSER CONNECTION TO ROUND DUCT
NOT TO SCALE

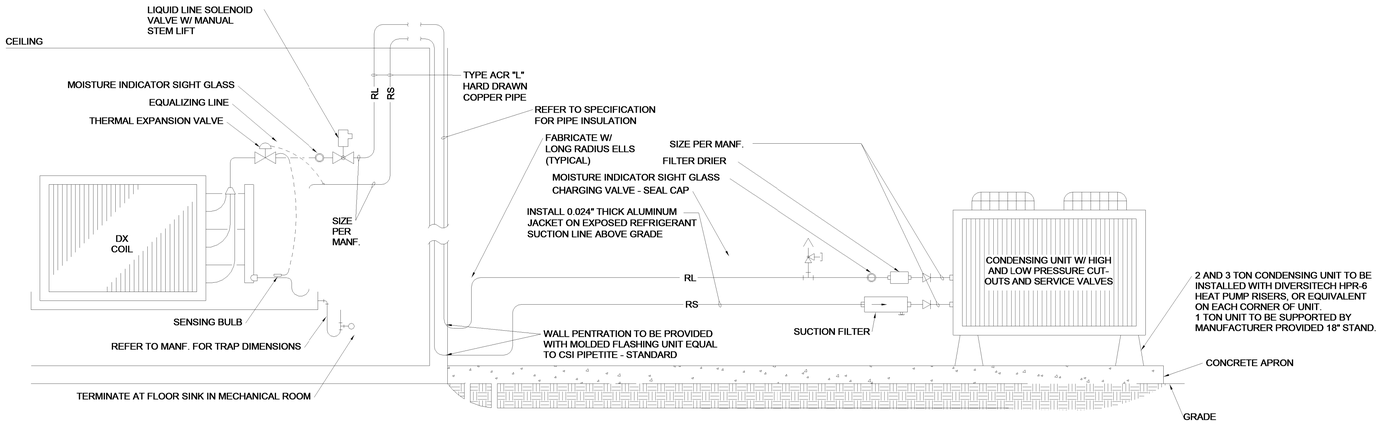

4 REFRIGERANT PIPING DETAIL
NOT TO SCALE

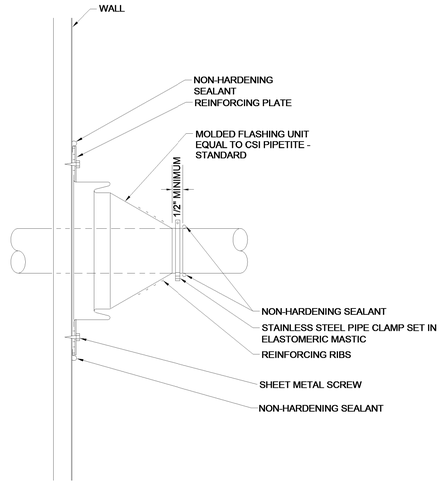

5 PREMOLDED PIPE FLASHING FOR WALL PENETRATIONS DETAIL
NOT TO SCALE

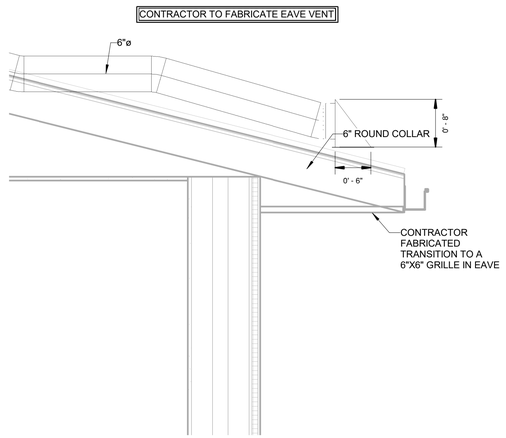

6 OUTSIDE AIR EAVE VENT TRANSITION DETAIL
1" = 1'-0"

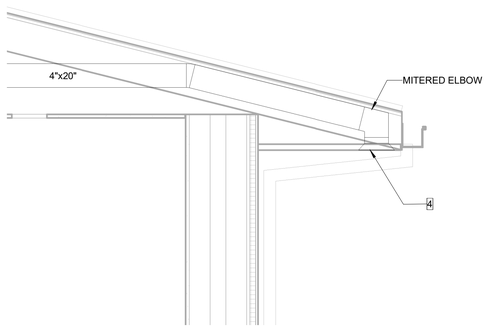

7 MICROWAVE/RANGE HOOD EAVE VENT DETAIL
1" = 1'-0"

JSRa
JOHNSON SMITTHIPONG & ROSAMOND ASSOCIATES, INC.
5210 E Williams Cir • Ste 600 • Tucson, AZ 85711 •
(520) 547-7904 www.jsrarchinc.com

Consultants:

Bernhard TME Engineering
2990 N. Swan Road
Suite 227
Tucson, Arizona 85712
Phone: (520) 323-2381
tme@bernhardtme.com

ISSUED FOR INTERIM REVIEW
THIS DOCUMENT IS NOT TO BE USED FOR REGULATORY APPROVAL, PERMIT, OR CONSTRUCTION
Vernon Rosamond
Arizona Lic #: 9793
Date: 8/13/24

iHOUSE APARTMENTS

Tonalea, AZ 86044

U. S. DEPARTMENT OF HEALTH AND HUMAN SERVICES
INDIAN HEALTH SERVICE
DIVISION OF ENGINEERING SERVICES
SEATTLE / DALLAS

No.	Date	Description

Issue Date:	8/13/24
Project No:	23-390
Scale:	As indicated
Drawn By:	Author
Checked By:	Checker

PHASE IV (Final CD)

Sheet Title:

DETAILS - HVAC

Sheet Number:

M401

Autodesk Docs://23-390 IHS iHouse Apt v2023/05-24-0004-BTME MEPF-RVT23.rvt
8/12/2024 5:06:11 PM

GENERAL NOTES

1. ALL CONDUCTORS #10 AND SMALLER SHALL BE SOLID COPPER, AND ALL CONDUCTORS #8 AND LARGER SHALL BE STRANDED COPPER UNLESS BOLTED LUGS AT TERMINALS.
2. ALL WIRING DEVICES SHALL BE INSTALLED PLUMB, SQUARE, AND TRUE; AND ALL DEVICES INSTALLED AT A SINGLE LOCATION SHALL BE ALIGNED.
3. MINIMUM WIRE SIZE SHALL BE #14 AWG UNLESS OTHERWISE SPECIFIED.
4. ALL WORK SHALL COMPLY WITH THE 2020 NATIONAL ELECTRICAL CODE.
5. CONTRACTOR SHALL REFER TO THE ARCHITECTURAL ELEVATIONS AND MILLWORK DETAILS FOR EXACT LOCATIONS OF ALL WIRING DEVICES.
6. CONTRACTOR SHALL REFER TO THE ARCHITECTURAL REFLECTED CEILING PLAN FOR EXACT LOCATION OF ALL LIGHT FIXTURES.
7. THE ELECTRICAL CONTRACTOR SHALL BE RESPONSIBLE FOR SUPPLYING SCHEDULES IN ALL ELECTRICAL PANELS. SCHEDULES ARE TO BE COMPUTER GENERATED AND PRINTED.

ELECTRICAL LEGEND

SYMBOL	DESCRIPTION	SYMBOL	DESCRIPTION
	NARROW LINEAR LIGHT FIXTURE		DUPLEX RECEPTACLE
	WALL MOUNTED NARROW LINEAR LIGHT FIXTURE		DUPLEX RECEPTACLE - MOUNT RECEPTACLE ABOVE COUNTERTOP. REFER TO ARCHITECTURAL ELEVATIONS
	STRIP LINEAR LIGHT FIXTURE	WP	DUPLEX RECEPTACLE - GROUND FAULT INTERRUPTING AND WEATHERPROOF WHILE IN USE
	DOWN LIGHT FIXTURE		DUPLEX RECEPTACLE - GROUND FAULT INTERRUPTING. MOUNT RECEPTACLE ABOVE COUNTERTOP. REFER TO ARCHITECTURAL ELEVATIONS
	WALL MOUNTED LIGHT FIXTURE		SPECIAL PURPOSE OUTLET. NEMA CONFIGURATION AS NOTED
	CEILING FAN WITH LIGHT FIXTURE	J	JUNCTION BOX
	PENDANT MOUNTED LIGHT FIXTURE		MOTOR CONNECTION
	POLE MOUNTED AREA LIGHT FIXTURE		NON-FUSED DISCONNECT SWITCH
S	SINGLE POLE SWITCH		FUSED DISCONNECT SWITCH
S3	THREE WAY SWITCH		DISCONNECT SWITCH PROVIDED WITH EQUIPMENT
SD	DIMMER SWITCH		RECESSED MOUNTED PANELBOARD
SM	MANUAL MOTOR STARTER WITH OVERLOADS, TOGGLE OPERATED		PAD MOUNTED DRY TYPE TRANSFORMER
SB	ERV EXHAUST BOOSTER SWITCH, LOW VOLTAGE PROVIDED BY MECHANICAL CONTRACTOR		PAD MOUNTED ELECTRICAL EQUIPMENT
PC	PHOTOCELL, RECESSED, WALL MOUNTED		BRANCH CIRCUIT HOMERUN - PANEL & CIRCUIT NUMBER INDICATED
	PUSHBUTTON, DOOR BELL OR GARAGE DOOR CONTROLLER		CONDUIT CONCEALED IN OR BELOW FLOOR SLAB
	CHIME, DOOR BELL		

FIRE ALARM LEGEND

SYMBOL	DESCRIPTION	SYMBOL	DESCRIPTION
	CARBON MONOXIDE DETECTOR WITH MONITOR, WALL MOUNTED. 120V HARDWIRED, BATTERY BACK-UP.	SD	PHOTO ELECTRIC SMOKE DETECTOR

TELE/DATA LEGEND

SYMBOL	DESCRIPTION	SYMBOL	DESCRIPTION
	WALL MOUNTED DATA OUTLET - WITH (1) CAT6 DATA PORT AND (1) CAT6 CABLING.	TV	TELEVISION OUTLET - WITH RG6 18 SOLID COPPER-CLAD STEEL QUAD SHIELD CATV BROADBAND COAX WITH RG6 COMPRESSION CONNECTORS.
	WALL MOUNTED DATA OUTLET - WITH (2) CAT6 DATA PORTS AND (2) CAT6 CABLING.		

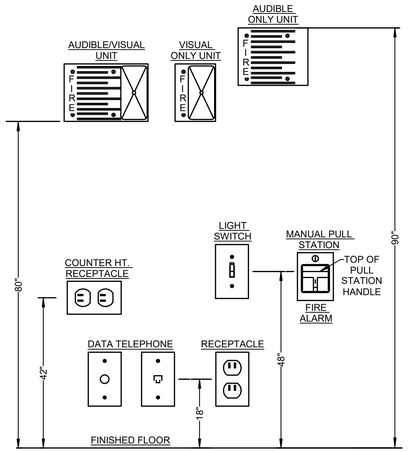

NOTE:

VERIFY EXACT MOUNTING HEIGHTS WITH PROJECT REQUIREMENTS. DEVICES MAY OR MAY NOT APPLY TO THIS PROJECT. REFER TO PLANS.

1 TYPICAL DEVICE MOUNTING HEIGHTS

NOT TO SCALE:

LIGHTING FIXTURE SCHEDULE

TYPE	MANUFACTURER	MODEL	LAMP	VOLTAGE	Apparent Load	DESCRIPTION
C1	PHILIPS	FSS230L835-120-DIM	LED, 3000 LUMENS, 3500K	120 V	26 VA	24" SURFACE MOUNT UTILITY STRIP.
D1	PHILIPS	CP5RB08830W-CP5RN	LED, 950 LUMENS, 3000K	120 V	13 VA	5" ROUND DOWNLIGHT FIXTURE
D2	SIGNIFY	S7R835K10W	LED, 1000 LUMENS, 3500K	120 V	14 VA	7" ROUND SURFACE MOUNTED DOWNLIGHT FIXTURE.
F1	KICHLER	330174NI	(1) MINI CANDELABRA BASE	120 V	128 VA	53" (5) BLADE CEILING FAN WITH LIGHT KIT, BRUSHED NICKLE FINISH.
L1	SIGNIFY	1SML42L835-4-FS-O2F-120-DIM	LED, 4200 LUMENS, 3500K	120 V	39 VA	12"x48' SHALLOW BODY, SURFACE MOUNTED, LENSED LED FIXTURE
L2	SIGNIFY	1SML42L835-4-FS-O2F-120-DIM-EMLED	LED, 4200 LUMENS, 3500K	120 V	39 VA	12"x48' SHALLOW BODY, SURFACE MOUNTED, LENSED LED FIXTURE WITH INGRAL EMERGENCY BATTERY PACK.
L3	LUMINAIRE LED	VPF124-502-3500K-120-277-OP-WHT- EMB310ST-ST/SC	LED, 4743 LUMENS, 3500K	120 V	55 VA	12"x48' SHALLOW BODY, SURFACE MOUNTED, LENSED LED FIXTURE WITH EMERGENCY BATTERY PACK
L4	LUMINAIRE LED	LVP524 4FT NODIM 25W 35K 120 CLP WHT WL PHSC	LED, 3089 LUMENS, 3500K	120 V	27 VA	LED, 5.51"W X 4 FT, SURFACE, VANDAL RESISTANT, WET LOCATION
P1	CANARM	ICH578A03BN18	LED, 750 LUMENS, 3000K	120 V	60 VA	18" DIAMETER x 21" HIGH PENDANT FIXTURE WITH BRUSHED NICKLE FINISH
S1	PHILIPS	GL18-1-3-105LA-4870-NW-120-BRP-	LED, 10446 LUMENS, 4000K	120 V	105 VA	LED SITE FIXTURE POLE MOUNTED TO A 4" SQUARE STRAIGHT STEEL POLE
V1	KICHLER	TGL 80524 NI	(5) LED, 14.5W, A19 (046677455675)	120 V	500 VA	5 LIGHT 43" VANITY FIXTURE WITH BRUSHED NICKLE FINISH AND SATIN ETCHED GLASS
W1	PHILIPS	101L-16L-650-NW-G1-3-EBPC-120V-BZ	LED, 3458 LUMENS, 4000K	120 V	37 VA	WALL MOUNTED EXTERIOR WALL PACK WITH EMERGENCY BATTERY PACK. REFER TO ARCHITECTURAL ELEVATIONS FOR MOUNTING HEIGHT.
W2	PHILIPS	101L-16L-700-NW-G1-4-120V-IMRI2-BZ	LED, 3353 LUMENS, 4000K	120 V	37 VA	WALL MOUNTED EXTERIOR WALL PACK WITH INFRARED MOTION SENSOR. MOUNTED 8'-0" AFG TO BOTTOM OF FIXTURE.
X1	PHILIPS	CE-15050-VERWEM	LED	120 V	4 VA	WALL MOUNTED EXIT SIGN, SINGLE FACED WITH RED LETTERS, WHITE HOUSING, AND EMERGENCY BATTERY PACK.
X2	PHILIPS	CE-15050-VERWEM	LED	120 V	4 VA	CEILING MOUNTED EXIT SIGN, DUAL FACED WITH RED LETTERS, WHITE HOUSING, AND EMERGENCY BATTERY PACK. REFER TO PLANS FOR DIRECTIONAL ARROWS
X3	PHILIPS	CE-15050-VERWEM	LED	120 V	4 VA	CEILING MOUNTED EXIT SIGN, DUAL FACED WITH RED LETTERS, WHITE HOUSING, AND EMERGENCY BATTERY PACK.

JSRa
JOHNSON SMITTHIPONG & ROSAMOND ASSOCIATES, INC.
5210 E Williams Cir • Ste 600 • Tucson, AZ 85711 •
(520) 547-7904 www.jsrarchinc.com

Consultants:

Bernhard TME Engineering
2990 N. Swan Road
Suite 227
Tucson, Arizona 85712
Phone: (520) 323-2381
tme@bernhardtme.com

ISSUED FOR INTERIM REVIEW

THIS DOCUMENT IS NOT TO BE USED FOR REGULATORY APPROVAL, PERMIT, OR CONSTRUCTION

Vernon Rosamond
Arizona Lic #: 9793
Date: 8/13/24

iHOUSE APARTMENTS

Tonalea, AZ 86044

U. S. DEPARTMENT OF HEALTH AND HUMAN SERVICES
INDIAN HEALTH SERVICE
DIVISION OF ENGINEERING SERVICES
SEATTLE / DALLAS

No.	Date	Description

Issue Date:	8/13/24
Project No:	23-390
Scale:	As indicated
Drawn By:	Author
Checked By:	Checker

PHASE IV (Final CD)

Sheet Title:

SCHEDULES, LEGENDS AND GENERAL NOTES - ELECTRICAL

Sheet Number:

E001

Autodesk Docs://23-390 IHS iHouse Apt v2023/05-24-0004-BTME MEPF-RVT23.rvt
8/12/2024 11:41:49 AM

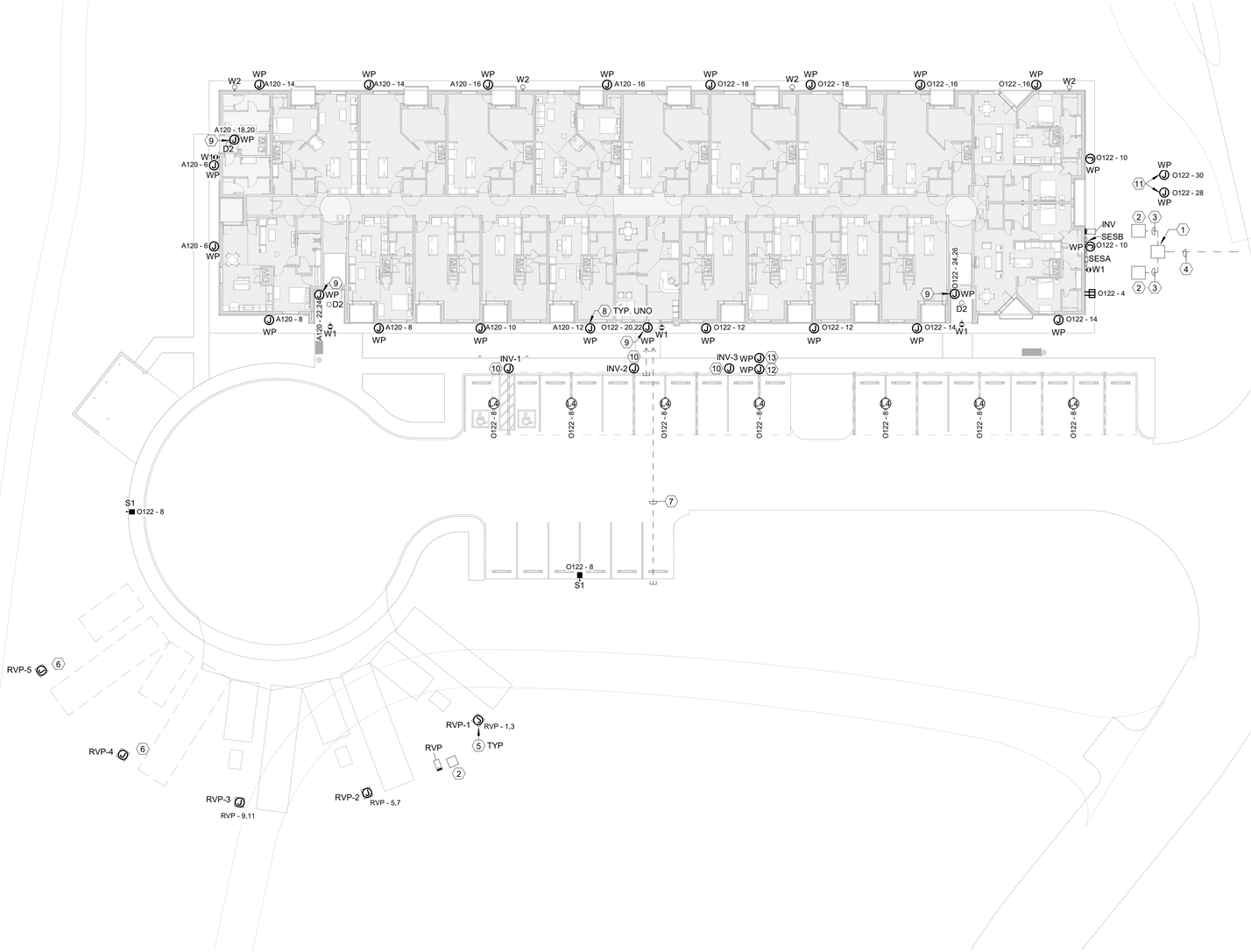

1 SITE PLAN - ELECTRICAL

1" = 20'-0"

GENERAL NOTES:

A. INSTALLATION AND MATERIALS FOR ALL ASSOCIATED NTUA INCOMING PRIMARY AND SECONDARY CONDUITS, PADS, GROUNDING, WORKING CLEARANCES SHALL COMPLY WITH NAVAJO TRIBAL UTILITY AUTHORITY (NTUA) STANDARDS AND REQUIREMENTS.
B. REFER TO PANEL SCHEDULES AND ONE LINE DIAGRAM FOR ADDITIONAL DETAILS AND REQUIREMENTS.
C. INSTALLATION AND MATERIALS FOR ALL ASSOCIATED INCOMING FRONTIER COMMUNICATION CABLING SHALL COMPLY WITH FRONTIER COMMUNICATION STANDARDS AND REQUIREMENTS.
D. SITE LIGHTING AND EXTERIOR BUILDING LIGHTING SHALL BE CONTROLLED WITH A WALL MOUNTED PHOTOCELL AND 3-POLE MECHANICALLY HELD LIGHTING CONTACTOR. LOCATE CONTACTOR ADJACENT TO O122 BRANCH CIRCUIT PANELBOARD.
E. PROVIDE #10 AWG BRANCH CIRCUIT CONDUCTORS FOR ALL SITE LIGHTING AND EXTERIOR BUILDING LIGHTING BRANCH CIRCUITS.

KEYED NOTES:

1. NTUA PAD MOUNTED SWITCH. PROVIDE CONCRETE PAD AND GROUND PER NTUA REQUIREMENTS.
2. NTUA PAD MOUNTED TRANSFORMER. NTUA TO FURNISH A FIBER REINFORCED CONCRETE BOX PAD. CONTRACTOR TO INSTALL BOX PAD. TOP OF BOX PAD TO BE 4-6" ABOVE FINISHED GRADE. CONDUITS TO BE FLUSH WITH TOP OF BOX PAD.
3. PROVIDE (3) 3" PVC SCHEDULE 40 UNDERGROUND PRIMARY CONDUITS. CONTRACTOR TO PROVIDE PULL STRINGS WITHIN CONDUITS. CONDUITS SHALL BE INSTALLED A MINIMUM OF 36" DEEP BELOW FINISHED GRADE. INSTALL DETECTABLE WARNING TAPE 12" ABOVE EACH CONDUIT. NTUA TO PROVIDE PRIMARY CONDUCTORS IN 3" CONDUITS.
4. TO NTUA OVERHEAD AERIAL DISTRIBUTION POLE.
5. PROVIDE PAD MOUNTED UTILITY SUPPLY GROUP RV PEDESTAL CATALOG NO. H75P-3L OR APPROVED EQUAL. UNMETERED 50/30/20 PEDESTAL, 100A, 120/240V - 1 PHASE - 3 WIRE, LED LIGHT PHOTOCELL, DOOR LENS AND LOCKABLE COVER.
6. FUTURE PAD MOUNTED UTILITY SUPPLY GROUP RV PEDESTAL. STUB OUT AND CAP (1).
7. STUB OUT AND CAP UNDERGROUND (1) 1"C WITH PULL WIRE FROM PANEL 0122 FOR FUTURE UTILIZATION.
8. NEMA 3R JUNCTION BOX FOR SELF-REGULATING GUTTER AND DOWNSPOUT SNOW/ICE MELTING SYSTEM.
9. NEMA 3R JUNCTION BOX FOR SELF-REGULATING WALKWAY SNOW/ICE MELTING SYSTEM.
10. SOLAR PV PARKING CANOPY INVERTER PROVIDED BY PARKING CANOPY CONTRACTOR. REFER TO SESA PANEL SCHEDULE AND ONE LINE DIAGRAM FOR ADDITIONAL DETAILS AND REQUIREMENTS.
11. NEMA 3R JUNCTION BOX FOR BACKFLOW PREVENTER HEATER BOX.
12. NEMA 3R JUNCTION BOX FOR PEDESTAL MOUNTED ELECTRIC CAR LEVEL1 DUAL PORT CHARGING STATION. CHARGING STATION TO BE COMPLETE WITH CREDIT/DEBET CARD SCANNERS.
13. NEMA 3R JUNCTION BOX FOR DATA/SYSTEMS CABLING FROM CHARGING STATION TO TERMINAL BOARD.

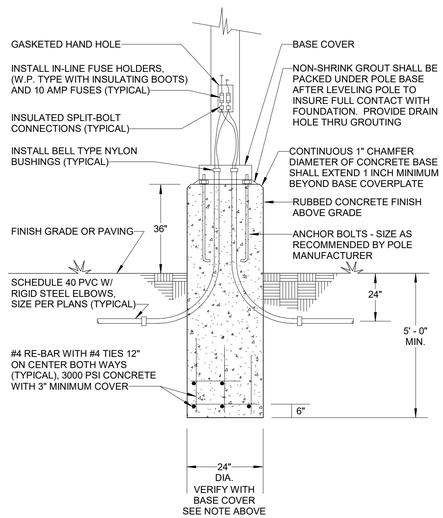

LIGHTING POLE ELEVATED FOUNDATION NOTES:

1. EACH PANEL SERVING EXTERIOR LIGHTING POLE CIRCUIT(S) SHALL HAVE SURGE PROTECTION INSTALLED AT THE PANEL.
2. THE FIRST AND LAST LIGHTING POLES ON EACH LIGHTING POLE CIRCUIT SHALL HAVE (1) SPARE CONDUIT STUBBED-OUT 4'-0" BEYOND THE POLE FOR FUTURE.

2 LIGHTING POLE ELEVATED FOUNDATION DETAIL

NOT TO SCALE

JSRa
JOHNSON SMITTHIPONG & ROSAMOND ASSOCIATES, INC.
5210 E Williams Cir • Ste 600 • Tucson, AZ 85711 •
(520) 547-7904 www.jsrarchinc.com

Consultants:

Bernhard TME Engineering
2990 N. Swan Road
Suite 227
Tucson, Arizona 85712
Phone: (520) 323-2381
tme@bernhardtme.com

ISSUED FOR INTERIM REVIEW
THIS DOCUMENT IS NOT TO BE USED FOR REGULATORY APPROVAL, PERMIT, OR CONSTRUCTION
Vernon Rosamond
Arizona Lic #: 9793
Date: 8/13/24

iHOUSE APARTMENTS

Tonalea, AZ 86044

U. S. DEPARTMENT OF HEALTH AND HUMAN SERVICES
INDIAN HEALTH SERVICE
DIVISION OF ENGINEERING SERVICES
SEATTLE / DALLAS

No.	Date	Description

Issue Date:	8/13/24
Project No:	23-390
Scale:	As indicated
Drawn By:	Author
Checked By:	Checker

PHASE IV (Final CD)

Sheet Title:

SITE PLAN - ELECTRICAL

Sheet Number:

E101

Autodesk Docs://23-390 IHS iHouse Apt v2023/05-24-0004-BTME MEPF-RVT23.rvt
8/12/2024 11:41:50 AM

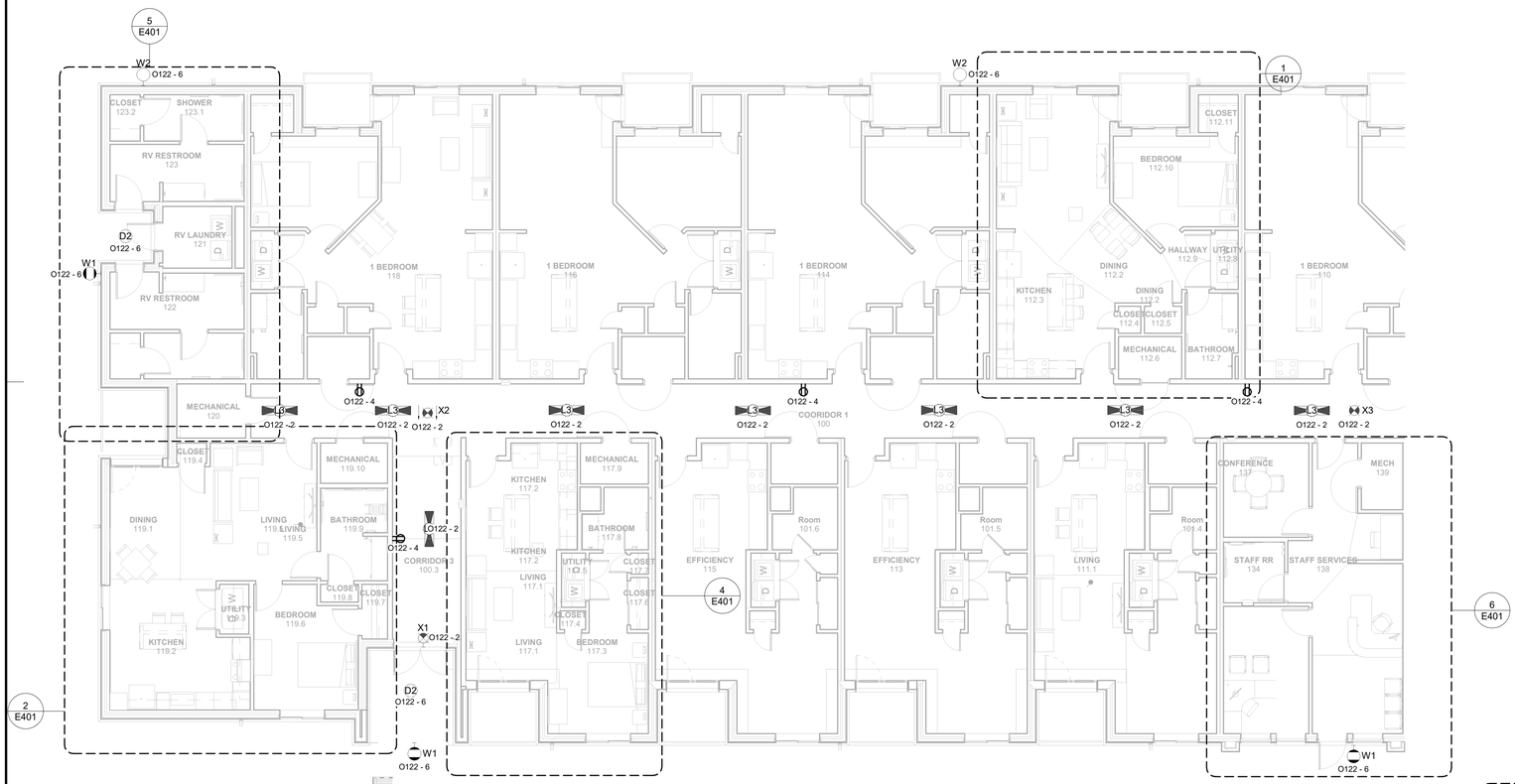

1 ELECTRICAL PLAN - EAST
1/8" = 1'-0"

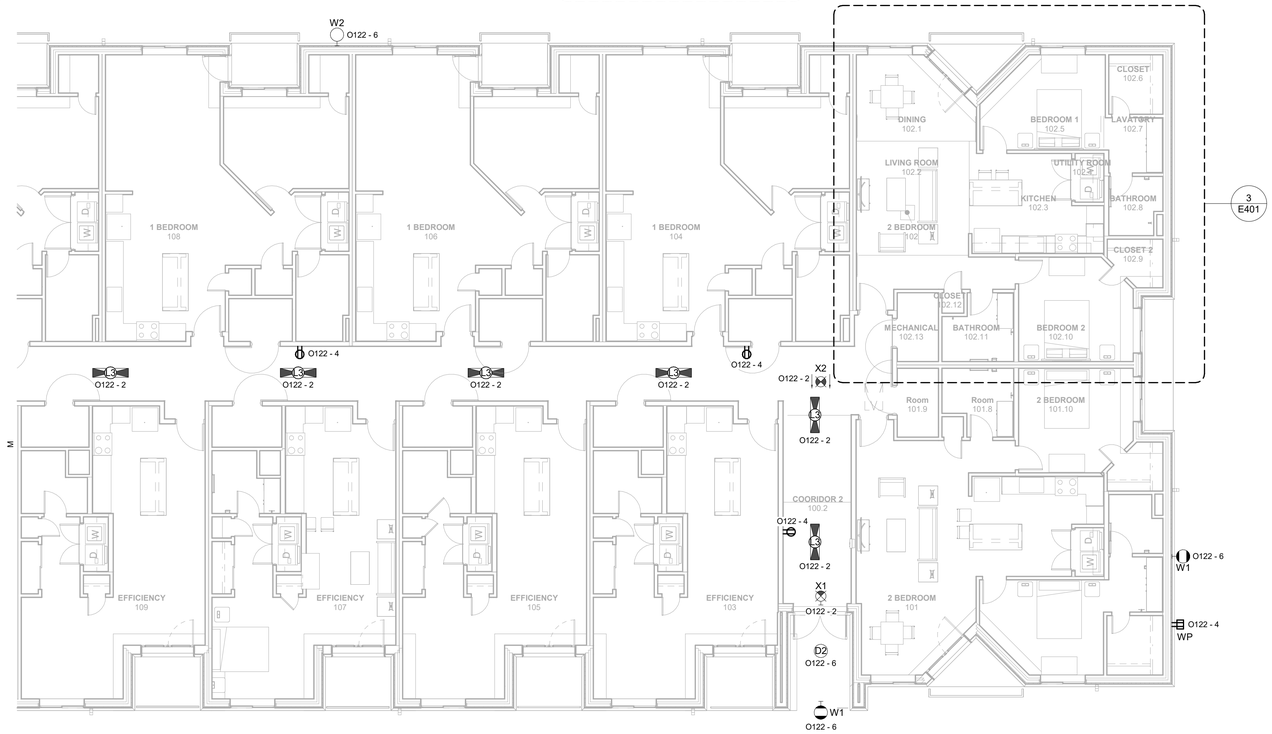

2 ELECTRICAL PLAN - WEST
1/8" = 1'-0"

JSRa
JOHNSON SMITTHIPONG & ROSAMOND ASSOCIATES, INC.
5210 E Williams Cir • Ste 600 • Tucson, AZ 85711 •
(520) 547-7904 www.jsrarchinc.com

Consultants:

Bernhard TME Engineering
2990 N. Swan Road
Suite 227
Tucson, Arizona 85712
Phone: (520) 323-2381
tme@bernhardtme.com

ISSUED FOR INTERIM REVIEW

THIS DOCUMENT IS NOT TO BE USED FOR REGULATORY APPROVAL, PERMIT, OR CONSTRUCTION

Vernon Rosamond
Arizona Lic #: 9793
Date: 8/13/24

iHOUSE APARTMENTS

Tonalea, AZ 86044

U. S. DEPARTMENT OF HEALTH AND HUMAN SERVICES
INDIAN HEALTH SERVICE
DIVISION OF ENGINEERING SERVICES
SEATTLE / DALLAS

No.	Date	Description

Issue Date:	8/13/24
Project No:	23-390
Scale:	1/8" = 1'-0"
Drawn By:	Author
Checked By:	Checker

PHASE IV (Final CD)

Sheet Title:

ELECTRICAL PLAN

Sheet Number:

E121

Autodesk Docs://23-390 IHS iHouse Apt v2023/05-24-0004-BTME MEPF-RVT23.rvt
8/12/2024 11:41:53 AM

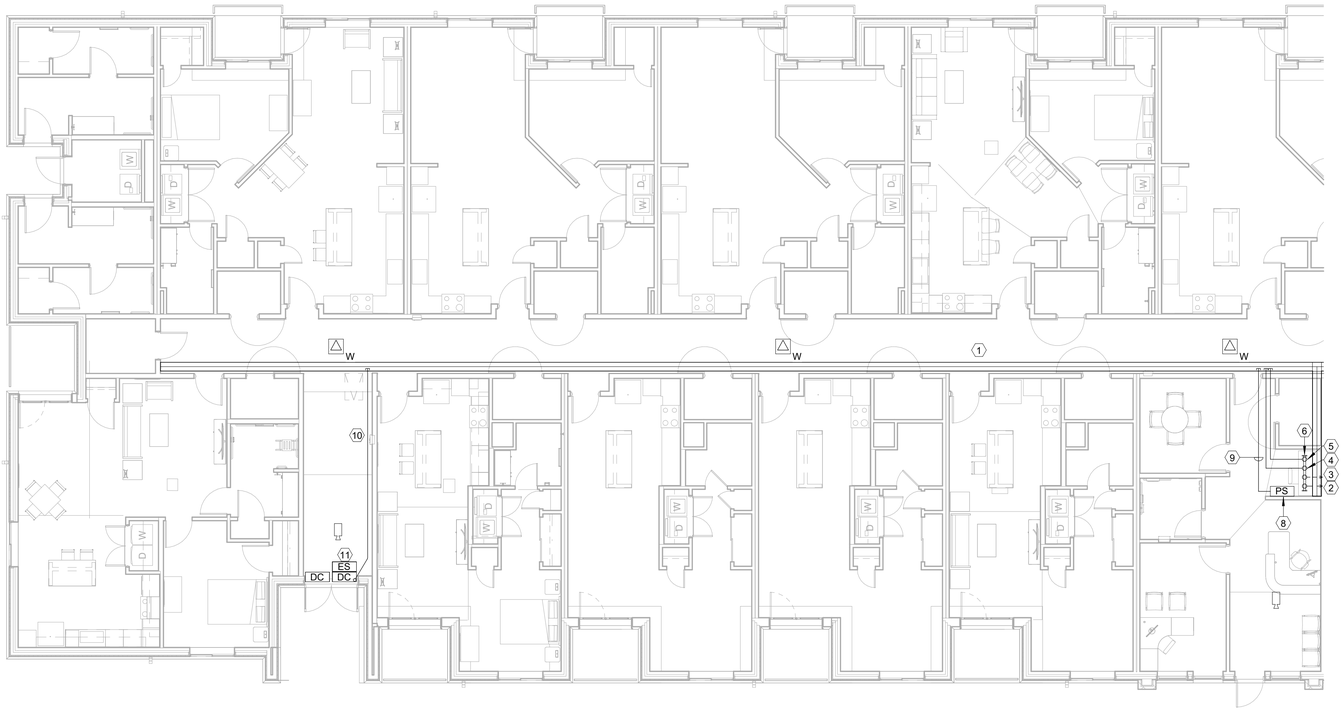

1 LOW VOLTAGE SYSTEMS PLAN - EAST
1/8" = 1'-0"

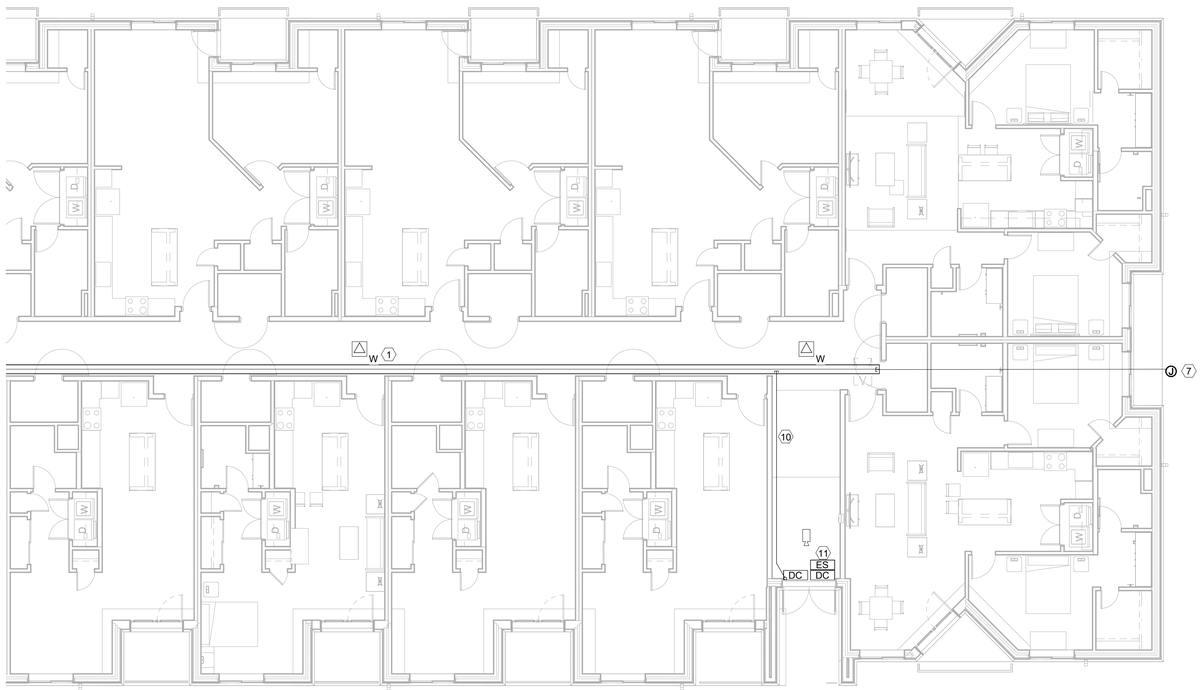

2 LOW VOLTAGE SYSTEMS PLAN - WEST
1/8" = 1'-0"

GENERAL NOTES:

A. REFER TO SHEET E401 PARTIAL ELECTRICAL PLAN FOR ADDITIONAL LOW VOLTAGE SYSTEMS DETAILS AND REQUIREMENTS.

KEYED NOTES:

1. 12" X 4" BASKET CABLE TRAY LOCATED WITHIN ACCESSIBLE ATTIC SPACE.
2. PROVIDE (1) 4" C WITH PULL WIRE UNDERGROUND INCOMING TELE/DATA SERVICE. INSTALLATION SHALL COMPLY WITH FRONTIER COMMUNICATIONS STANDARDS AND REQUIREMENTS.
3. PROVIDE (1) 2 1/2" C STUBBED TO CABLE TRAY FOR INCOMING SATELLITE CABLE TELEVISION CABLING.
4. PROVIDE (1) 4" C STUBBED TO CABLE TRAY FOR TELE/DATA CABLING.
5. PROVIDE (1) 4" C STUBBED TO CABLE TRAY FOR SATELLITE CABLE TELEVISION CABLING.
6. PROVIDE 4'X8'X3/4" FIRE RESISTANT PLYWOOD TERMINAL BOARD WITH (1) #6 GROUND CONDUCTOR.
7. NEMA 3R JUNCTION BOX MOUNTED ON ROOF EAVE FOR SATELLITE CABLE TELEVISION CABLING. PROVIDE (1) 2 1/2" C STUBBED TO CABLE TRAY.
8. POWER SUPPLY WITH PROGRAMMABLE CONTROLLER PROVIDED BY DOOR HARDWARE CONTRACTOR.
9. PROVIDE (2) 1" C WITH PULL WIRE FROM POWER SUPPLY TO BASKET CABLE TRAY. TERMINATE CONDUITS AT CABLE TRAY WITH NYLON BUSHINGS.
10. PROVIDE (1) 1"C WITH PULL WIRE FROM HEAD OF DOOR FRAME TO BASKET CABLE TRAY. TERMINATE CONDUIT AT CABLE TRAY WITH NYLON BUSHING.
11. ELECTRONIC DOOR STRIKE, DOOR CONTACT SWITCHES, CABLING, TERMINATIONS AND TESTING PROVIDED BY DOOR HARDWARE CONTRACTOR.

JSRa
JOHNSON SMITTHIPONG & ROSAMOND ASSOCIATES, INC.
5210 E Williams Cir • Ste 600• Tucson, AZ 85711 •
(520) 547-7904 www.jsrarchinc.com

Consultants:

Bernhard TME Engineering
2990 N. Swan Road
Suite 227
Tucson, Arizona 85712
Phone: (520) 323-2381
tme@bernhardtme.com

ISSUED FOR INTERIM REVIEW
THIS DOCUMENT IS NOT TO BE USED FOR REGULATORY APPROVAL, PERMIT, OR CONSTRUCTION
Vernon Rosamond
Arizona Lic #: 9793
Date: 8/13/24

iHOUSE APARTMENTS

Tonalea, AZ 86044

U. S. DEPARTMENT OF HEALTH AND HUMAN SERVICES
INDIAN HEALTH SERVICE
DIVISION OF ENGINEERING SERVICES
SEATTLE / DALLAS

No.	Date	Description

Issue Date:	8/13/24
Project No:	23-390
Scale:	1/8" = 1'-0"
Drawn By:	Author
Checked By:	Checker

PHASE IV (Final CD)

Sheet Title:

LOW VOLTAGE SYSTEMS PLAN

Sheet Number:

E131

Autodesk Docs://23-390 IHS iHouse Apt v2023/05-24-0004-BTME MEPF-RVT23.rvt
8/12/2024 11:41:54 AM

GENERAL NOTES:

A. REFER TO SHEET E401 PARTIAL ELECTRICAL PLANS FOR ADDITIONAL FIRE ALARM SYSTEM DETAILS AND REQUIREMENTS.

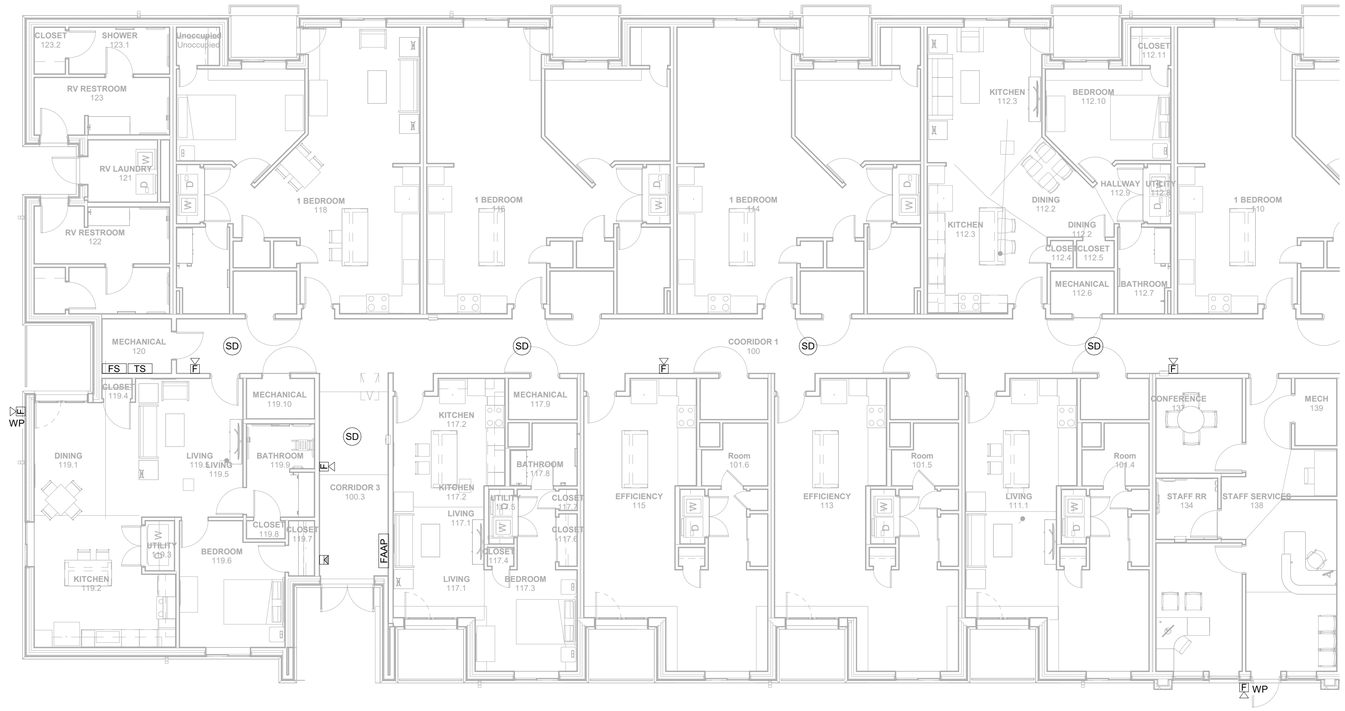

1 FIRE ALARM SYSTEM PLAN - EAST
1/8" = 1'-0"

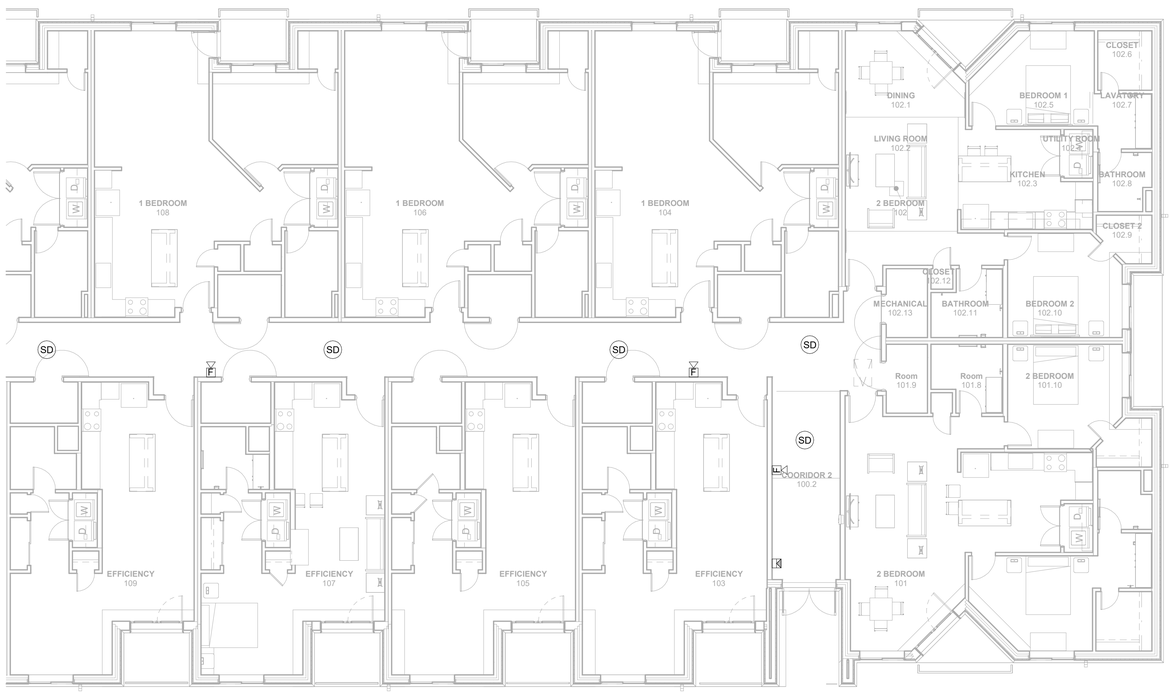

2 FIRE ALARM SYSTEM PLAN - WEST
1/8" = 1'-0"

JOHNSON SMITTHIPONG & ROSAMOND ASSOCIATES, INC.
5210 E Williams Cir • Ste 600 • Tucson, AZ 85711 •
(520) 547-7904 www.jsrarchinc.com

Consultants:

Bernhard TME Engineering
2990 N. Swan Road
Suite 227
Tucson, Arizona 85712
Phone: (520) 323-2381
tme@bernhardtme.com

ISSUED FOR INTERIM REVIEW
THIS DOCUMENT IS NOT TO BE USED FOR REGULATORY APPROVAL, PERMIT, OR CONSTRUCTION
Vernon Rosamond
Arizona Lic #: 9793
Date: 8/13/24

iHOUSE APARTMENTS

Tonalea, AZ 86044

U. S. DEPARTMENT OF HEALTH AND HUMAN SERVICES
INDIAN HEALTH SERVICE
DIVISION OF ENGINEERING SERVICES
SEATTLE / DALLAS

No.	Date	Description

Issue Date:	8/13/24
Project No:	23-390
Scale:	1/8" = 1'-0"
Drawn By:	Author
Checked By:	Checker

PHASE IV (Final CD)

Sheet Title:

FIRE ALARM SYSTEM PLAN

Sheet Number:

E141

Autodesk Docs://23-390 IHS iHouse Apt v2023/05-24-0004-BTME MEPF-RVT23.rvt
8/12/2024 11:41:55 AM

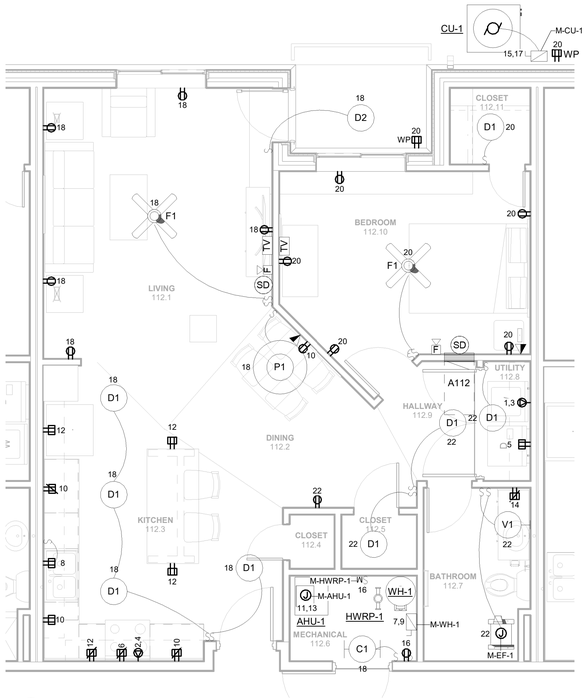

1 ELECTRICAL PLAN - 1 BEDROOM APARTMENT

1/4" = 1'-0"

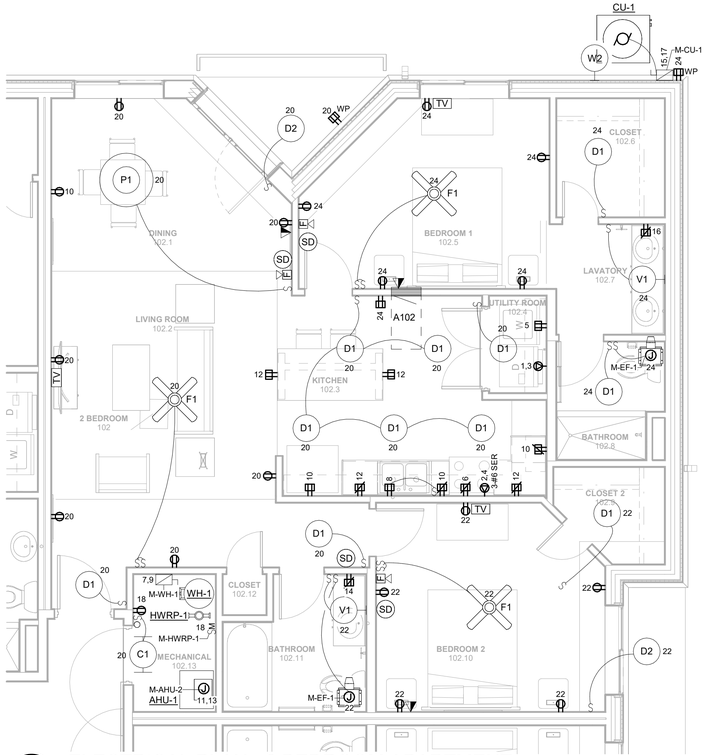

3 ELECTRICAL PLAN - 2 BEDROOM APARTMENT

1/4" = 1'-0"

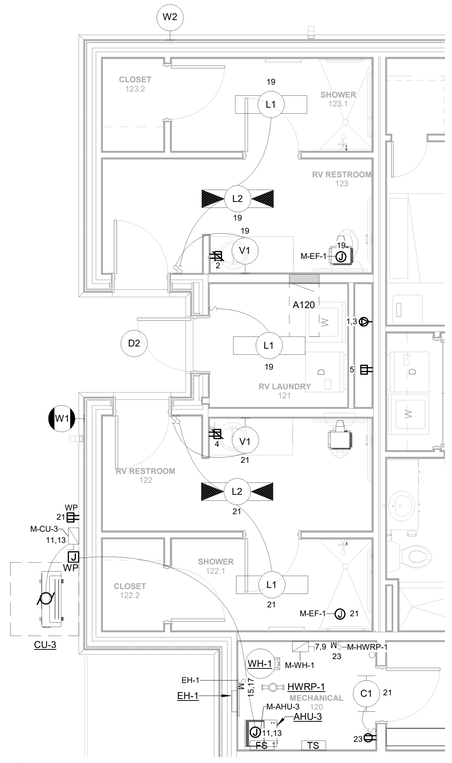

5 ELECTRICAL PLAN - RV RESTROOMS

1/4" = 1'-0"

GENERAL NOTES:

A. ALL ELECTRICAL OUTLET BOXES WITHIN FIRE RATED WALLS TO BE WRAPPED WITH 3M FIRE BARRIER MOLDABLE PUTTY PADS MPP+.
B. ALL 15A AND 20A, 125V NON-LOCKING (DUPLEX RECEPTACLES) WITHIN RESIDENCE SHALL BE TAMPER-RESISTANT RECEPTACLES PER NEC 406.12.
C. IN ADDITION TO NOTE 1 REQUIREMENTS, ALL 15A AND 20A, 125V NON-LOCKING (DUPLEX RECEPTACLES) WITHIN RESIDENCE BATHROOMS, GARAGE, EXTERIOR AND KITCHEN RECEPTACLES SERVING COUNTERTOP SURFACES AND LAUNDRY ROOMS SHALL BE GROUND FAULT CIRCUIT INTERRUPTER (GFCI) PER NEC 210.8 (A).
D. IN ADDITION TO NOTE 1 AND 2 REQUIREMENTS, EXTERIOR DUPLEX RECEPTACLES SHALL BE WEATHER-RESISTANT WITH WEATHER-PROOF COVER SUITABLE FOR USE IN WET LOCATIONS PER NEC 406.9. TAYMAC MX42805 VERTICAL METALLIC LOW PROFILE COVER OR APPROVED EQUAL.
E. ALL DUPLEX RECEPTACLES SOURCED FROM A 20A/1P BREAKER INDICATED WITHIN THE PANEL SCHEDULE SHALL BE 20A, 125V RATED.
F. OUTLETS LOCATED IN PARTY WALLS SHALL BE OFFSET TO MAINTAIN INTEGRITY OF THE FIREWALL AND SOUND RATING OF THE WALL. OUTLET BOX WITHIN FIREWALL TO BE SEALED WITH 3M FIRE BARRIER MOLDABLE PUTTY PADS MPP+.
G. PROVIDE 3-#8, 1-#10 G, NM-B TO RANGE/OVEN.
H. PROVIDE 2-#10, 1-#10 G, NM-B TO ELECTRIC DRYER.
I. PROVIDE 2-#8, 1-#10 G, NM-B TO ELECTRIC WATER HEATER.
J. PROVIDE 2-#10, 1-#10 G, NM-B TO CONDENSING UNIT CU-1.
K. SPLIT WIRE DUPLEX RECEPTACLE FOR DISPOSAL/DISHWASHER. SWITCH TO CONTROL ONE RECEPTACLE TO SERVE DISPOSAL.
L. REFER TO DETAIL P401/4 FOR ELECTRICAL AND WATER METER INTERCONNECTION REQUIREMENTS.
M. PROVIDE (1) 1" EMT CONDUIT FROM EACH TELE/DATA AND CABLE TELEVISION OUTLET TO BASKET CABLE TRAY LOCATED WITHIN ACCESSIBLE ATTIC SPACE. TERMINATE ALL CONDUITS AT CABLE TRAY WITH NYLON BUSHINGS

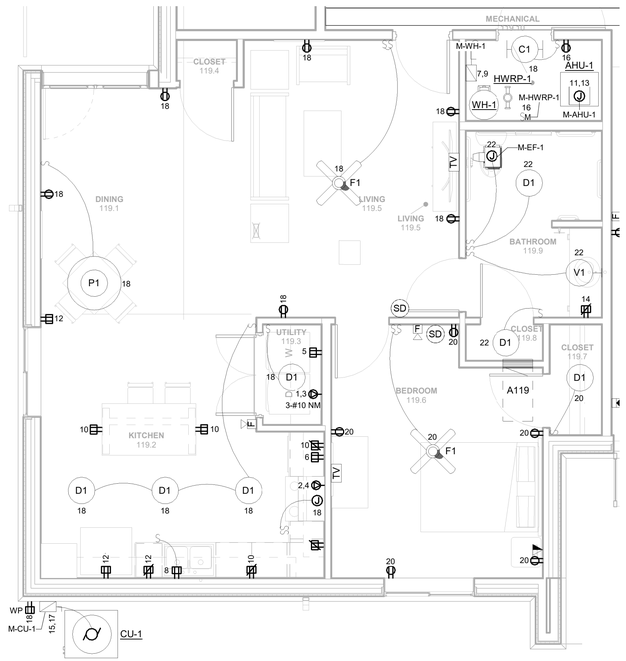

2 ELECTRICAL PLAN - 1 BEDROOM ADA APARTMENT

1/4" = 1'-0"

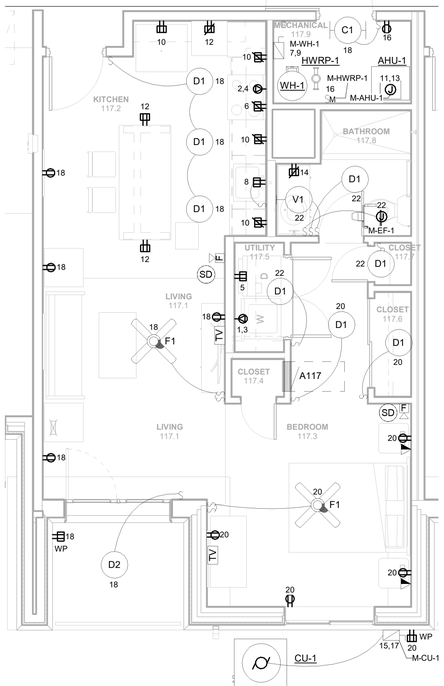

4 ELECTRICAL PLAN - EFFICIENCY APARTMENT

1/4" = 1'-0"

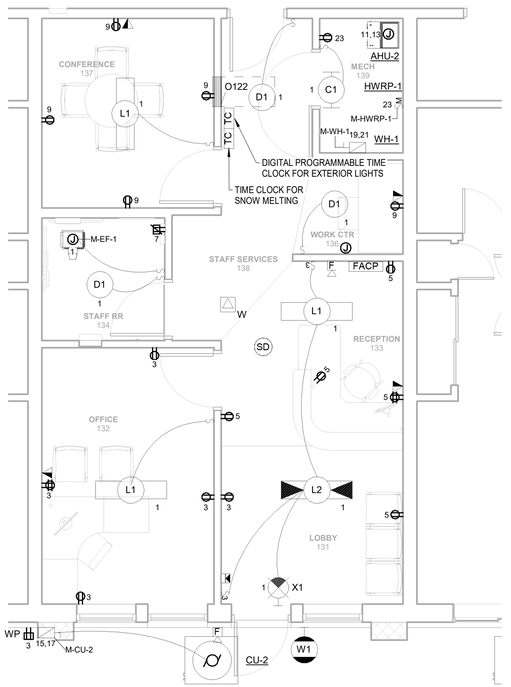

6 ELECTRICAL PLAN - STAFF OFFICE

1/4" = 1'-0"

JSRa
JOHNSON SMITTHIPONG & ROSAMOND ASSOCIATES, INC.
5210 E Williams Cir • Ste 600 • Tucson, AZ 85711 •
(520) 547-7904 www.jsrarchinc.com

Consultants:

Bernhard TME Engineering
2990 N. Swan Road
Suite 227
Tucson, Arizona 85712
Phone: (520) 323-2381
tme@bernhardtme.com

ISSUED FOR INTERIM REVIEW

THIS DOCUMENT IS NOT TO BE USED FOR REGULATORY APPROVAL, PERMIT, OR CONSTRUCTION

Vernon Rosamond
Arizona Lic #: 9793
Date: 8/13/24

iHOUSE APARTMENTS

Tonalea, AZ 86044

U. S. DEPARTMENT OF HEALTH AND HUMAN SERVICES
INDIAN HEALTH SERVICE
DIVISION OF ENGINEERING SERVICES
SEATTLE / DALLAS

No.	Date	Description

Issue Date:	8/13/24
Project No:	23-390
Scale:	1/4" = 1'-0"
Drawn By:	Author
Checked By:	Checker

PHASE IV (Final CD)

Sheet Title:

PARTIAL ELECTRICAL PLANS

Sheet Number:

E401

Autodesk Docs://23-390 IHS iHouse Apt v2023/05-24-0004-BTME MEPF-RVT23.rvt
8/12/2024 11:41:59 AM

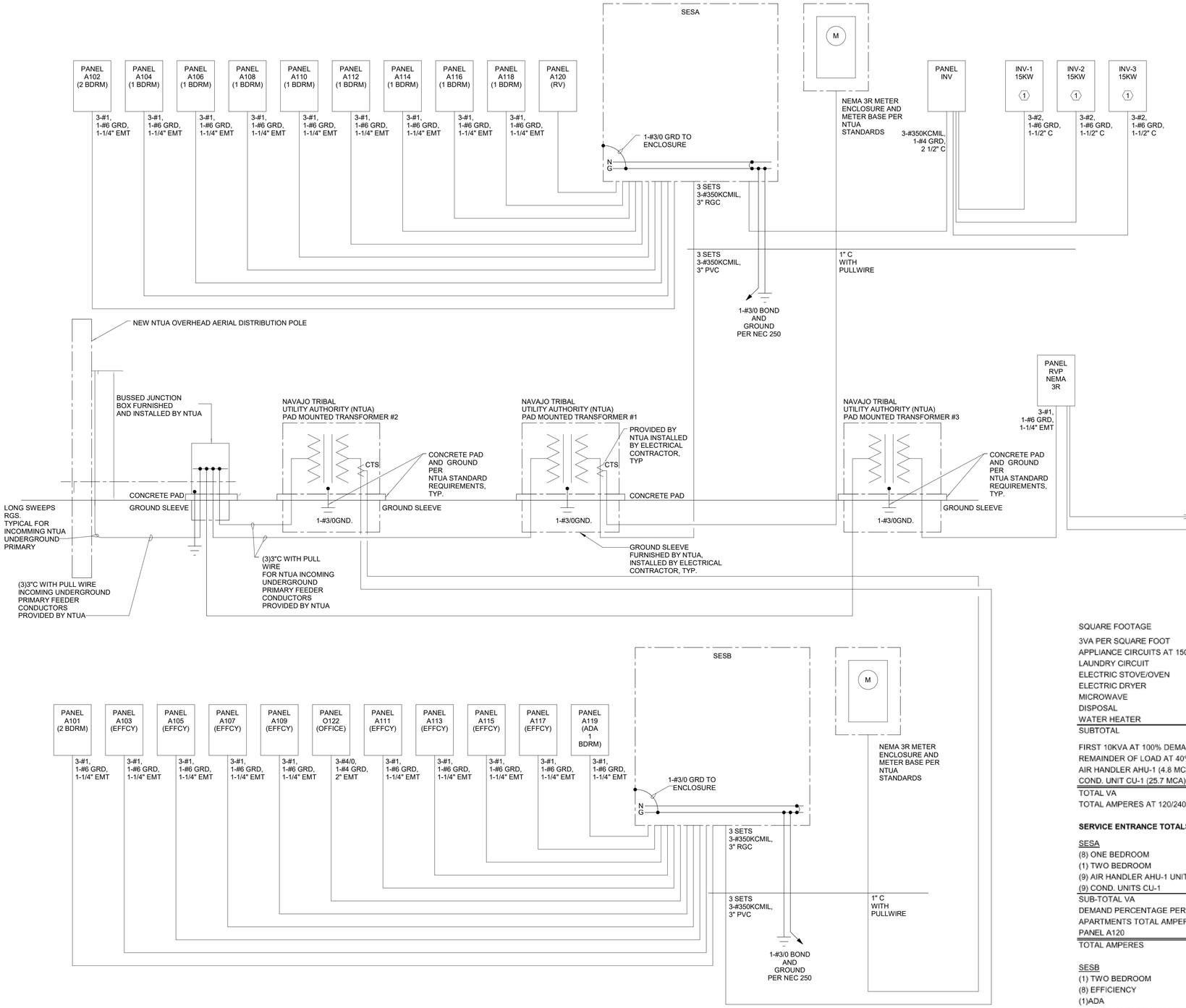

1 ONE-LINE DIAGRAM - ELECTRICAL
NOT TO SCALE

GENERAL NOTES:

A. CONTRACTOR TO PROVIDE GROUNDING SYSTEM FOR ALL SINGLE-PHASE PAD-MOUNTED TRANSFORMERS PER NTUA 2014 UNDERGROUND ELECTRIC CONSTRUCTION STANDARDS DRAWING CM-28.
B. CONTRACTOR TO PROVIDE SINGLE-PHASE TRANSFORMER PADS PER NTUA 2014 UNDERGROUND ELECTRICAL CONSTRUCTION STANDARDS DRAWING CM-12.
C. CONTRACTOR TO PROVIDE SWITCHING CUBICLE PAD PER NTUA 2014 UNDERGROUND ELECTRICAL CONTRUCTION STANDARDS DRAWING CM-11 FOR 35KV BUSSED JUNCTION BOXES.

LOAD CALCULATIONS

	EFFICIENCY	ONE BEDROOM	TWO BEDROOM	ADA UNIT
SQUARE FOOTAGE	601	819	1,079	912
3VA PER SQUARE FOOT	1,803	2,457	3,237	2,736
APPLIANCE CIRCUITS AT 1500VA EA	3,000	3,000	3,000	3,000
LAUNDRY CIRCUIT	1,500	1,500	1,500	1,500
ELECTRIC STOVE/OVEN	7,680	7,680	7,680	7,680
ELECTRIC DRYER	5,000	5,000	5,000	5,000
MICROWAVE	1,500	1,500	1,500	1,500
DISPOSAL	1,127	1,127	1,127	1,127
WATER HEATER	6,000	6,000	6,000	6,000
SUBTOTAL	27,610	28,264	29,044	28,543
FIRST 10KVA AT 100% DEMAND	10,000	10,000	10,000	10,000
REMAINDER OF LOAD AT 40% DEMAND	7,044	7,306	7,618	7,417
AIR HANDLER AHU-1 (4.8 MCA) AT 100% DEMAND	922	922	922	922
COND. UNIT CU-1 (25.7 MCA) AT 100% DEMAND	4,934	4,934	4,934	4,934
TOTAL VA	22,900	23,162	23,474	23,273
TOTAL AMPERES AT 120/240V - 1 PHASE	95.4 A	96.5 A	97.8 A	97.0 A

SERVICE ENTRANCE TOTALS

SESA

(8) ONE BEDROOM	8 x	28,264 =	226,112 VA
(1) TWO BEDROOM	1 x	29,044 =	29,044 VA
(9) AIR HANDLER AHU-1 UNITS	9 x	922 =	8,298 VA
(9) COND. UNITS CU-1	9 x	4,934 =	44,406 VA
SUB-TOTAL VA			307,860 VA
DEMAND PERCENTAGE PER NEC 220.84 @ 43%			132,380 VA
APARTMENTS TOTAL AMPERES			551.6 A
PANEL A120			94 A
TOTAL AMPERES			645.6 A

SESB

(1) TWO BEDROOM	1 x	29,044 =	29,044 VA
(8) EFFICIENCY	8 x	27,610 =	220,880 VA
(1)ADA	1 x	28,543 =	28,543 VA
(10) AIR HANDLER AHU-1 UNITS	10 x	922 =	9,220 VA
(10) COND. UNITS CU-1	10 x	4,934 =	49,340 VA
SUB-TOTAL VA			337,027 VA
DEMAND PERCENTAGE PER NEC 220.84 @ 43%			144,922 VA
APARTMENTS TOTAL AMPERES			603.8 A
PANEL O122			95 A
TOTAL AMPERES			698.8 A

JSRa
JOHNSON SMITTHIPONG & ROSAMOND ASSOCIATES, INC.
5210 E Williams Cir • Ste 600 • Tucson, AZ 85711 •
(520) 547-7904 www.jsrarchinc.com

Consultants:

Bernhard TME Engineering
2990 N. Swan Road
Suite 227
Tucson, Arizona 85712
Phone: (520) 323-2381
tme@bernhardtme.com

ISSUED FOR INTERIM REVIEW
THIS DOCUMENT IS NOT TO BE USED FOR REGULATORY APPROVAL, PERMIT, OR CONSTRUCTION
Vernon Rosamond
Arizona Lic #: 9793
Date: 8/13/24

iHOUSE APARTMENTS

Tonalea, AZ 86044

U. S. DEPARTMENT OF HEALTH AND HUMAN SERVICES
INDIAN HEALTH SERVICE
DIVISION OF ENGINEERING SERVICES
SEATTLE / DALLAS

No.	Date	Description

Issue Date: 8/13/24
Project No: 23-390
Scale: NOT TO SCALE
Drawn By: Author
Checked By: Checker

PHASE IV (Final CD)

Sheet Title:
ONE-LINE DIAGRAM - ELECTRICAL

Sheet Number:
E601

Autodesk Docs://23-390 IHS iHouse Apt v2023/05-24-0004-BTME MEPF-RVT23.rvt
8/12/2024 11:41:59 AM

Switchboard: SESA

Location: BUILDING EXTERIOR
Supply From: NTUA TRANSFORMER #1
Mounting: SURFACE
Enclosure: NEMA 3R

Volts: 120/240 Single
Phases: 1
Wires: 3
Manufacturer/Type: SQUARE-D HCR-U OR APPROVED EQUAL

A.I.C. Rating: 25,000
Mains Type: MCB
Mains Rating: 1200 A
MCB Rating: 1200 A BRANCH MOUNTED, BACK-FED MCB 80% RATED

Notes:
SERVICE ENTRANCE RATED.

CKT	Circuit Description	# of Poles	Frame Size	Trip Rating	Load	Remarks
1	MAIN CIRCUIT BREAKER	2	1200 A	900 A	0 VA	PG FRAME
2	PANEL A120	2	250 A	225 A	0 VA	JD FRAME
3	PANEL A118	2	150 A	150 A	0 VA	HD FRAME
4	PANEL A116	2	150 A	150 A	0 VA	HD FRAME
5	PANEL A114	2	150 A	150 A	0 VA	HD FRAME
6	PANEL A112	2	150 A	150 A	0 VA	HD FRAME
7	PANEL A110	2	150 A	150 A	0 VA	HD FRAME
8	PANEL A108	2	150 A	150 A	0 VA	HD FRAME
9	PANEL A106	2	150 A	150 A	0 VA	HD FRAME
10	PANEL A104	2	150 A	150 A	0 VA	HD FRAME
11	PANEL A102	2	150 A	150 A	0 VA	HD FRAME
12	PANEL INV	2	400 A	300 A	0 VA	LD FRAME
13	SPACE	1	--	--	--	
14	SPACE	1	--	--	--	
15	SPACE	1	--	--	--	
16	SPACE	1	--	--	--	
17	SPACE	1	--	--	--	
18	SPACE	1	--	--	--	
				Total Amps:		REFER TO LOAD CALCULATIONS

Legend:

Load Classification					
REFER TO LOAD CALCULATIONS SHEET E601					

Notes:

Switchboard: SESB

Location: BUILDING EXTERIOR
Supply From: NTUA TRANSFORMER #2
Mounting: SURFACE
Enclosure: NEMA 3R

Volts: 120/240 Single
Phases: 1
Wires: 3
Manufacturer/Type: SQUARE-D HCR-U OR APPROVED EQUAL

A.I.C. Rating: 25,000
Mains Type: MCB
Mains Rating: 1200 A
MCB Rating: 1200 A BRANCH MOUNTED, BACK-FED MCB 80% RATED

Notes:
SERVICE ENTRANCE RATED.

CKT	Circuit Description	# of Poles	Frame Size	Trip Rating	Load	Remarks
1	MAIN CIRCUIT BREAKER	2	1200 A	1000 A	0 VA	PG FRAME
2	PANEL A119	2	150 A	150 A	0 VA	HD FRAME
3	PANEL A117	2	150 A	150 A	0 VA	HD FRAME
4	PANEL A115	2	150 A	150 A	0 VA	HD FRAME
5	PANEL A113	2	150 A	150 A	0 VA	HD FRAME
6	PANEL A111	2	150 A	150 A	0 VA	HD FRAME
7	PANEL O122	2	250 A	250 A	0 VA	HD FRAME
8	PANEL A109	2	150 A	150 A	0 VA	HD FRAME
9	PANEL A107	2	150 A	150 A	0 VA	HD FRAME
10	PANEL A105	2	150 A	150 A	0 VA	HD FRAME
11	PANEL A103	2	150 A	150 A	0 VA	HD FRAME
12	PANEL A101	2	150 A	150 A	0 VA	HD FRAME
13	SPACE	1	--	--	--	
14	SPACE	1	--	--	--	
15	SPACE	1	--	--	--	
16	SPACE	1	--	--	--	
17	SPACE	1	--	--	--	
18	SPACE	1	--	--	--	
				Total Amps:		REFER TO LOAD CALCULATIONS

Legend:

Load Classification					
REFER TO LOAD CALCULATIONS SHEET E601					

Notes:

Branch Panel: A120

Location: Space 13
Supply From:
Mounting: RECESSED
Enclosure: NEMA 1

Volts: 120/240 Single
Phases: 1
Wires: 3

A.I.C. Rating: 22,000
Bus Rating: 150 A
MCB Rating: MLO

Notes:
* INDICATES GFI CIRCUIT BREAKER

CKT	Circuit Description	Trip (A)	Poles	A		B		Poles	Trip (A)	Circuit Description	CKT
1	RCPT- ELECTRIC DRYER	30	2	2500	1500			1	20	RCPT- RV BATHROOM 120	2
3	--	--	--			2500	1500	1	20	RCPT- RV BATHROOM 122	4
5	RCPT- WASHER	20	1	1500	360			1	20	*SNOW/ICE MELTING- GUTTER, DOWNSPOUT	6
7	WH-1 - MECHANICAL ROOM	40	2			3000	360	1	20	*SNOW/ICE MELTING- GUTTER, DOWNSPOUT	8
9	--	--	--	3000	180			1	20	*SNOW/ICE MELTING- GUTTER, DOWNSPOUT	10
11	CU-3	30	2			1325	180	1	20	*SNOW/ICE MELTING- GUTTER, DOWNSPOUT	12
13	--	--	--	1325	360			1	20	*SNOW/ICE MELTING- GUTTER, DOWNSPOUT	14
15	ELECTRIC HEATER EH-1	20	2			1500	360	1	20	*SNOW/ICE MELTING- GUTTER, DOWNSPOUT	16
17	--	--	--	1500	220			2	20	*SNOW/ICE MELTING- WALKWAY	18
19	LTS/RCPT- RV BATHROOM 120, LAUNDRY	20	1			634	220	--	--	--	20
21	LTS/RCPT- RV BATHROOM 120, MECH.	20	1	800	220			2	20	*SNOW/ICE MELTING- WALKWAY	22
23	RCPT- MECHANICAL ROOM	20	1			230	220	--	--	--	24
25	SPARE	20	1	0	--			1	--	SPACE	26
27	SPACE	--	1			--	--	1	--	SPACE	28
29	SPACE	--	1	--	--			1	--	SPACE	30
31	SPACE	--	1			--	--	1	--	SPACE	32
33	SPACE	--	1	--	--			1	--	SPACE	34
35	SPACE	--	1			--	--	1	--	SPACE	36
37	SPACE	--	1	--	--			1	--	SPACE	38
39	SPACE	--	1			--	--	1	--	SPACE	40
41	SPACE	--	1	--	--			1	--	SPACE	42
			Total Load:	13465 VA		12029 VA					
			Total Amps:	112 A		100 A					

Load Classification	Connected Load	Demand Factor	Estimated Demand	Panel Totals	
Lighting	1222 VA	100.00%	1222 VA		
RECEPTACLES	9860 VA	100.00%	9860 VA	**Total Conn. Load:**	25494 VA
POWER, OTHER	14412 VA	100.00%	14412 VA	**Total Est. Demand:**	25494 VA
				Total Conn. Current:	71 A
				Total Est. Demand Current:	106 A

Branch Panel: INV

Location:
Supply From:
Mounting: RECESSED
Enclosure: NEMA 1

Volts: 120/240 Single
Phases: 1
Wires: 3

A.I.C. Rating: 22,000
Bus Rating: 400 A
MCB Rating: 300 A

Notes:

CKT	Circuit Description	Trip (A)	Poles	"A" PHASE (VA)		"B" PHASE (VA)		Poles	Trip (A)	Circuit Description	CKT
1	INV-1	100	2	90	--			1	--	SPACE	2
3	--	--	--			90	--	1	--	SPACE	4
5	INV-2	100	2	90	--			1	--	SPACE	6
7	--	--	--			90	--	1	--	SPACE	8
9	INV-3	100	2	90	--			1	--	SPACE	10
11	--	--	--			90	--	1	--	SPACE	12
13	SPACE	--	1	--	--			1	--	SPACE	14
15	SPACE	--	1			--	--	1	--	SPACE	16
17	SPACE	--	1	--	--			1	--	SPACE	18
19	SPACE	--	1			--	--	1	--	SPACE	20
21	SPACE	--	1	--	--			1	--	SPACE	22
23	SPACE	--	1			--	--	1	--	SPACE	24
		Total Load:		270 VA		270 VA					
		Total Amps:		2 A		2 A					

Load Classification	Connected Load	Demand Factor	Estimated Demand	Panel Totals	
POWER, OTHER	540 VA	100.00%	540 VA		
				Total Conn. Load:	540 VA
				Total Est. Demand:	540 VA
				Total Conn. Current:	2 A
				Total Est. Demand Current:	2 A

JSRa
JOHNSON SMITTHIPONG & ROSAMOND ASSOCIATES, INC.
5210 E Williams Cir • Ste 600 • Tucson, AZ 85711 •
(520) 547-7904 www.jsrarchinc.com

Consultants:

Bernhard TME Engineering
2990 N. Swan Road
Suite 227
Tucson, Arizona 85712
Phone: (520) 323-2381
tme@bernhardtme.com

ISSUED FOR INTERIM REVIEW
THIS DOCUMENT IS NOT TO BE USED FOR REGULATORY APPROVAL, PERMIT, OR CONSTRUCTION
Vernon Rosamond
Arizona Lic #: 9793
Date: 8/13/24

iHOUSE APARTMENTS

Tonalea, AZ 86044

U. S. DEPARTMENT OF HEALTH AND HUMAN SERVICES
INDIAN HEALTH SERVICE
DIVISION OF ENGINEERING SERVICES
SEATTLE / DALLAS

No.	Date	Description

Issue Date:	8/13/24
Project No:	23-390
Scale:	
Drawn By:	Author
Checked By:	Checker

PHASE IV (Final CD)

Sheet Title:

PANEL SCHEDULES - ELECTRICAL

Sheet Number:

E602

Autodesk Docs://23-390 IHS iHouse Apt v2023/05-24-0004-BTME MEPF-RVT23.rvt
8/12/2024 11:41:59 AM

Branch Panel: A102

Location: Space 83 | **Supply From:** | **Mounting:** RECESSED | **Enclosure:** NEMA 1
Volts: 120/240 Single | **Phases:** 1 | **Wires:** 3
A.I.C. Rating: 22,000 | **Bus Rating:** 150 A | **MCB Rating:** MLO

Notes:
SCHEDULE TYPICAL FOR ALL TWO BEDROOM APARTMENTS. REFER TO LOAD CALCULATIONS FOR DEMAND LOADS SHOWN ON SHEET E601.

CKT	Circuit Description	Trip (A)	Poles	"A" PHASE (VA)		"B" PHASE (VA)		Poles	Trip (A)	Circuit Description	CKT
1	RCPT- ELECTRIC DRYER	30	2	2500	3840			2	40	RCPT- RANGE KITCHEN	2
3	--	--	--			2500	3840	--	--	--	4
5	RCPT- WASHER	40	1	180	1500			1	20	RCPT- MICROWAVE	6
7	WH-1 - MECHANICAL ROOM	20	2			3000	1127	1	20	RCPT- DISPOSAL	8
9	--	--	--	3000	915			1	20	RCPT- KITCHEN	10
11	AHU-2	20	2			396	915	1	20	RCPT- KITCHEN	12
13	--	--	--	396	1500			1	20	RCPT- BATHROOM	14
15	CU-1	30	2			2100	1500	1	20	RCPT- BATHROOM	16
17	--	--	--	2100	1550			1	15	RCPT- MECHANICAL ROOM	18
19	SPACE	--	1			--	1728	1	15	LTS/RCPT- MECH., KITCHEN, DINING, LIVING RM	20
21	SPACE	--	1	--	1497			1	15	LTS/RCPT- BEDROOM 2, CLOSET 2, BATHROOM	22
23	SPACE	--	1			--	1856	1	15	LTS/RCPT- BEDROOM 1, CLOSET 1, BATHROOM	24
		Total Load:		18978 VA		18963 VA					
		Total Amps:		158 A		158 A					

Load Classification	Connected Load	Demand Factor	Estimated Demand	Panel Totals	
Lighting	1421 VA	100.00%	1421 VA		
RECEPTACLES	25447 VA	69.65%	17724 VA	**Total Conn. Load:**	37941 VA
POWER, OTHER	11074 VA	100.00%	11074 VA	**Total Est. Demand:**	30217 VA
				Total Conn. Current:	105 A
				Total Est. Demand Current:	126 A

Branch Panel: A112

Location: Space 42 | **Supply From:** | **Mounting:** RECESSED | **Enclosure:** NEMA 1
Volts: 120/240 Single | **Phases:** 1 | **Wires:** 3
A.I.C. Rating: 22,000 | **Bus Rating:** 150 A | **MCB Rating:** MLO

Notes:
SCHEDULE TYPICAL FOR ALL ONE BEDROOM APARTMENTS. REFER TO LOAD CALCULATIONS FOR DEMAND LOADS SHOWN ON SHEET E601.

CKT	Circuit Description	Trip (A)	Poles	"A" PHASE (VA)		"B" PHASE (VA)		Poles	Trip (A)	Circuit Description	CKT
1	RCPT- ELECTRIC DRYER	30	2	2500	3840			2	40	RCPT- RANGE KITCHEN	2
3	--	--	--			2500	3840	--	--	--	4
5	RCPT- WASHER	20	1	1500	1500			1	20	RCPT- MICROWAVE	6
7	WH-1 - MECHANICAL ROOM	40	2			3000	1127	1	20	RCPT- DISPOSAL	8
9	--	--	--	3000	1360			1	20	RCPT- KITCHEN	10
11	AHU-1	20	2			90	720	1	20	RCPT- KITCHEN	12
13	--	--	--	90	1500			1	20	RCPT- BATHROOM	14
15	CU-1	30	2			1416	1550	1	15	RCPT- MECHANICAL ROOM	16
17	--	--	--	1416	1426			1	15	LTS/RCPT- MECH., KITCHEN, DINING, LIVING RM	18
19	SPACE	--	1			--	1327	1	15	LTS/RCPT- BEDROOM 112.10, CLOSET 112.11	20
21	SPACE	--	1	--	899			1	15	LTS/RCPT- HALL, BATHROOM, CLOSET 112.5	22
23	SPACE	--	1			--	--	1	--	SPACE	24
		Total Load:		19031 VA		15570 VA					
		Total Amps:		159 A		130 A					

Load Classification	Connected Load	Demand Factor	Estimated Demand	Panel Totals	
Lighting	813 VA	100.00%	813 VA		
RECEPTACLES	24547 VA	70.37%	17274 VA	**Total Conn. Load:**	34602 VA
POWER, OTHER	9242 VA	100.00%	9242 VA	**Total Est. Demand:**	27328 VA
				Total Conn. Current:	96 A
				Total Est. Demand Current:	114 A

Branch Panel: A117

Location: Space 160 | **Supply From:** | **Mounting:** RECESSED | **Enclosure:** NEMA 1
Volts: 120/240 Single | **Phases:** 1 | **Wires:** 3
A.I.C. Rating: 22,000 | **Bus Rating:** 150 A | **MCB Rating:** MLO

Notes:
SCHEDULE TYPICAL FOR ALL EFFICIENCY APARTMENTS. REFER TO LOAD CALCULATIONS FOR DEMAND LOADS SHOWN ON SHEET E601.

CKT	Circuit Description	Trip (A)	Poles	"A" PHASE (VA)		"B" PHASE (VA)		Poles	Trip (A)	Circuit Description	CKT
1	RCPT- ELECTRIC DRYER	30	2	3000	3840			2	40	RCPT- RANGE KITCHEN	2
3	--	--	--			3000	3840	--	--	--	4
5	RCPT- WASHER	20	1	1500	1500			1	20	RCPT- MICROWAVE	6
7	WH-1 - MECHANICAL ROOM	40	2			0	1127	1	20	RCPT- DISPOSAL	8
9	--	--	--	0	1360			1	20	RCPT- KITCHEN	10
11	AHU-1	20	2			90	540	1	20	RCPT- KITCHEN	12
13	--	--	--	90	1500			1	20	RCPT- BATHROOM	14
15	CU-1	30	2			1416	1550	1	15	RCPT- MECHANICAL ROOM	16
17	--	--	--	1416	1034			1	15	LTS/RCPT- MECH., KITCHEN, DINING, LIVING RM	18
19	SPACE	--	1			--	980	1	15	LTS/RCPT- BEDROOM, CLOSET 117.6	20
21	SPACE	--	1	--	555			1	15	LTS/RCPT- HALL, BATHROOM, CLOSET 117.7	22
23	SPACE	--	1			--	--	1	--	SPACE	24
		Total Load:		15794 VA		12543 VA					
		Total Amps:		132 A		105 A					

Load Classification	Connected Load	Demand Factor	Estimated Demand	Panel Totals	
Lighting	753 VA	100.00%	753 VA		
RECEPTACLES	24507 VA	70.40%	17254 VA	**Total Conn. Load:**	28338 VA
POWER, OTHER	3078 VA	100.00%	3078 VA	**Total Est. Demand:**	21084 VA
				Total Conn. Current:	79 A
				Total Est. Demand Current:	88 A

Branch Panel: A119

Location: Space 177 | **Supply From:** | **Mounting:** RECESSED | **Enclosure:** NEMA 1
Volts: 120/240 Single | **Phases:** 1 | **Wires:** 3
A.I.C. Rating: 22,000 | **Bus Rating:** 150 A | **MCB Rating:** MLO

Notes:
SCHEDULE TYPICAL FOR ALL ONE BEDROOM ADA APARTMENTS. REFER TO LOAD CALCULATIONS FOR DEMAND LOADS SHOWN ON SHEET E601.

CKT	Circuit Description	Trip (A)	Poles	"A" PHASE (VA)		"B" PHASE (VA)		Poles	Trip (A)	Circuit Description	CKT
1	RCPT- ELECTRIC DRYER	30	2	2500	5650			2	40	RCPT- RANGE KITCHEN	2
3	--	--	--			2500	5650	--	--	--	4
5	RCPT- WASHER	20	1	1500	1500			1	20	RCPT- MICROWAVE	6
7	WH-1 - MECHANICAL ROOM	40	2			3000	1127	1	20	RCPT- DISPOSAL	8
9	--	--	--	3000	915			1	20	RCPT- KITCHEN	10
11	AHU-1	20	2			3120	915	1	20	RCPT- KITCHEN	12
13	--	--	--	3120	1500			1	20	RCPT- BATHROOM	14
15	CU-1	30	2			1416	50	1	15	RCPT- MECHANICAL ROOM	16
17	--	--	--	1416	1697			1	15	LTS/RCPT- BEDROOM, CLOSET	18
19	SPACE	--	1			--	967	1	15	LTS/RCPT- BEDROOM, CLOSET	20
21	SPACE	--	1	--	542			1	15	LTS/RCPT- BATHROOM, CLOSET	22
23	SPACE	--	1			--	--	1	--	SPACE	24
		Total Load:		23340 VA		18745 VA					
		Total Amps:		195 A		156 A					

Load Classification	Connected Load	Demand Factor	Estimated Demand	Panel Totals	
Lighting	786 VA	100.00%	786 VA		
RECEPTACLES	26112 VA	69.15%	18056 VA	**Total Conn. Load:**	42085 VA
POWER, OTHER	15188 VA	100.00%	15188 VA	**Total Est. Demand:**	34029 VA
				Total Conn. Current:	117 A
				Total Est. Demand Current:	142 A

Branch Panel: RVP

Location: | **Supply From:** NTUA TRANSFORMER #3 | **Mounting:** RECESSED | **Enclosure:** NEMA 1
Volts: 120/240 Single | **Phases:** 1 | **Wires:** 3
A.I.C. Rating: 22,000 | **Bus Rating:** 150 A | **MCB Rating:** MLO

Notes:

CKT	Circuit Description	Trip (A)	Poles	"A" PHASE (VA)		"B" PHASE (VA)		Poles	Trip (A)	Circuit Description	CKT
1	RVP-1	20	2	4800	--			1	--	SPACE	2
3	--	--	--			4800	--	1	--	SPACE	4
5	RVP-2	20	2	4800	--			1	--	SPACE	6
7	--	--	--			4800	--	1	--	SPACE	8
9	RVP-3	20	2	4800	--			1	--	SPACE	10
11	--	--	--			4800	--	1	--	SPACE	12
13					--			1	--	SPACE	14
15							--	1	--	SPACE	16
17					--			1	--	SPACE	18
19							--	1	--	SPACE	20
21											22
23											24
		Total Load:		14400 VA		14400 VA					
		Total Amps:		120 A		120 A					

Load Classification	Connected Load	Demand Factor	Estimated Demand	Panel Totals	
POWER, OTHER	28800 VA	100.00%	28800 VA		
				Total Conn. Load:	28800 VA
				Total Est. Demand:	28800 VA
				Total Conn. Current:	80 A
				Total Est. Demand Current:	120 A

Branch Panel: O122

Location: Space 132 | **Supply From:** | **Mounting:** RECESSED | **Enclosure:** NEMA 1
Volts: 120/240 Single | **Phases:** 1 | **Wires:** 3
A.I.C. Rating: 22,000 | **Bus Rating:** 225 A | **MCB Rating:** MLO

Notes:
* INDICATES GFI CIRCUIT BREAKER

CKT	Circuit Description	Trip (A)	Poles	"A" PHASE (VA)		"B" PHASE (VA)		Poles	Trip (A)	Circuit Description	CKT
1	LTS- OFFICE	20	1	242	790			1	20	LTS- CORRIDOR/EGRESS	2
3	RCPT- OFFICE 126	20	1			1260	1440	1	20	RCPT- CORRIDOR	4
5	RCPT- LOBBY, RECEPTION	20	1	1080	339			1	20	LTS- EXTERIOR	6
7	RCPT- STAFF BATHROOM	20	1			1500	398	1	20	LTS- CANOPY, PARKING	8
9	RCPT- CONFERENCE 1224M, WORK CTR 129	20	1	900	360			1	20	*SNOW/ICE MELTING- GUTTER, DOWNSPOUT	10
11	AHU-2	20	2			317	360	1	20	*SNOW/ICE MELTING- GUTTER, DOWNSPOUT	12
13	--	--	--	317	360			1	20	*SNOW/ICE MELTING- GUTTER, DOWNSPOUT	14
15	CU-2	20	2			1699	360	1	20	*SNOW/ICE MELTING- GUTTER, DOWNSPOUT	16
17	--	--	--	1699	360			1	20	*SNOW/ICE MELTING- GUTTER, DOWNSPOUT	18
19	WH-1 - MECHANICAL ROOM	20	2			1500	220	2	20	*SNOW/ICE MELTING- WALKWAY	20
21	--	--	--	1500	220			--	--	--	22
23	RCPT- MECHANICAL ROOM	20	1			230	220	2	20	*SNOW/ICE MELTING- WALKWAY	24
25	DOOR POWER SUPPLY	20	1	250	220			--	--	--	26
27	SPACE	--	1			--	1000	1	20	*SNOW/ICE MELTING- WALKWAY	28
29	SPACE	--	1	--	1000			1	20	*SNOW/ICE MELTING- WALKWAY	30
		Total Load:		9636 VA		10504 VA					
		Total Amps:		80 A		88 A					

Load Classification	Connected Load	Demand Factor	Estimated Demand	Panel Totals	
Lighting	1752 VA	100.00%	1752 VA		
RECEPTACLES	6360 VA	100.00%	6360 VA	**Total Conn. Load:**	20140 VA
POWER, OTHER	11394 VA	100.00%	11394 VA	**Total Est. Demand:**	20140 VA
MOTOR EQUIPMENT	634 VA	100.00%	634 VA	**Total Conn. Current:**	56 A
				Total Est. Demand Current:	84 A

JSRa
JOHNSON SMITTHIPONG & ROSAMOND ASSOCIATES, INC.
5210 E Williams Cir • Ste 600 • Tucson, AZ 85711 •
(520) 547-7904 www.jsrarchinc.com

Consultants:

Bernhard TME Engineering
2990 N. Swan Road
Suite 227
Tucson, Arizona 85712
Phone: (520) 323-2381
tme@bernhardtme.com

ISSUED FOR INTERIM REVIEW
THIS DOCUMENT IS NOT TO BE USED FOR REGULATORY APPROVAL, PERMIT, OR CONSTRUCTION
Vernon Rosamond
Arizona Lic #: 9793
Date: 8/13/24

iHOUSE APARTMENTS

Tonalea, AZ 86044

U. S. DEPARTMENT OF HEALTH AND HUMAN SERVICES
INDIAN HEALTH SERVICE
DIVISION OF ENGINEERING SERVICES
SEATTLE / DALLAS

No.	Date	Description

Issue Date:	8/13/24
Project No:	23-390
Scale:	
Drawn By:	Author
Checked By:	Checker

PHASE IV (Final CD)

Sheet Title:

PANEL SCHEDULES - ELECTRICAL

Sheet Number:

E603

Autodesk Docs://23-390 IHS iHouse Apt v2023/05-24-0004-BTME MEPF-RVT23.rvt
8/12/2024 11:42:00 AM